AGS Complex Machine Studies (AGS Studies Report No. 288) Stopband Correction of the AGS Booster 2Qy=9 Correction Data before May 7
Study Period: March 28 - May 7, 1993
Participants: C. Gardner and Y. Shoji
Reported by: Y. Shoji
Machine: AGS Booster User1 and User3
Aim: Correction of the half-integer resonance 2Qy=9.

All data points before the installation of 9th harmonic sextupole are listed in Table I. The correction currents of 2Qy=9; N(cos9Y) and N(sin9Y), depended on many parameters; B, dB/dt, dR(=dP/P), C.O.D. and chromaticities.

We measured B and dB/dt dependence two times. The data points were fitted with functions;

$$N(\cos 9Y) = Co + Cb\,B + Cbt\,(dB/dt)$$
$$N(\sin 9Y) = So + Sb\,B + Sbt\,(dB/dt)\,. \qquad (1)$$

The results are listed in Table II. The units of parameters are the same as those for 2Qx=9 [Shoji and Gardner, AGS SR-287].

The data of the radial dependence of correction currents were fitted with functions;

$$N(\cos 9Y) = Co + Cr\,dRset$$
$$N(\sin 9Y) = So + Sr\,dRset\,. \qquad (2)$$

The results are listed in Table III.

Table I List of 2Qy=9 correction data.

date and other information	T (ms)	B (kG)	dB/dt (G/ms)	dRset (cm)	N(cos9Y)	N(sin9Y)	crossing speed (dQ/ms)	residual loss(%) /cross times
last year [Gardner, AGS SR-273]								
		1.7	0	?	400	50	.024	< 1/1
Mar.30 u1 10turns Qx=4.6								
	40	1.622	22	?	290 ±30	-160 ±20	0.018	2.5/1
					390 ±10	-180 ±20	0.01	30/2
Apr.05 u1 10t 200ns Qx=4.82 chrom=-0.5,-0.25 *1) =-1,-1 *2)								
	35	1.572	5	?	235 ± 5	-45 ± 5	0.008	37/1 *1)
					235 ± 5	-45 ± 5	0.008	36/1 *2)
Apr.14 u1 5t chrom=-0.5,-0.25 Qx=4.6								
	35	1.97	70	?	750 ±40	-550 ±30	0.012	26/?
	55	3.34	70	?	900 ±10	-500 ±10	0.008	9/?
	75	4.74	70	?	1000	-400	0.004	20/?
	101	4.95	-70	?	350	500	0.015	16/?
Apr.15								
	30	1.59	31	?	640 +15	-270 +15	0.03	20/2
Apr.25 u1 chrom=-0.5.-0.25 Qx=4.8								
	28.1	1.53	30	0.35	480 ±15	-215 ±10	0.05	8/1
	30	1.60	31	0.35	465 ±10	-235 ±10	0.04	10/1
	40.1	2.09	70	0.35	685 ±10	-510 ±10	0.04	4/1
	45.4	2.40	70	0.35	750 ±10	-500 ±20	0.04	1/1

Apr.28 u3 5t 60deg. 3rd--off Qx=4.6

80	1.70	0	-0.6	365 ±10	-70 ±10	0.02	8/?
			-0.1	340 ±10	-95 ±10	0.02	7/?
			0.4	300 ±10	-105 ±10	0.02	7/?
			0.9	260 ±10	-120 ±10	0.02	5/?
			1.4	220 ±10	-110 ±10	0.02	6/?

May 7 u3 all sext = OFF, dump bump = OFF Qx=4.78

80	1.70	0	-0.6	345 ±10	-80 ±10	0.01	15/1
			0.4	280 ±10	-110 ±10	0.01	15/1
			1.4	190 ±10	-120 ±10	0.01	19/1

Table II Correction coefficients of 2Qy=9. The data on May 20 came from the measurement of 9th normal sextupole corrections [Shoji and Gardner, AGS SR-298].

date	Co	Cb	Cbt	X^2/f
cos9Y				
Apr.14	250±87	90±21	4.94±0.38	0.772
Apr.25	66±50	199±45	2.93±0.82	3.18
May 20	138±11	91± 4	3.36±0.07	2.68
date	**So**	**Sb**	**Sbt**	**X^2/f**
sin9Y				
Apr.14	-206±76	50±18	-6.54±0.36	0.359
Apr.25	-21 ±78	13±69	-7.54±1.08	0.989
May 20	-43±12	39± 4	-6.30±0.09	4.84

Table III dR dependence (B=1.7kG, dB/dt=0)

date	cos9Y			sin9Y		
	Co	Cr	X^2/f	So	Sr	X^2/f
Apr.28	326.6±5.2	-74.0±6.3	0.30	-92.4±5.2	-29.0±6.3	0.225
May 7	302.7±6.4	-77.5±7.1	1.04	-95.3±6.4	-20.0±7.1	0.667

I Dependence on the Chromaticity

On April 5 we changed the chromaticity but the correction currents of 2Qy=9 did not change.

$$\delta N(\cos 9Y) = 0 \pm 7 \quad \delta N(\sin 9Y) = 0 \pm 7$$
$$\text{for } \delta\xi x = 0.75\,, \quad \delta\xi y = 0.5$$

But we observed a change of the correction currents of 2Qx=9 by changing the chromaticities [Shoji & Gardner, AGS SR-287].

$$\delta N(\cos 9X) = -58 \pm 18 \quad \delta N(\sin 9X) = 105 \pm 17$$
$$\text{for } \delta\xi x = 1.568\,, \quad \delta\xi y = 0.623 \qquad \text{on April 30}$$

$$\delta N(\cos 9X) = -60 \pm 30 \quad \delta N(\sin 9X) = 10 \pm 20$$
$$\text{for } \delta\xi x = 1.068\,, \quad \delta\xi y = 0.373 \qquad \text{on April 8}$$

Any horizontal orbit distortion at the sextupole magnets can produce a dependence of half integer resonances on chromaticities. A rough model assuming a random orbit distortion predicts that $\delta N(9Y)/\delta\xi y = \delta N(9X)/\delta\xi x$. Because both of the horizontal orbit distortion and the dispersion are roughly proportional to $\sqrt{\beta x}$ and a tune change by the chromaticity sextupoles corresponds to a stop band width. Here

$$N(9Y)^2 \equiv N(\sin 9Y)^2 + N(\sin 9Y)^2$$
$$N(9X)^2 \equiv N(\sin 9X)^2 + N(\sin 9X)^2\,.$$

But the results were;

$\delta N(9Y) / \delta\xi y$	=	0 ± 20	on April 5
$\delta N(9X) / \delta\xi x$	=	77 ± 16	on April 30
$\delta N(9X) / \delta\xi x$	=	61 ± 34	on April 8 .

The change of 2Qy=9 correction looked much smaller than that of 2Qx=9. The horizontal closed orbit distortion was not able to be considered to be random.

II Radius Dependence

The correction currents of 2Qy=9 also depended on radius like that of 2Qx=9. The measurements on April 28 and May 7 agreed very well as listed on Table III. They were measured under almost the same conditions. The dependence on radius was almost linear because the linear fit was good.

III B and dB/dt Dependence

The coefficients of B and dB/dt dependence are listed on Table II. They did not agree with each other within the error. But the data were not taken under the same condition.

The data on April 25 was taken under the same condition as that of data on April 28. At those times all sextupoles (except back-leg windings) were turned off. For the cross check we calculated the correction currents for the special case; B=1.7kG, dB/dt=0, dRset=0.35, chromaticity sextupoles = OFF. The results were;

N(cos9Y) = 404±92	N(sin9Y) = 1 ±141	from April 25
N(cos9Y) = 300± 6	N(sin9Y) =-102 ± 6	from April 28 .

They agreed within the errors but errors were rather big.

IV Orthogonality of cos9Y and sin9Y

We had got two different answers for the same corrections on March 30. Then we suspect the orthogonality of cos9Y string and sin9Y string.

V Correlation between 2Qx=9 Correction

There may be a correlation between the corrections for 2Qx=9 and for 2Qy=9 because any quadrupole imperfection may excite both resonances. The correction data for 2Qx=9, which measured date were close to that of 2Qy=9, were picked up from a data table [Shoji & Gardner, AGS SR-287] and listed in Table IV and are plotted in Fig.1-5.

There were no correlations between 2Qx=9 and 2Qy=9. That means that the corrections are sum of more than one quadrupole error. The difference of weight function (ß) produces the difference of correction currents. The only exception is Cr and Sr. Their phase; Sr/Cr are the same for 2Qx=9 and 2Qy=9. That can be produced by only one sextupole field error. And the change by date, from the clear symbols to the shaded symbols in the Figures, were roughly the same for both 2Qx=9 and 2Qy=9.

Table IV Comparison of N(9X); correction for 2Qx=9 and N(9Y); correction for 2Qy=9.

date	string	Co	Cb	Cbt	Cr	X^2/f
Apr.12	cos9X	23±97	38±23	7.3±0.5		0.73
	sin9X	-28±98	120±23	-1.9±0.5		0.08
Apr.14	cos9Y	250±87	90±21	4.9±0.4		0.77
	sin9Y	-206±76	50±18	-6.5±0.4		0.36
Apr.25	cos9X	104±92	85±78	5.7±1.2		2.09
	sin9X	127±75	42±64	-1.5±1.1		0.70
Apr.25	cos9Y	66±50	199±45	2.9±0.8		3.18
	sin9Y	-21±78	13±69	-7.5±1.1		0.99
Apr.27	cos9X	226± 9			-96± 9	0.27
	sin9X	146± 7			-38± 7	2.25
Apr.28	cos9Y	327± 6			-74± 6	0.30
	sin9Y	-92± 6			-29± 6	0.23
May 07	cos9X	217± 7			-104± 9	1.24
	sin9X	122±12			-38±11	0.29
May 07	cos9Y	303± 7			-78± 8	1.04
	sin9Y	-95± 7			-20± 7	0.67

FIGURE CAPTIONS

Fig. 1 Scattering plot in Co and So space.

Fig. 2 Scattering plot in Cb and Sb space.

Fig. 3 Scattering plot in Cbt and Sbt space.

Fig. 4 Scattering plot in Co and So space.

Fig. 5 Scattering plot in Cr and Sr space.

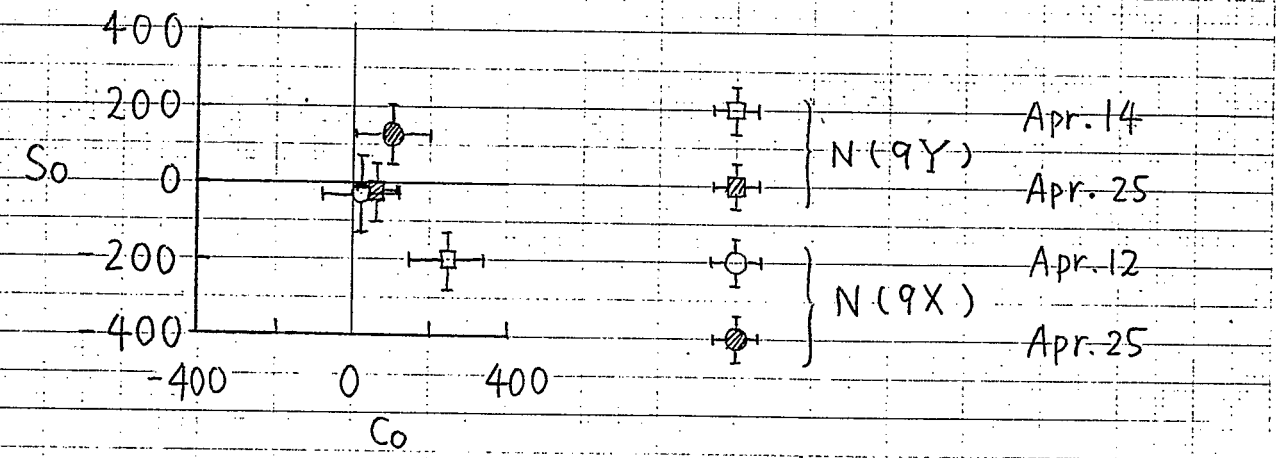

Fig. 1

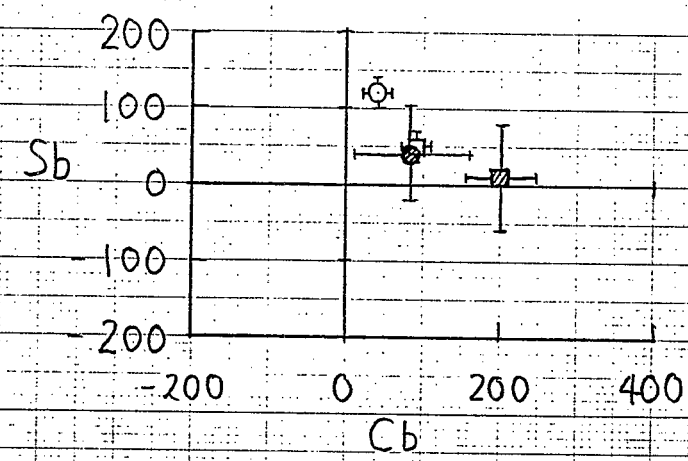

Fig. 2

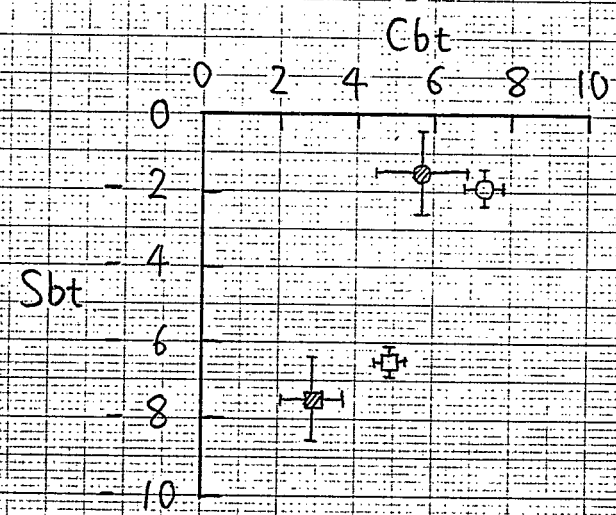

Fig. 3

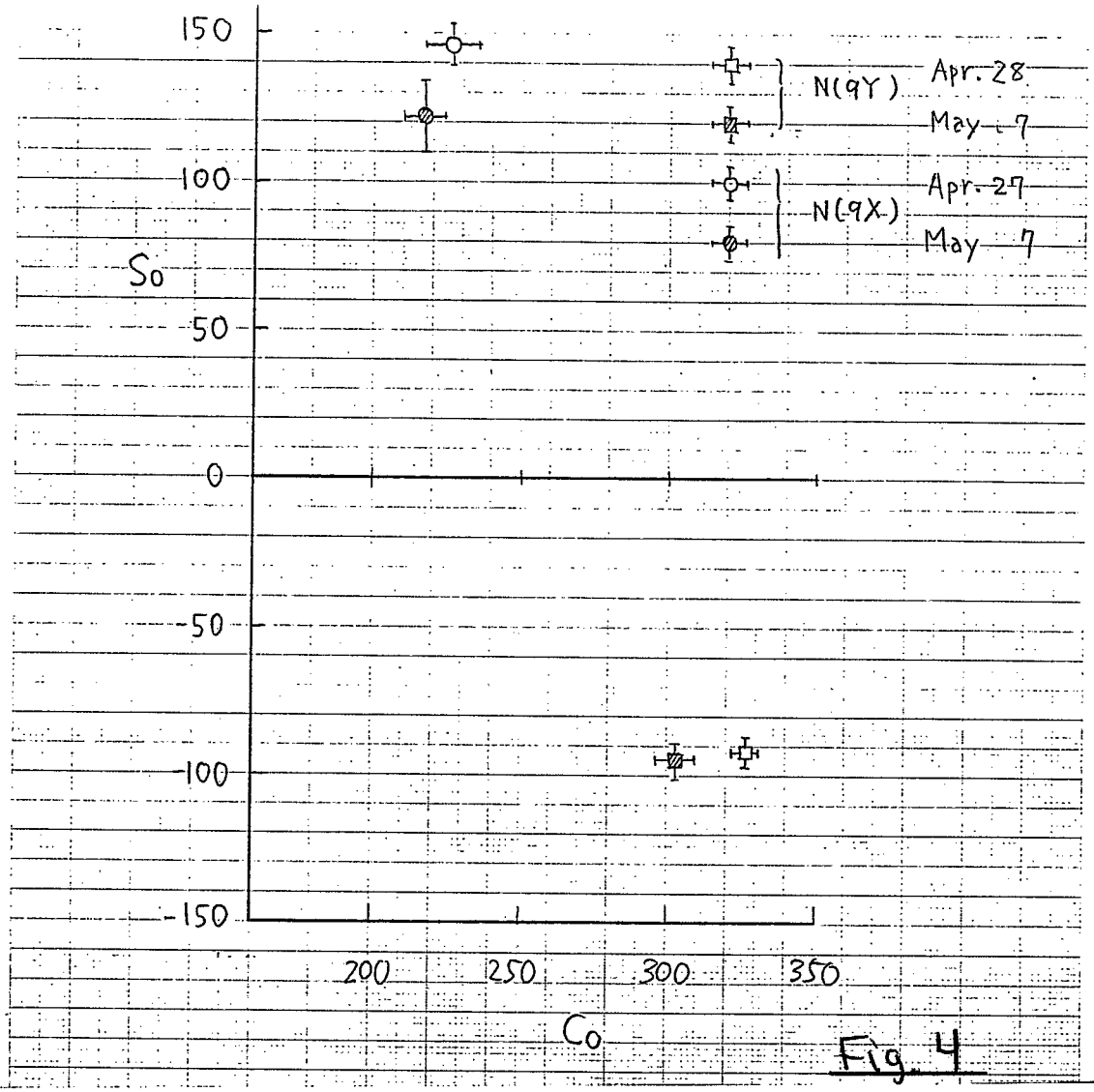

Fig. 4

JIS A4 180×250mm
1耗目方眼 No. 112

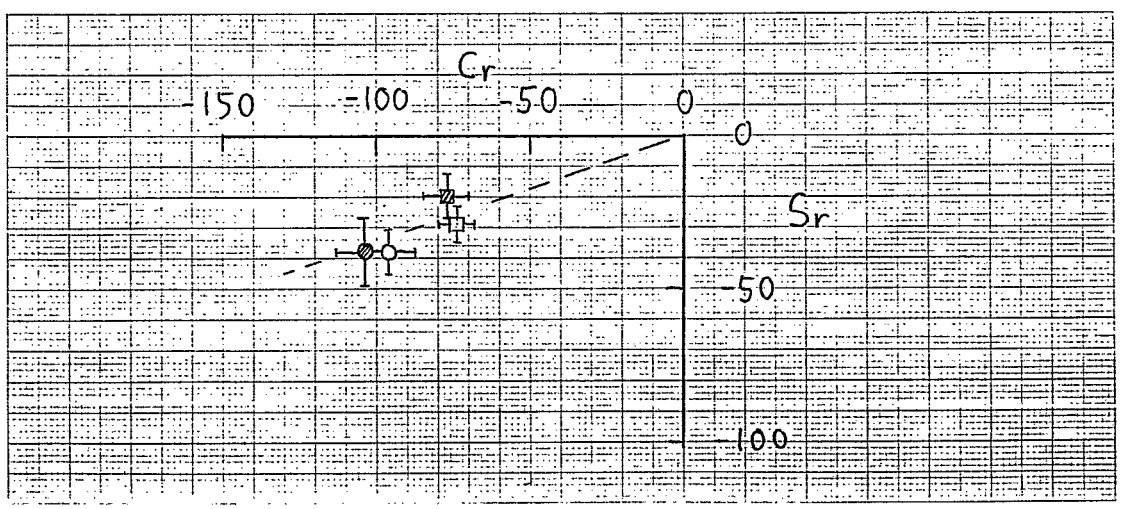

Fig. 5