REDESIGN OF BOOSTER BAND II CAVITY

BOOSTER TECHNICAL NOTE
NO. 232

M. METH

July 26, 1999

ALTERNATING GRADIENT SYNCHROTRON DEPARTMENT
BROOKHAVEN NATIONAL LABORATORY
UPTON, NEW YORK 11973

REDESIGN OF BOOSTER BAND II CAVITY

Introduction

The present Booster Band II Cavity consists of 66 ferrite rings, symmetrically arranged to form 1 gap per cavity. Frequency tuning of the cavity requires a figure of eight loop to provide the bias (or tuning) current for the ferrite.

It has been proposed to redesign the cavity with two gaps per cavity, eliminating the need for the figure of eight winding. Bias (or tuning) current would flow in a path formed between the beam pipe, bus bars and cavity structure as implemented in the Proton Cavity (Band III) and is illustrated in Figure 1.

A second objective for the new design is to increase the cavity voltage from a nominal 17KV to 30KV. The length of the cavity is fixed; the diameter of the cavity can be increased to at least 100 cm. The present ferrite rings are TDK's SY7 and sized 50cm. OD, 25cm. ID, and 2.54cm. thick. To accommodate an increase in voltage the OD of the rings must increase to at least 80cm to provide sufficient cross-section area for the magnetic flux.

The two gap cavity using the ferrite bias scheme of figure 1 is a conventional construction project. However, increasing the ferrite rings beyond 50cm is a major problem. A survey of ferrite manufacturers indicates that pressed ferrite rings are limited to a maximum OD of 50cm due to press size and oven apertures.

Large Diameter Ferrite Rings

A number of options exist for the fabrication of large diameter (greater that 50cm.) ferrite rings. A synopsis of these options follow:

1. Rings of 50cm to 100cm can be manufactured but are extremely expensive. The 50cm limit is due to press size and (more important) oven aperture. The maximum aperture is 100cm.; allowing four - 50cm. rings to be processed simultaneously. Only one 50cm. to 100cm. ring can be processed at one time.

2. Simultaneously process a number (generally 8 or 12) of sectors and glue the radii of the sectors to form a circle. This will leave 8 or 12 air gaps in the magnetic circuit, increasing the reluctance of the path and decreasing the affective permeability of the ferrite.

   With 12 gaps of 1 mil to 2 mil per gap (which has been achieved at Lawrence Berkeley Laboratory during the Star Wars Program on 100cm. rings) the maximum μ of the SY7 is decreased from 2200 to a range of 1335 to 1662. With tuning and a frequency span of 10 to 1, the minimum μ is decreased from 22 to 21.85 due to the air gaps.

3. Use the existing uniform 25-50cm. ring and add a concentric ring of 50cm. ID and 80cm. OD, fabricated from 12-30° sectors. The air gaps in the outer ring, will decrease the effective μ and impose a magnetic boundary condition at the separatrix between the two layers. The flux density in the outer ring is decreased by a factor that ranges from 0.64 to 0.76 due to the air gaps at zero bias or zero tuning current,; rf frequency is 0.6 MHZ. The flux density is not affected by the air gaps with maximum tuning current; rf frequency is 5.5.MHZ.

4. The 50cm limit is removed by the use of tape wound magnetic cores. Magnetic material is sandwiched between insulative layers, forming a thin tape referred to as Met glass. The tape is wrapped on a core to build up a magnetic ring. Hitachi's product FINEMET has been used in constructing a Barrier Cavity by KEK. Cooling is achieved by blowing air between the cores. They can also be water cooled by circulating high resistivity water through the cavity. It is not clear if Finemet wound cores can be incorporated with circulating water in edge-cooled plates. Typically Finemet is a tunable, very low Q material; FT-3 has a Q in the range of 0.5 to 0.7 in the frequency range of 2 to 4mhz. Cut core Finemet has a higher Q by a factor of 10, but cannot be tuned. It should be considered for the design of the Barrier Cavity.

Modifications of Existing Cavity

The most economical proposal is to add a concentric ring 50cm. ID 80cm. OD to the existing structure. The outer ring is TDK SY7., allowing a common tuning loop for the two concentric rings. The ring is constructed by gluing 12 sectors along the radii to form a circle. Each gap is taken to add 0.1mm of air to the magnetic path. The total air gap is 1.2mm. The 0.1 mm/gap is conservative. Experience at LBL[1], during the Star Wars Program, with a 12 sector ring indicated an air gap of 1 mil/gap (or 0.3mm total).

Performance

The performance of the original and the modified cavity has been calculated and is summarized in Table I. Two calculations have been performed for the modified cavity. The first calculation neglects the air gap; the second uses an air gap of 1.2mm. This comparison permits a determination of the effects of a large air gap. As discussed previously the projected performance of the modified gap lies between these two calculations.

1 Private conversation with Louis Reginato, Lawrence Berkeley Laboratory.

Table I

Performance of Original and Modified Cavity

PARAMETER	ORIGINAL CAVITY	MODIFIED CAVITY	
		NEGLECT AIR GAP	AIR GAP 1.2 MM
Cavity Voltage	17KV	30KV	30KV
Number of Gaps	1	2	2
Number of Rings per Gap	66	33	33
Inner Ring OD ID	50 CM 25 CM	50 CM 25 CM	50 CM 25 CM
Outer Ring OD ID	- -	80 CM 50 CM	80 CM 50 CM
Ring Thickness t	2.5 CM	2.5 CM	2.5 CM
Frequency = 0.6 MHZ Flux Distribution B max Pv max (CW) Total Dissipation of Cavity (CW)	 1/x 315 Gauss 180 mw/cc 20.5 KW	 1/x 332 Gauss 200 mw/cc 37.4 KW	 1/x 430 Gauss 333 mw/cc 42 KW
Frequency = 5.5 MHZ Flux Distribution B Max Pv Max (CW) Total Dissipation of Cavity (CW)	 Uniform 24 Gauss 290 mw/cc 70.5 KW	 Uniform 19.2 Gauss 186 mw/cc 139 KW	 Uniform 19.3 Gauss 188 mw/cc 140 KW

These calculations are based on the ferrite parameters supplied by TDK. Figure 2 is a plot of the initial (zero bias) permeability as a function of frequency for various ferrites including the SY7. Figure 3 is a plot of the μQF product as a function of frequency for the SY7. Three plots are shown. They differ by the value of the tuning capacitor employed. This is indicated by the value of fi, the zero bias (or zero tuning current) resonant frequency.

The relevant curve is fi = 0.6MHZ. From Figures 2 and 3 and with zero tuning current (0.6MHZ)

$$\mu QF = 5 \times 10^9$$
$$\mu = 2000$$
$$\mu Q = 8300$$
$$Q = 4.15,$$

and with maximum tuning current (5.5MHZ)

$$\mu QF = 1.5 \times 10^9$$
$$\mu = 23.8$$
$$\mu Q = 272$$
$$Q = 11.4$$

For an estimation of the cavity dissipations the (μQF) product is a vital parameter. For a fixed cavity voltage the loss is inversely proportioned to the (μQF) product. Thus this product is a measure of the resonant impedance of the cavity.

Experience limits water-cooled ferrite to an average dissipation of 200-250 mw/cc; or 400-500mw/cc for a 50% duty factor. The tabulated ferrite dissipation of Table I is on a CW basis, with an average value that is reduced by the duty factor. The projected ferrite dissipation is well within these guide lines.

It is interesting to examine the flux distribution of the modified cavity over an rf cycle. Figure 4A sketches the radial flux distribution, neglecting the air gap in the outer ring, at the beginning and at the end of an rf cycle (or sweep); figure 4B sketches the effect of a 1.2mm air gap. Each one of the four flux-distribution curves represent a cavity voltage (V) of 30 kilo volts. The relationship between the cavity voltage (V) and the radial flux distribution B(x) is

$$V = \omega \ell \int_{r_1}^{r_2} B(x)\, dx$$

ℓ is the length of the ferrite stack
ω is the radian rf frequency

Excitation

Excitation of the two concentric ring structure, with a radial air gap in the outer ring requires special consideration to the interfaces between the two rings at the air gap, see figure 5. The boundary conditions to be satisfied at the interfaces are:

1. normal component of flux density (B) is continuous. This requires that the magnetization in the air gap (H air gap) is μ times the magnetization in the ferrite (H).

$$H \text{ air gap} = \mu H$$

μ is the relative permeability of the ferrites.

2. Tangential component of magnetization (H) is continuous except in the presence of a current sheet, K[2] see figure 5b.

$$H_1 - H_2 = K = \lim_{\substack{J \to \infty \\ \delta \to 0}} J\delta$$

From figure 5a where Ho is the magnetization of the inner ring, Ho cannot be equal to both H and μH as required to satisfy the second boundary condition. Thus a current must be added to the picture to satisfy the boundary condition. This current cannot flow in the ferrite due to its high value of resistivity $>10^6$ ohm-cm

The required current can be provided by inserting a thin-shell copper ring between the two concentric ferrite rings, see figure 5c. By floating the copper ring, eddy currents will flow in the two surfaces of the copper ring. The current in the outer surface will excite the outer ferrite ring. The current (an eddy current), can have an azimuthal distribution and satisfy the second boundary condition. The ring will also provide magnetic isolation between the two concentric rings.

The second boundary condition is derived through the application of Ampere's Circuital Law.

$$\oint H \bullet d\ell = \iint_S J dS = I$$

Thus magnetic fields calculated from Ampere's Circuital Law will satisfy the second boundary conditions.

---

2 The current sheet K is defined as the limiting case of a large current density J and infinitely small skin depth δ.

Applying Ampere's Circuital Law to the configuration of Fig. 5c: first, to the outer surface of the inner ring.

$$H_o = \frac{I}{\ell}$$

$$J_1 = \frac{I}{\delta \ell}$$

Where J, is the current density at the inner surface of the copper shell. δ is the skin depth in the copper ring, ℓ is the nominal periphery of the copper shell.

Then, to the inner surface of the outer ring, including the air gap G.

$$H = \frac{I}{\ell + (\mu - 1)G}$$

Then to the air gap

$$J_2 = \frac{\mu I}{\delta[\ell + (\mu - 1)G]}$$

and finally to the outer ring

$$J_3 = \frac{I}{\delta[\ell + (\mu - 1)G]}$$

Were J_2 and J_3 are the current density at the outer surface of the copper shell.

The total current carried on the outer surface of the copper ring is

$$J_2 \delta G + J_3 \delta [\ell - G] = I$$

Note the azimuthal distribution of the current density on the outer surface and the uniform distribution on the inner surface of the copper ring. The total current on each of the two surfaces are equal, the different azimuthal distributions are connected through the current flow on the two edges of the ring.

The flux density in the two rings are in the ratio of H/H_o.

$$\frac{H}{H_o} = \frac{\ell}{\ell + (\mu - 1)\, G}$$

and the effective permeability (μe) of a ring with an air gap is

$$\mu_e = \frac{\mu\, \ell}{\ell + (\mu - 1)\, G}$$

The copper rings should be high conductivity copper with a thickness of at least 14 skin depths. The ring will provide magnetic shielding between the two ferrite rings. A ring of 50cm. diameter, 1/16" thick electrically isolated from the two adjacent cooling plates is shown in figure 6. The copper rings need not be electrically isolated from the two ferrite cores.

The thin-shell copper rings must be isolated from the two adjacent cooling plates. The nominal voltage between cooling plates is 450 volts, peak. The minimum required insulating strength is 225 volts and is designed for 500 volts, permitting a failure of one of the two insulating layers. Since the minimum sparking potential for air is 400 volts (i.e. the Paschen minimum) the design is reliable.

The eddy current flow and the resulting dissipation is given in Table II. Due to the low value of dissipation and volume of copper no additional cooling need be provided.

Table II

Current and Dissipation of Copper Rings

PARAMETER	FREQUENCY	
	0.6 MHZ	5.5 MHZ
Excitation Current (Peak Value)	13.6 A	125 A
Relative Permeability of Ferrite (μ)	2000	20
Skin Depth of Copper Ring	8.57×10^{-3} CM	2.83×10^{-3} CM
Dissipation CW Basis	146 Milli Watts	310 Milli Watts
Current Density (Peak Value) J_1 J_2 J_3	 $10.14 A/CM^2$ $8032 A/CM^2$ $10.14 A/CM^2$	 $282 A/CM^2$ $5548 A/CM^2$ $277 A/CM^2$

Figure 1

FERRITE BIAS SCHEME USING BUS BARS AND CAVITY STRUCTURE
ARROWS INDICATE BIAS CURRENT

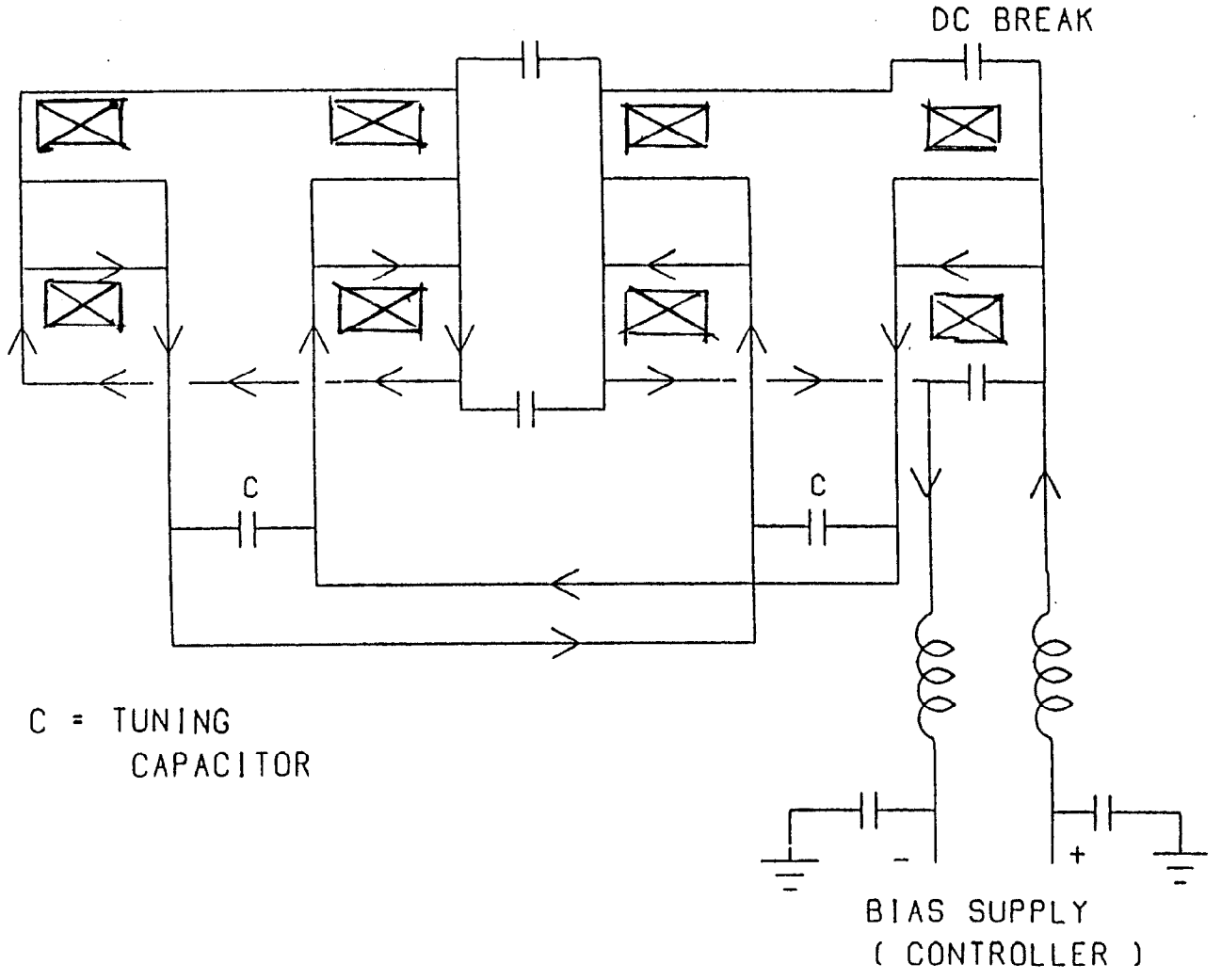

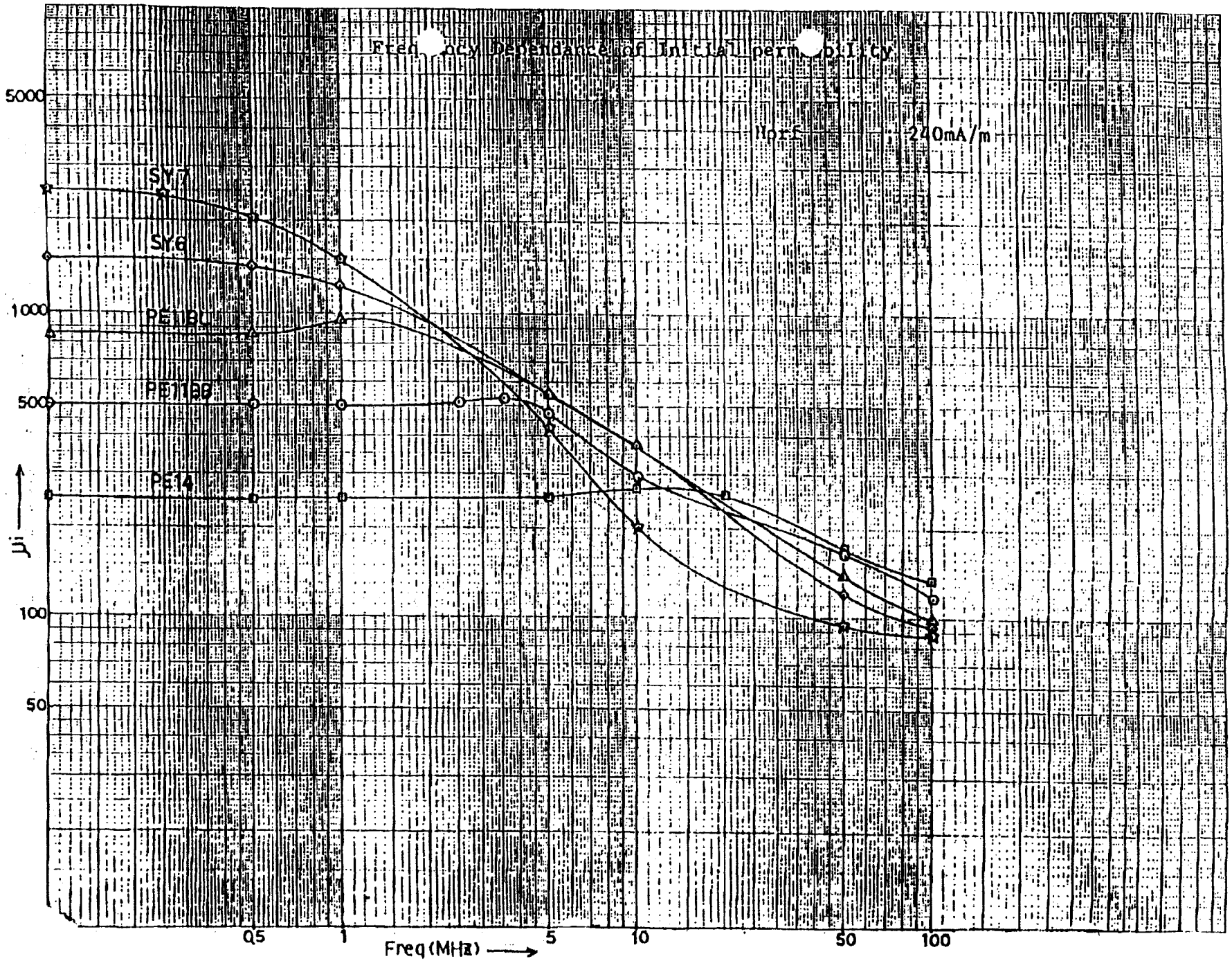

Figure 2

Frequency Dependance of Initial Permability

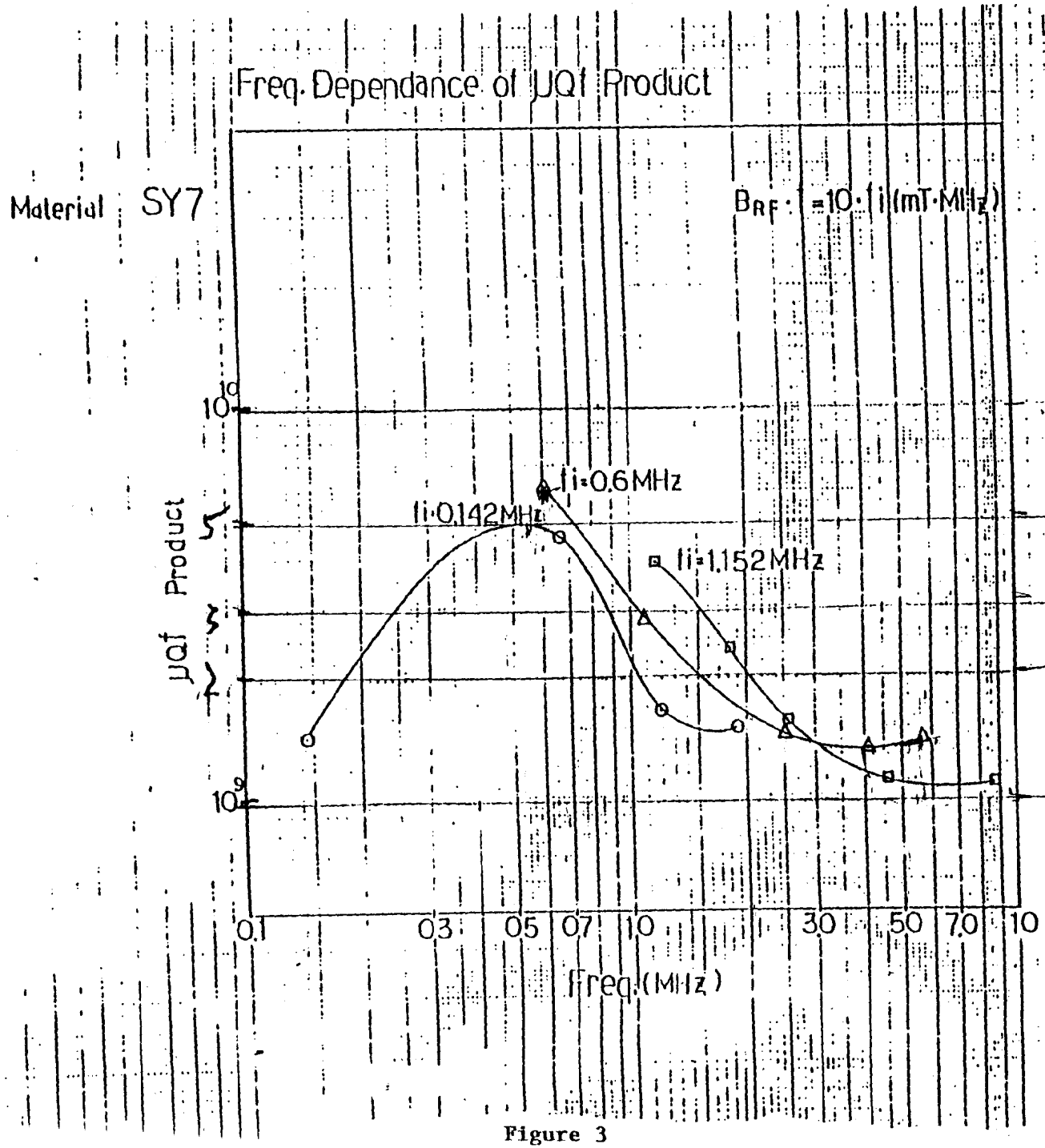
Freq. Dependance of μQf Product
Material SY7
$B_{RF} \cdot f_i = 10 \cdot f_i$ (mT·MHz)
10^{10}
10^{9}
μQf Product
f_i=0.6MHz
f_i=0.142MHz
f_i=1.152MHz
0.1
0.3
0.5
0.7
1.0
3.0
5.0
7.0
10
Freq. (MHz)

Figure 3

BROOKHAVEN NATIONAL LABORATORY

BY_____DATE_____ SUBJECT_____ SHEET NO._____OF_____

CHKD. BY_____DATE_____ JOB NO._____

DEPT. OR PROJECT_____

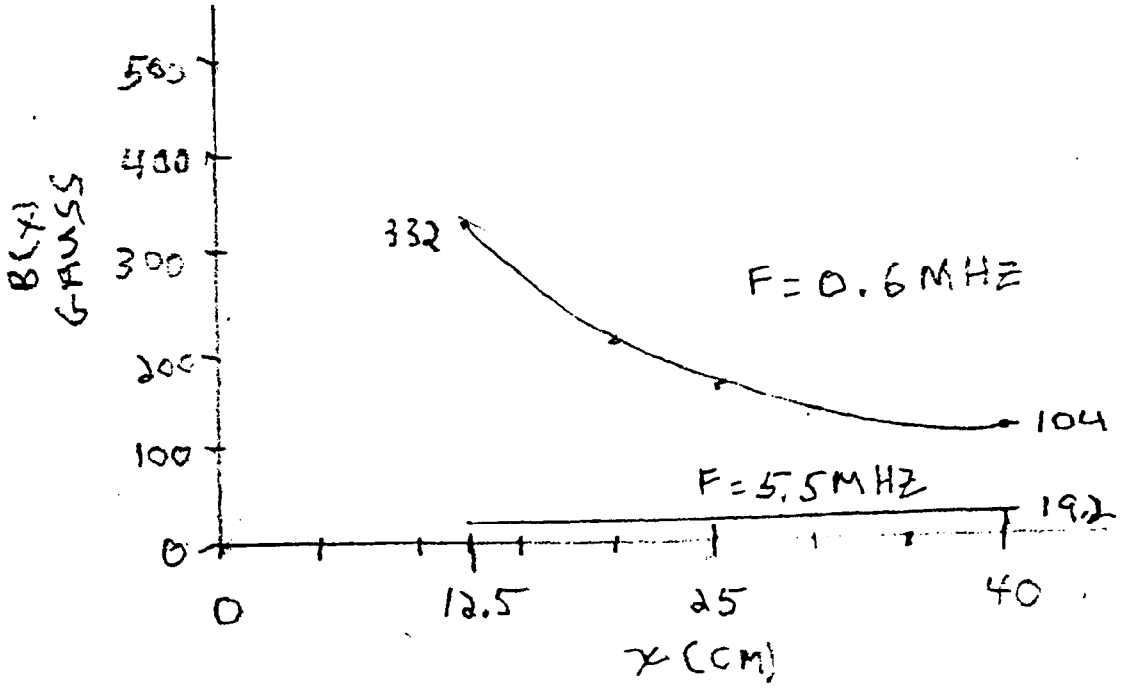

FIG 4A

NEGLECTING AIR GAP

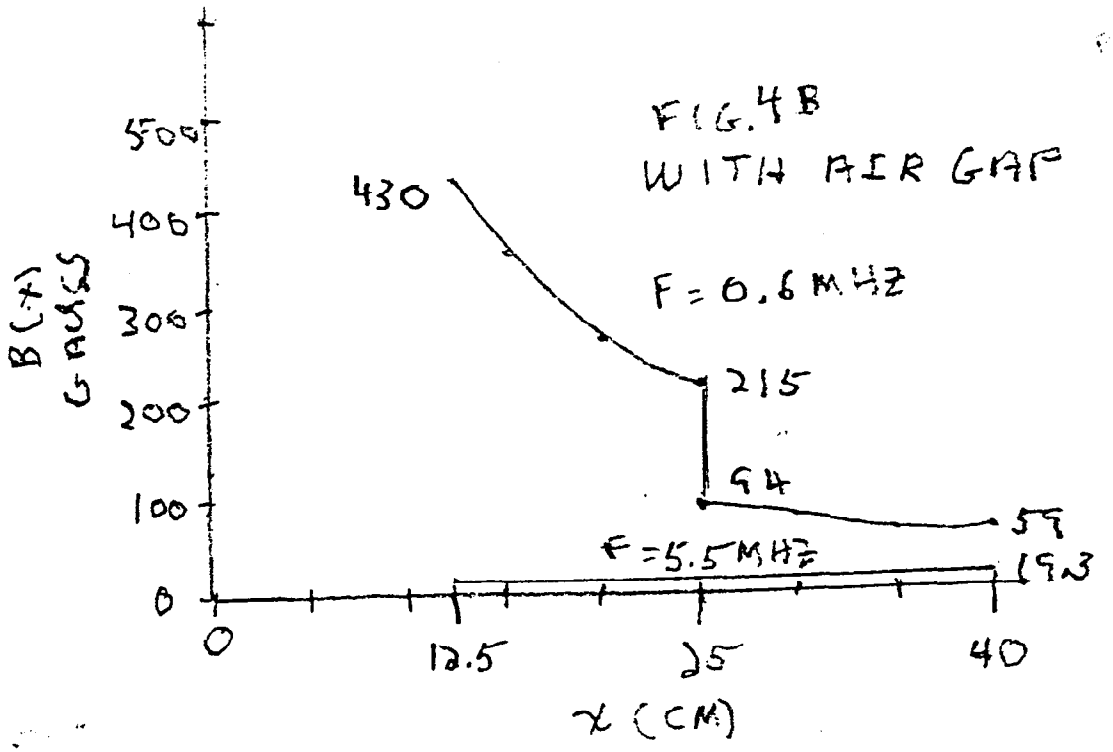

FIGURE 4

RADIAL FLUX DISTRIBUTION

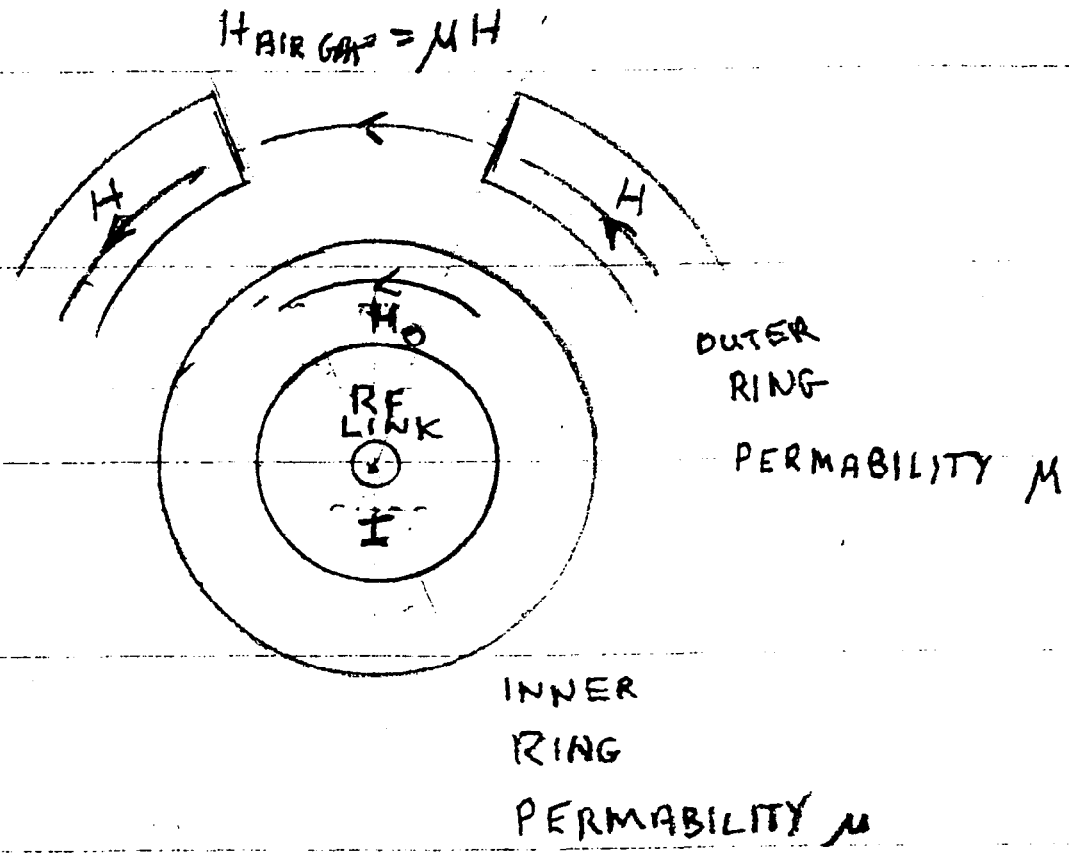

FIG 5A TWO CONCENTRIC RINGS EXCITED BY A CURRENT FLOWING OUT OF THE PLANE OF PAPER

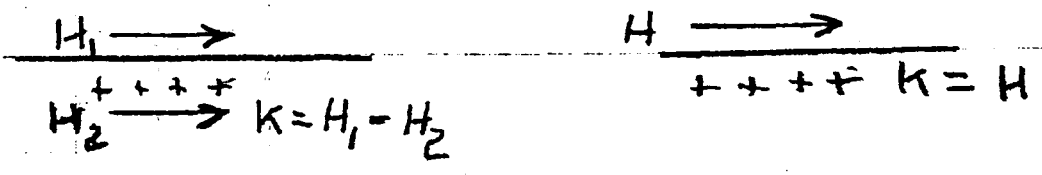

FIG 5B DISCONTINUITY IN TANGENTIAL COMPONENT OF H AT AN INTERFACE.
CURRENT SHEET K FLOWS INTO PLANE OF PAPER

OGILVIE PRESS INC. BROOKLYN 17 N Y
STOCK NO 450

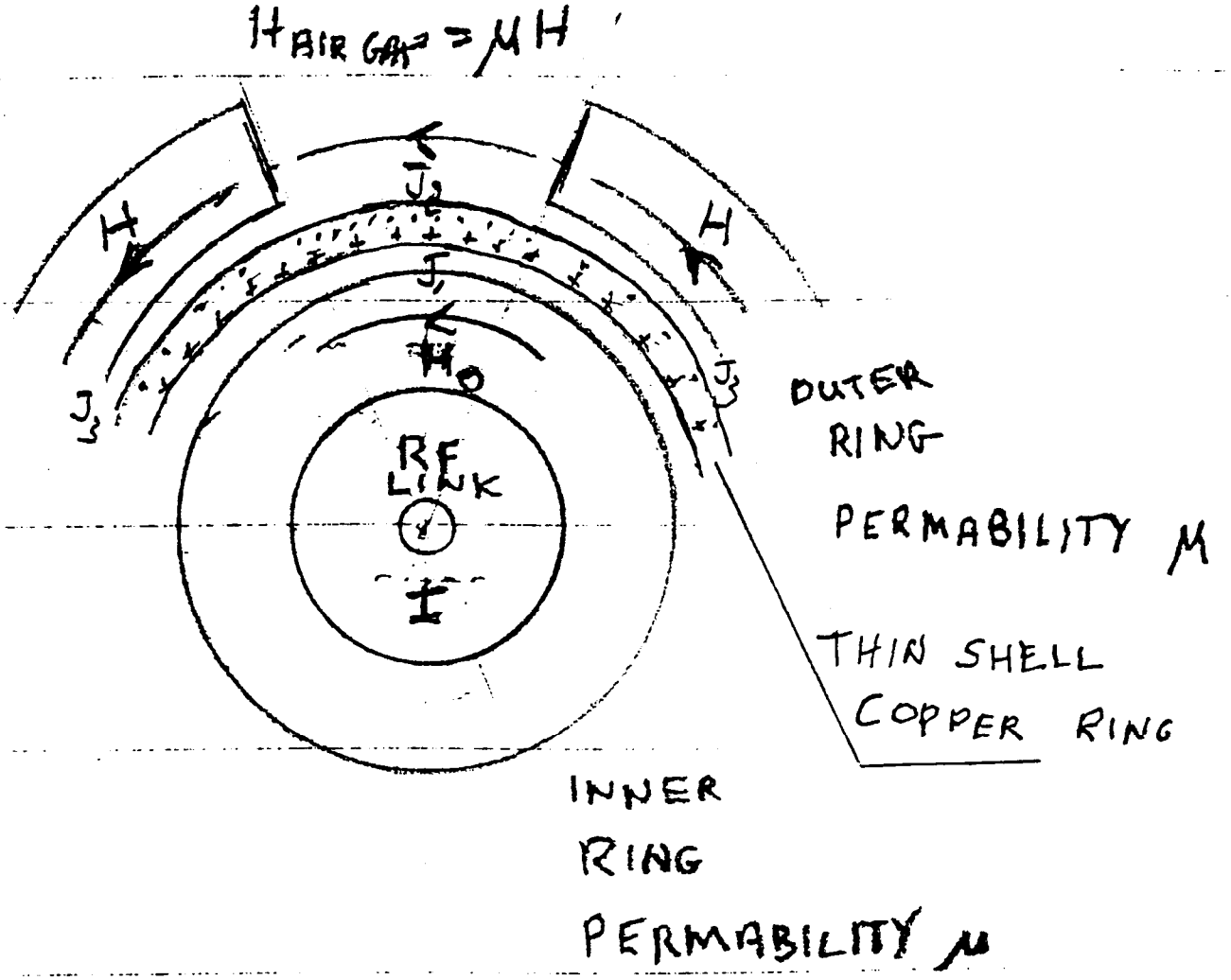

FIG 5C

COPPER SHELL EXCITING OUTER RING

LEGEND + CURRENT FLOWING INTO PLANE OF PAPER

• CURRENT FLOWING OUT OF PLANE OF PAPER

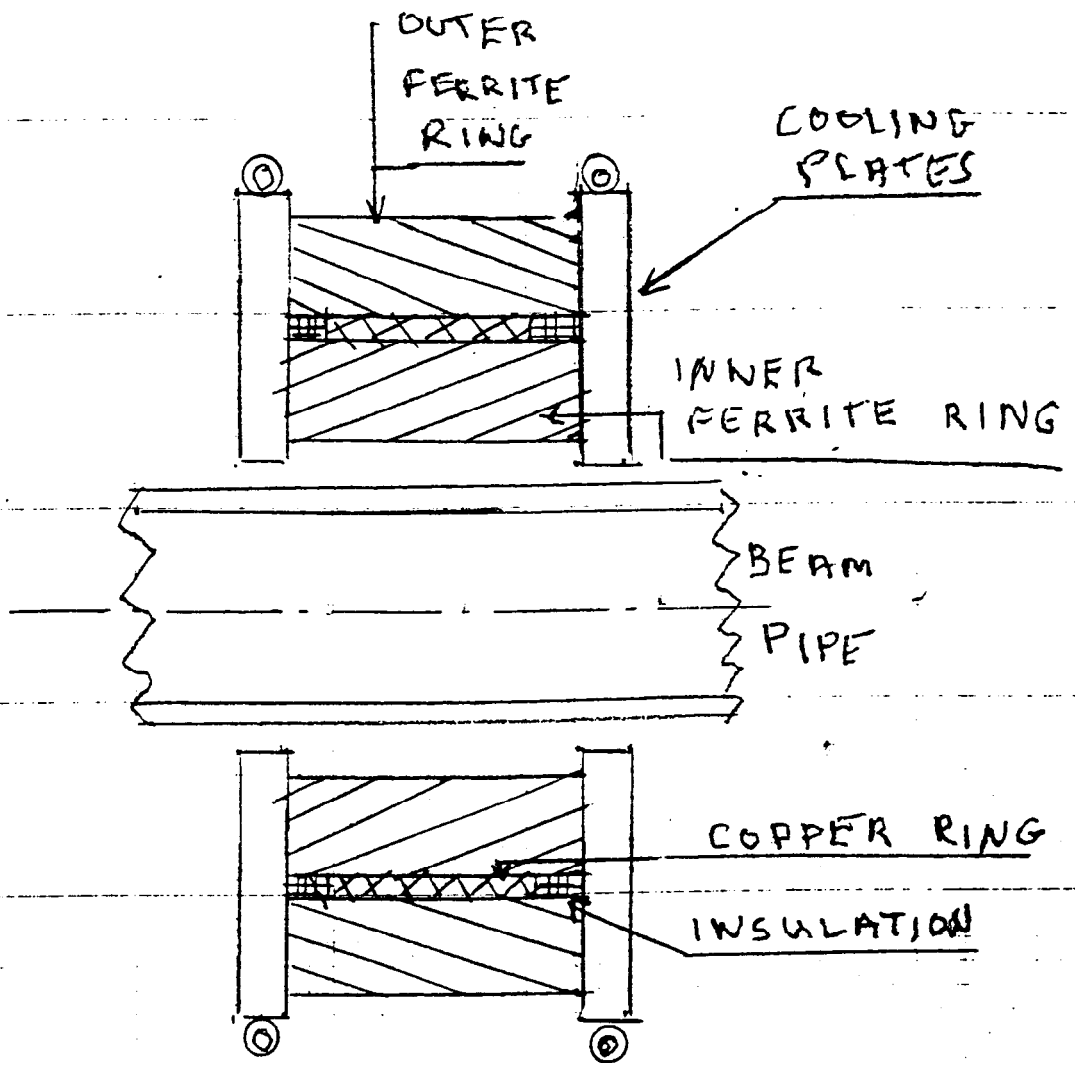

FIGURE 6

CROSS SECTION OF TYPICAL ASSEMBLY OF CONCENTRIC FERRITE RINGS AND THIN SHELL COPPER RING

OGILVIE PRESS INC. BROOKLYN 17 N Y
STOCK NO 450

7811