Accelerator Department
BROOKHAVEN NATIONAL LABORATORY
Associated Universities, Inc.
Upton, L.I., N.Y.

AGS DIVISION TECHNICAL NOTE

No. 43

S. Senator
January 8, 1968

EPOXY BONDING TESTS FOR THE HIGH GRADIENT ACCELERATOR COLUMN

General Considerations

The short column consists of a stack of 15 ceramics each 2.5-in. thick, with an outside diameter of about 28 inches and an inside diameter of 24 inches. They are separated by metal disks. The column has 750 kV across it and this is divided to 50 kV across each ceramic. In operation the inside of the column is at vacuum, the outside at normal atmosphere, and the assembly is hung (cantilevered) from one end horizontally. Additional requirements are an operating temperature of about 100°F, a non-operating temperature of 70°F and a storage temperature of 40°F (min). No external structure can be used to hold the column together.

The ceramic material chosen was a 90-96% alumina with a tensile strength of 25,000-27,000 psi.

The first column made consisted of aluminum disks bonded to the ceramic with an epoxy (Emerson and Cummings W-19). It was cured at room temperature. This resin is very fluid and it was applied by setting the parts together and flowing the epoxy into the joint which was set at a gap of .005-in. This column was used in a vertical position supported at the bottom. There have been a number of failures of the bond that range from vacuum leaks to catastrophic type failures. These have been attributed to the difference in thermal expansion coefficients of the ceramic insulator and the metal disk. All of the failures have occurred at the top joint. The column is vertical and there was a definite thermal gradient in the building during the heating season. This has since been corrected.

If we look at a typical joint

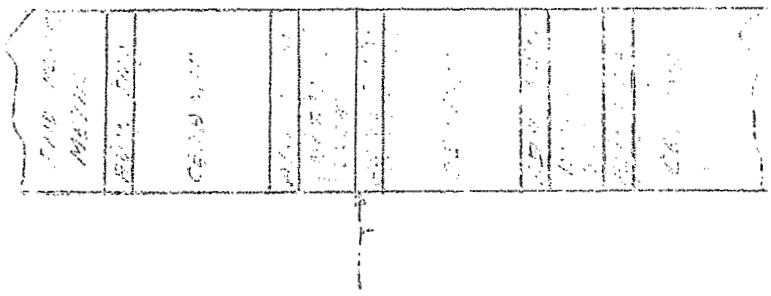

and take a small section across this joint

we see that a shearing stress will be set up in the film due to the differential expansion of the two rings.

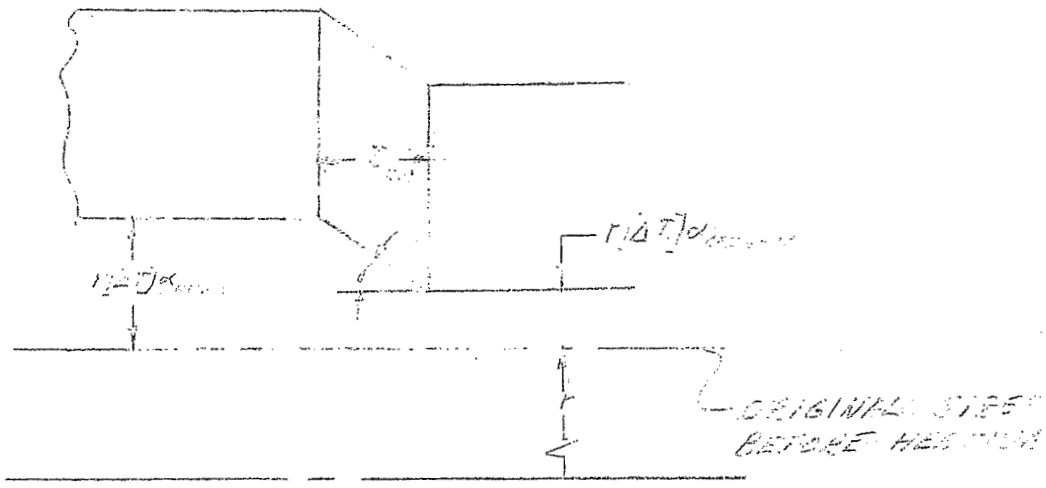

This is a great simplification and it assumes that the stress in the film does not cause any strain on either the ceramic or metal. Since the Modulus of Elasticity and the thickness of both the ceramic and metal are much larger then in the epoxy, this is probably a good approximation for a single joint, say at the end plate. For a thin metal ring between two ceramics there will be twice as much force from the two films on the thinner metal ring. This will cause a larger strain in the metal and a somewhat lower strain in the adhesive film. Hence an adhesive failure will probably occur at an end plate.

From elementary stress analysis (1) we have for the shear stress,

$$S_{shear} = G\gamma \qquad 1)$$

in which G is the shear modulus, and γ is the strain.

From the sketch above we see that

$$\gamma = \frac{r\,\Delta T}{t}(\alpha_{met} - \alpha_{cer}) \qquad 2)$$

Assuming the material obeys Hooks law

$$G = \frac{E}{2(1+\mu)} \qquad 3)$$

and combining 1, 2 and 3 we get

$$S_s = \frac{E}{2(1+\mu)} \cdot \frac{r\Delta T}{t} \quad (\alpha_{met} - \alpha_{cer}) \qquad 4)$$

where S_s = shear stress (psi)

E = modulus of elasticity (psi)

μ = Poisson ratio

r = radius (inch)

T = temperature (^oF)

t = film thickness (inch)

α = coefficient of thermal expansion (inch/inch/^oF)

The manufacturer's lterature on W-19 does not list any value of E or μ for this product. For most materials μ is between 1/4 and 1/3. For epoxies E is in the range from 10^4 through 10^5, t for this joint was .005-in. Using the most favorable of these numbers (to give lowest stress), we obtain,

$$S_s = \frac{10^4}{2(1+1/3)} \cdot \frac{14\ \Delta T}{5\text{x}10^{-3}} \quad (13-3.4)10^{-6}$$

$$S_s = 10.2 \text{ x } 10\ (\Delta T)\ \frac{\text{psi}}{^oF}$$

and for a 30^oF rise in temperature,

$$S_s = 102\ (30) = 3060 \text{ psi}$$

Values of pure shear are not often reported for epoxies, but if we take the pure shear equal to one half of the pure tension stress (Hooks Law) it is a high stress for an epoxy used as an adhesive.

From Eq. 4 it is seen that the stress can be reduced by changes in the epoxy (reduce E), the joint (increase t), or by changing the metal used in the separator (reduce α_{met}). The thermal expansion coefficients and Modulus of Elasticity of some materials are shown below for the temperature range of interest.

Material	Thermal Expansion Coeffs.	Modulus of Elasticity (E)
Aluminum 6061-T6	$13 \times 10^{-6}/^{o}F$ ($68^{o}F$ to $212^{o}F$	10×10^{6} psi
Titanium-commercially pure	$4.8 \times 10^{-6}/^{o}F$ (32 to $212^{o}F$)	14.9×10^{6} psi
" -7 Al - 4 Mo	$5.0 \times 10^{-6}/^{o}F$ (32 to $212^{o}F$)	16.2×10^{6} psi
" -6 Al - 4 V	$6.1 \times 10^{-6}/^{o}F$ (32 to $1200^{o}F$)	16.5×10^{6} psi
Stainless St'l -316	$8.9 \times 10^{-6}/^{o}F$ ($32^{o}F$ to $212^{o}F$)	28×10^{6} psi
" " -304	$9.6 \times 10^{-6}/^{o}F$ ($32^{o}F$ to $212^{o}F$)	28×10^{6} psi
Kovar	$3.06 \times 10^{-6}/^{o}F$ ($86^{o}F$ to $392^{o}F$)	$\approx 30 \times 10^{6}$ psi
Alumina	$1.9 \times 10^{-6}/^{o}F < 72^{o}F$ $3.4 \times 10^{-6}/^{o}F > 72^{o}F$	40×10^{6} psi

For the second column a number of changes were made in the joint design. Due to a possible outgassing of epoxy, the epoxy area exposed to the vacuum was reduced with a compressed indium seal. The material of the separators remained aluminum but its thickness was increased improving the flatness of the material. The base and top plate material were changed to Kovar. It is planned that the third column will have titanium spacer rings. The joint or film thickness was increased to a nominal .008-.010-in.; increasing this much more would tend to increase any strain or creep during normal operation. The only item left to be improved was the epoxy.

A stress analysis of the column, based on the static loads (3) showed that the most severe stress was the joint between the base plate and the first ceramic at the top of the ring. The maximum combined stresses are:

Tension	120 psi
Shear	76 psi

These are not high stresses for epoxies. A number of epoxy formulations were recommended by various sources for this application. One other type of cement, vinyl acetate used on the present low gradient column was recommended, however, the temperature required to set it would melt the indium seal used on this column. Of the epoxies evaluated in this note, little information is available on the actual type of resin, hardness, filler or flexibilizers in the mixture due to the proprietary nature of the blends.

Epoxy Tests

The following adhesives were evaluated.

Adhesive	Mix. Ratio (by weight)	Uncured	Cured	Remarks
Emerson & Cumming W19 Catalyst 11	100 30	Low Viscosity (1500 centipoise)		Used on first column
Ciba AW-106 Catalyst HV095-3V	100 80	High Viscosity Paste	Flex.Bond	Used by CERN on their column
Conap #1242 Catalyst 053	100 100	Paste "	Flex.Bond	
Grodan #1 Vary Flex. resin Type HV	100	Thixatropic Index 300	Flex.Bond	Uses a polymide hardener that in excess amounts acts as a flexibilizer (4)
#1 Hardener Type HV	100	Thixatropic Index 150		
Vinyl Seal	-	Modified vinyl acetate resin in toluene	Flex. film	As used on low gradient column

Three types of tests were run on the adhesives: structural stress, thermal stress and solvent tests.

a) Structural Stress

Tension Tests

For an initial screening samples were made of the various adhesives joining the ceramic to aluminum, titanium or Kovar. The results of these tests are shown in Table I. Large variations in the strength and modes of failure were noted for the same adhesive. This led to a study of cleaning procedures. When a satisfactory procedure was established these variations were reduced. The procedure adapted includes mechanical roughening, cleaning in solvent and detergent, etching of the metal and a final, thorough rinse using tap water, distilled water and alcohol.

Tension-Shear Tests

All of the adhesives appeared satisfactory from a pure tension point of view. However, the actual joint would be subjected to a combined tension-shear stress. Accordingly, a fixture was made that allowed a small sample joint to simulate the worst case of the complete column. The fixture is shown in Fig. 1. By applying a load P a shear force and a tension force were introduced in the joint. An attempt was made to measure the strain. This was only partially succesful. This was due to difficulty in mounting the indicators so they only read epoxy strain. The values of modulus E and G should be treated with caution. Again the results, in Table II, show that all of the resins tested were satisfactory.

Creep Tests

A limited set of creep tests were run on one resin, the Grodan epoxy in tension. In one test a joint was subjected to a cycle of 1000 psi for 8 hours followed by no load for 16 hours. The time restriction was set by the test machine requirements. There was some creep extension under load but the time was too short to establish anything definite. During the rest period the sample fully recovered. In the other test a joint was subjected to a 200 psi tension load for about 2 months. There appeared to be some creep initially, about .0003" to .0005", but this soon stopped, and for over 60 days there was no additional creep.

b. Thermal Stress

All of the adhesives appeared strong enough to support the columns structural loads. A more severe test would be the thermal stress as mentioned previously. Due to the difficulty and expense of making many large ceramic-metal rings and joining them with the various epoxies a simulated joint was made to first screen the adhesives. Looking at equation 4 we see that by increasing the radius, r, and decreasing the differential expansion, $\Delta\alpha$, we can maintain all of the other factors constant.

Rewriting Eq. 4

$$r\,(\alpha_1-\alpha_2) = S_s\left(\frac{2\,(1+\mu)}{E}\right)\frac{t}{\Delta T} = \text{constant}$$

$$r_a(\alpha_1-\alpha_2) = C = r_b(\alpha_3-\alpha_4)$$

$$r_a = r_b\,\frac{(\alpha_3-\alpha_4)}{\alpha_1-\alpha_2} \qquad 5)$$

The initial tests were made by cementing the ends of 44" long aluminum and steel bars together with the various adhesives and thermally cycling them in an oven between room temperature and 53°C. The W19 failed after two cycles, the Conap after 3 cycles. Two of the epoxies were satisfactory. These are the Grodan Vary Flex Resin, Type HV and the CIBA AW106. The CIBA joint broke after 12 cycles. The Grodan was still good after 22 cycles. Based on these tests a ceramic ring was epoxied to an aluminum plate with the Grodan resin and a gap (t) of .005". This was successfully cycled from 20°C, the temperature it was made at, to 35°C a number of times, see Fig. 2. However, when it was cycled below 15°C the joint failed. Failure occurred near a shim used to establish the gap. No shims are used on the actual column. A failure was determined by leak checking the joint. This does not meet the 40°F requirement. However, with no shims and an increased gap we should be able to take temperatures somewhat lower than 15°C. Finally the joint was heated to 200°F where mechanical separation occurred. This resin apparently gets softer as it warms up and this accounts for the difference in flexibility. The Grodan type resin was chosen for use in the second column.

Figure 3 is a plot of the degassing rate of the Grodan resin under vacuum. The values are good for a room temperature cured epoxy but not good when compared to Teflon or Viton. Samples of the cured resin were soaked in alcohol, acetone and the aluminum etchent, overnight with no visible deterioration. When placed in a commercial stripper the material dissolved. However, soaking a sample joint in stripper for even a few days only cleaned the edges up and started to slowly work its way into the joint with no obvious joint failure.

Based on the results of these tests a short 3-section column was built and tested by R. Amari. This column performed satisfactorily (3).

Vinyl-Acetate Joint

The low gradient column used is the present injector to AGS and other columns in various Van de Graaff accelerators at BNL are made with a vinyl acetate cement. This cement is applied to the ceramic and metal spaces, allowed to dry, assembled in fixtures and then pressure and heat are applied to make the joint. The pressure and temperature are used to establish the gap or film thickness with excess adhesive forming a bead. As a comparison a single sample joint using the vinyl acetate adhesive joining aluminum blocks to a ceramic was made. The pressure was 200 psi and the temperature was 350°F. The joint thickness was a total of .006" for two joints. The tension load shown in Table 1 (item 19) was 3320 psi. This is a higher value then found on any epoxy sample.

The size of the columns made by the technique at BNL are about 9" O.D. The separator material used is stainless steel. In addition a column of 15.5" diameter was built using a vinyl acetate adhesive between a ceramic and stainless steel separator (5). It might be possible, based on these previous results, to use a vinyl acetate adhesive with a lower thermal expansion separator in our larger joint. One material that has good high voltage properties, no corrosion problem in our environmental conditions, and a low thermal expansion coefficient is commercially pure titanium.

Rewriting Eq. 5

$$r_{tit} = r_{ss}\left(\frac{\alpha_{ss}-\alpha_{cer}}{\alpha_{tit}-\alpha_{cer}}\right)$$

If we assume the worst case where the column is rapidly heated so that the separators change temperature but the ceramics do not.

$$r_{tit} = r_{ss} \quad \frac{\alpha_{ss}}{\alpha_{tit}}$$

and substituting values

$$r_{tit} = \frac{15.5}{2}\left[\frac{8.9}{4.8}\right] = 14.38 \text{ inches}$$

Since the present column has an outside diameter of about 28 inches this adhesive technique at least appears feasible. It offers advantages in that it can take the radiation and vacuum (without the indium seal) and the ceramics can be salvaged simply. However, an investment in retesting, ovens, presses and fixtures would have to be made, and the epoxied ceramic can also be salvaged.

References

1. E.P. Popov, Mechanics of Materials, Prentice Hall, 1952, Chap. 2.
2. Design News, May 27, 1964, Thermosets Supplement, pages S-8.
3. R. Amari, private communication.
4. Skeist, Handbook of Adhesives, Reinhold, 1962. Pages 329, 430-433.
5. P. Bernard, Vinyl Acetate Metal-Ceramic Bonding Procedure, Saturne Operation and Maintenance Dept. 21, Sept. 1966, SEFS TD 66/56.

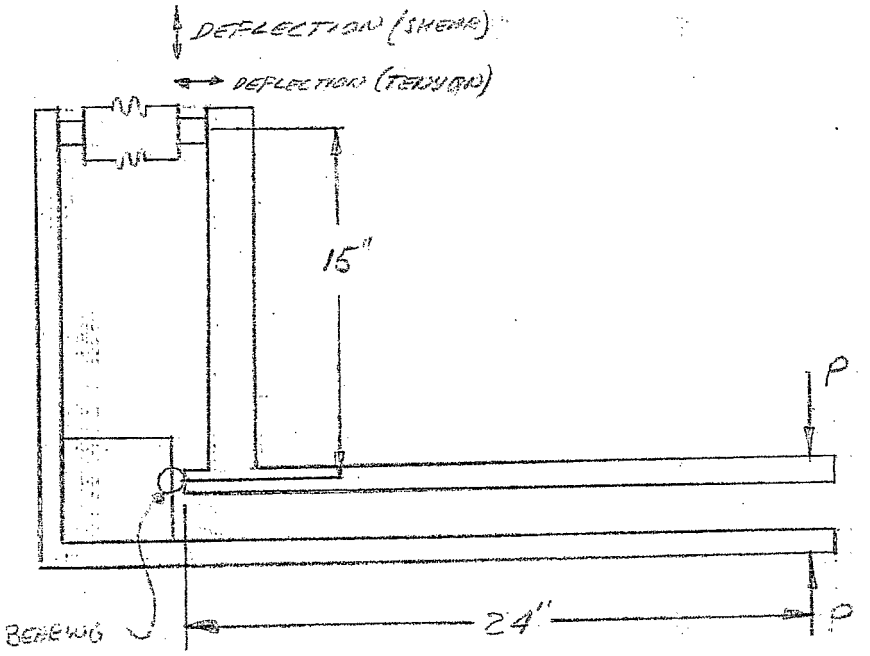

$$S_s = \frac{P}{A}$$

$$S_t = S_s \frac{24}{15}$$

FIGURE 1

BROOKHAVEN NATIONAL LABORATORY

BY_____ DATE_____ SUBJECT TABLE 1 SHEET NO._____ OF_____

CHKD. BY_____ DATE_____ RESULTS OF TENSION TESTS JOB NO._____

DEPT. OR PROJECT_____

ITEM NO.	TEST NO.	MATERIAL: METAL	MATERIAL: [illegible]	CLEANING: [illegible]	CLEANING: [illegible]	STRESS: PSI TENSION	REMARKS
1	1	ALUM	W 19 (100/30)	1a, 2a, c, 4a, 5, 4d	1a, 2a, c, 4a, 5, 4d	1305	[illegible]
2	2	ALUM	W 19 (100/30)	1a, 3a, 2a, c, 4a, 5, 4d		1323	[illegible]
3	3	ALUM	CIBA AD-106	1a, 2a, c, 4a, 5, 4d		978	[illegible]
4	4	ALUM	CONAP #1242			1297	[illegible]
5	5	ALUM	GRODAN			915	[illegible]
6	6	[illegible]	GRODAN	1a, 2b, c, 4a, 3a, 4a, b, c	1a, 2b, c, 4a, 3b, 4a, b, c	2290	[illegible]
7	7	ALUM	CONAP #1242			2275	[illegible]
8	24	[illegible]	[illegible]	1a, [illegible], c, 4a, 3a, [illegible]	1a, 2b, c, 4a, b, c	2200	[illegible]
9	[illegible]	[illegible]	[illegible]	1a, 2b, c, 4a, b, c	1a, [illegible]	2450	[illegible]
10	23	[illegible]	[illegible]	1a, 2b, c, 4a, 3a, 4a, b, c	1a, 2b, c, 4a, [illegible]	1[illegible]	[illegible]
11	14	[illegible]	CIBA [illegible]	1b, 2b, c, 4a, 3c, 4a, b, c	1a, [illegible]	[illegible]	[illegible]
12	30	KOVAR	GRODAN	1b, [illegible], 4a, b, c	[illegible]	1[illegible]	[illegible]
13	31	[illegible]	[illegible]	1a, [illegible], 4a, 3d, 4a, b, c	1a, 2b, c, 4a, b, c	[illegible]	[illegible]
14	32	ALUM	[illegible]	1a, 2b, c, 4a, [illegible], 4a, [illegible]	1a, 2b, c, 4a, b, c	23[illegible]	[illegible]
15	33	ALUM	[illegible]			[illegible]	[illegible]
16	34	ALUM	[illegible]			2[illegible]	[illegible]
17	35	KOVAR	GRODAN (5 [illegible])	1b, 2b, c, 4a, 3c, 4a, b, c	1a, 2b, c, 4a, b, c	25[illegible]	[illegible]
18	36	KOVAR	GRODAN (50/50)	1b, 2b, c, 4a, b, c	1a, 2b, c, 4a, b, c	3110	BOND FAILURE [illegible]
19	37	ALUM	[illegible]	2b, c, 4a, b, c, d	2b, c, 4a, b, c, d	3320	CEMENT FAILURE

CLEANING PROCEDURE

1 ROUGHEN SURFACE
   a. SANDBLAST
   b. ABRASIVE PAPER
2 DEGREASE
   a. [illegible]
   b. [illegible]
   c. CORUB WITH ALCOHOL & HOT WATER
3. ETCH
   3 b. CERAMIC 90 PARTS HF
   300 PARTS HNO_3
   300 PARTS WATER
   BRUSH ON FOR [illegible]
   c. KOVAR 5% [illegible]
   FOR [illegible]
   d. TITANIUM [illegible]
   1.2 PARTS SODIUM FLORIDE
   2.7 PARTS HF
   91 PARTS WATER
   BRUSH ON FOR [illegible]
4 [illegible]
   TAP WATER
   [illegible]
   ALCOHOL

BROOKHAVEN NATIONAL LABORATORY

BY_____ DATE_____ SUBJECT METAL-EPOXY-CERAMIC SHEAR-TENSION TESTS SHEET NO._____ OF_____

CHKD. BY_____ DATE_____ JOB NO._____

DEPT. OR PROJECT_____ Pg. 10

TESTS [illegible]

SAMPLE	EPOXY / METAL	LOAD P	STRESS S_{SHEAR}	STRESS $S_{TENSION}$	DEFLECTION SHEAR (IN)	DEFLECTION TENSION (IN)	G	E	RESOLVED STRESS S_T (PSI)	REMARKS
8	CIBA	0	0	0	-	-				
	ALUM	250	83.4	133.4	.0038	.0002				JOINT MADE [illegible]
	CERAMIC	500	166.8	266.8	.0095	.0011				SOME BOLT STRETCH
	ALUM SANDBLASTED	750	250.2	410.2	.019	.0013				
	ETCHED & [illegible]	900	300	480	.0244	.0021				FAILED AT SPACE JOINT
	A	900	400	667					853	2 1/4 in²
13	CIBA	0	0							AREA - 3,[illegible], 16 = 8.84 in²
	TITANIUM	250	88	142	.0025	.0002	8400	3820		2 - 5/8" [illegible]
	CERAMIC SAND	500	176	284	.0150	.0004				JOINTS [illegible]
	& ETCHED	750	264	426	-	.0013				
	TIT, [illegible]	750	339	542					793	FAILED IN AREA
	[illegible]									- 2.375 - .16 = 2.215
9	GRODAN	0	0	0						
	ALUM.	250	83.4	133.4	.003	.001	7750	665		SOME BOLT
	CER & ALUM SANDBLASTED & ETCHED	500	166.8	266.8	.0072	.0026				STRETCH IN
		750	250.2	410.2	.0135	.005				TENSION AT
		900	300.	480	.0175	.0066				LEAST .0035
		750	250.2	410.2	.016	.0062				INDICATES
		500	166.8	266.8	.0117	(STUCK)				SOME HYSTERIES, MAY RETURN WITH TIME
		250	83.4	133.4	.0077	.003				
			0	0	.002	.0008				
		1950	650	1040					1353	
10	CONAP	0	0	0	0					
	ALUM	250	83.4	133.4	.0025	-				
		500	166.8	266.8	.009	.0001	9550	13,350		
		750	250.2	410.2	.0215	.0004				
		900	300.	480	.033	.0013				
		750	250.2	410.2	.028	SLIPPED				DIAL INDICATOR APPEARE TO HAVE SLIPPED
		500	166.8	266.8	.0205	-				
		250	83.4	133.4	.015	-				
		0	0	0						
		1050	-	-		-				FIXTURE FAILED
		1950	650	1040					1353	REPAIRED TO [illegible]

K+E 7 X 10 INCHES MADE IN U.S.A.
KEUFFEL & ESSER CO.

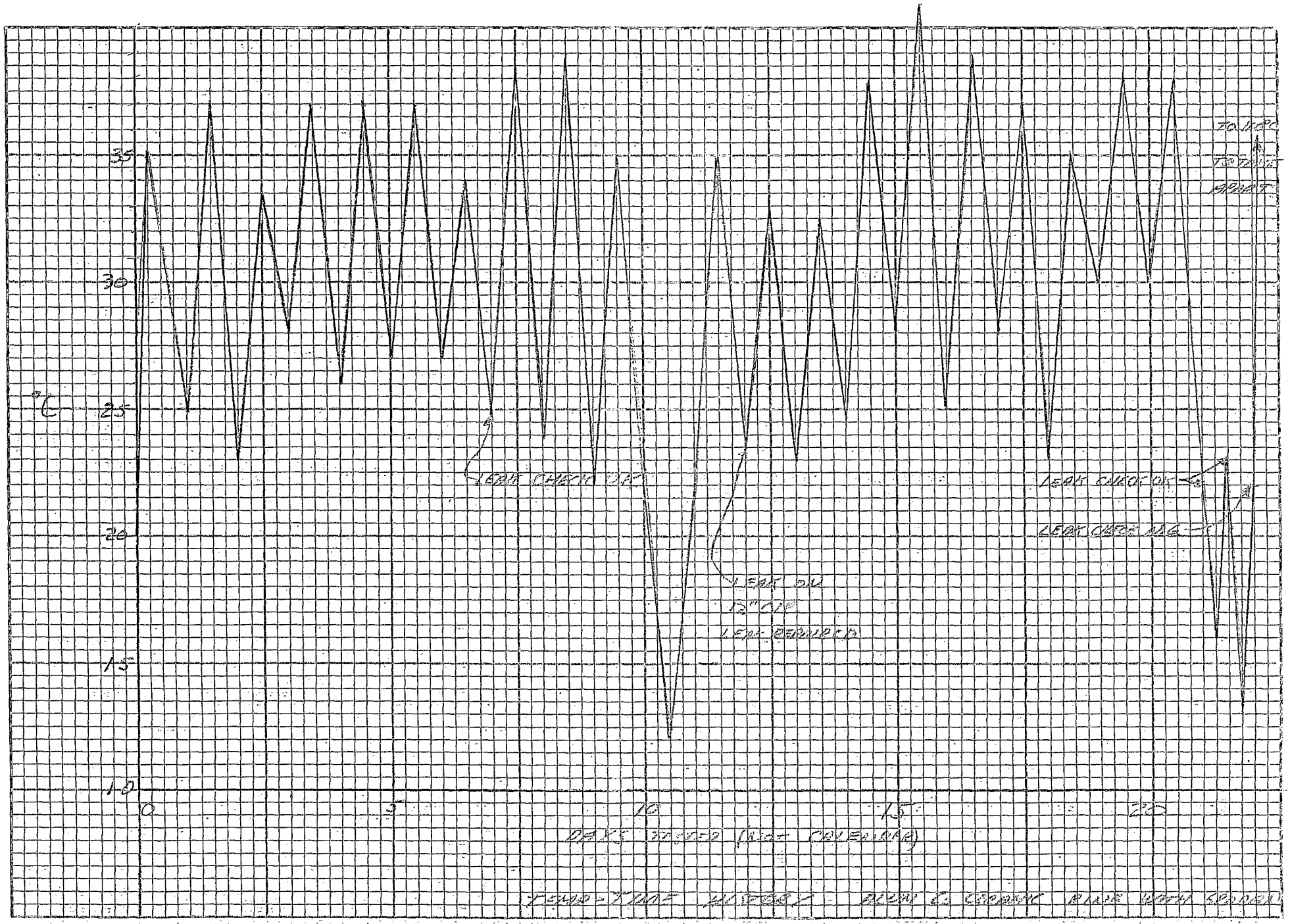

FIGURE 2

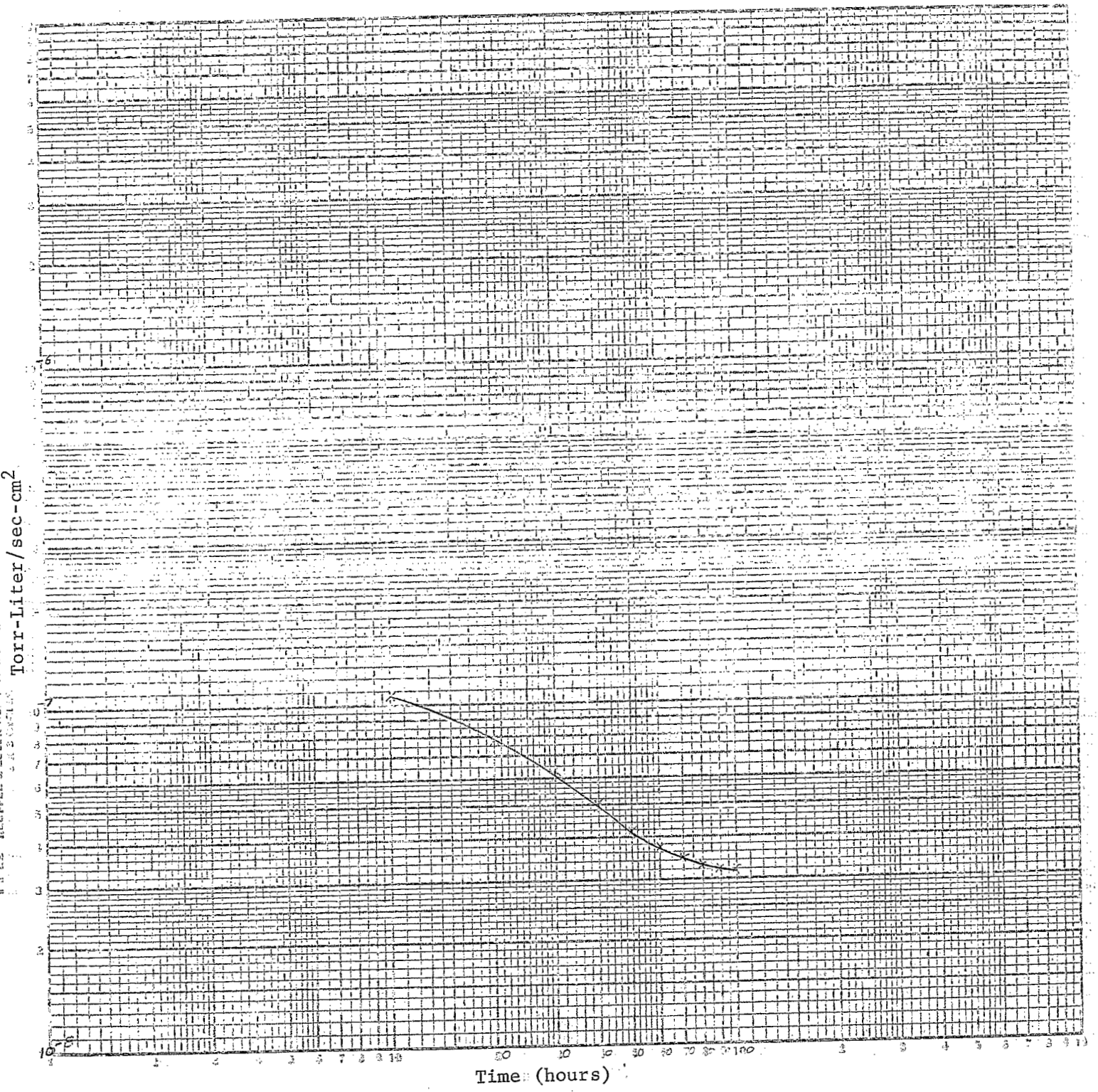

Outgassing Rate of Grodan Epoxy (Area 74 cm^2)

Figure 3

Distribution:

R. Abbott
R. Amari
K. Batchelor
C. Bellezzi
P. Clarke
R. Clipperton
V. Kovarik
R. Lane
R. Locky
I. Polk
J. Richter
S. Senator
A. van Steenbergen
G. Wheeler
T. Sluyters
also: All Mechanical Engineers in AGS Division, Advanced Accelerator Division, Converion (Ring), (Linac) Experimental Division (Floor Oper.) and (Cryogenics.)