RHIC Accelerator Controls Section
Bldg. 1004A Wiring Diagrams
BNL Drawing Number 94028745

Brookhaven National Laboratory, Upton, New York 11973
Created By: Ed Koropsak

Last Updated 12/31/01

NOTE: V115's used in the RF system require special firmware, these boards are different then the ones used in the rest of the RHIC control system!!!!!!

Power Distribution
- 🕮 Rack CR1 (Sheet 1)
- 🕮 Rack CR2, Rack R04B04 (Sheet 2)
- 🕮 Rack R04ACT9, Rack R04ACT18 (Sheet 3)
- 🕮 Rack R04ACT5, Rack R04ACT22 (Sheet 4)

SPARE
- 🕮 F/O Channels (Sheet 5)

Serial Links
- 🕮 RHIC Event Link (Sheet 6,7,8)
- 🕮 Real Time Data Link (RTDL) (Sheet 9,10,11)
- 🕮 Reset Link (Sheet 12)
- 🕮 Delayed Beam Sync Yellow Link (Sheet 13)
- 🕮 Delayed Beam Sync Blue Link (Sheet 14)
- 🕮 Beam Sync Yellow Link (Sheet 23)
- 🕮 Beam Sync Blue Link (Sheet 24)

VME Chassis CFE-4A-RFTIME modules
- 🕮 Front End Computer, V108 Utility Module (Sheet 15)
- 🕮 V102 Delay Modules (Sheet 25,25A,26,26A)
- 🕮 V111 Beam Sync Link Monitors (Sheet x)
- 🕮 V194 Pulse Fanout Modules (Sheet 36A,36B)
- 🕮 V124 Yellow/Blue Modules (Sheet 42, 43)

VME Chassis CFE-4A-BSYNC modules
- 🕮 Front End Computer, V108 Utility Module (Sheet 16)
- 🕮 V123 Blue Beam Sync Link Encoder Module (Sheet 37)
- 🕮 V201 Blue Beam Sync Link Input Modules (Sheet 34)
- 🕮 V123 Yel Beam Sync Link Encoder Module (Sheet 37)
- 🕮 V201 Yel Beam Sync Link Input Modules (Sheet 35)
- 🕮 V194 Pulse Fanout Modules (Sheet 36,41)
- 🕮 V120 Permit System Module (Sheet 39)
- 🕮 Permit System Interface Panel (Sheet 40)
- 🕮 V102 PLL Control (Sheet 44)
- 🕮 PENTEK1420 PLL 14 Mhz Ref. (Sheet 45)
- 🕮 Switched Reference PLL (Sheet 46)

VME Chassis CFE-4A-RFB1 modules
- 🕮 Front End Computer, V108 Utility Module (Sheet 17)
- 🕮 V113/V114 MADC System (Sheet 22)
- 🕮 V102 Delay Modules (Sheet 27)
- 🕮 V115 WFG A (Sheet x)
- 🕮 V115 WFG B (Sheet x)
- 🕮 V115 WFG C (Sheet x)
- 🕮 V115 WFG D (Sheet x)
- 🕮 V115 WFG E (Sheet x)
- 🕮 V115 WFG F (Sheet x)
- 🕮 V115 WFG G (Sheet x)

VME Chassis CFE-4A-RFB2 modules
- 🕮 Front End Computer, V108 Utility Module (Sheet 18)
- 🕮 V102 Delay Modules (Sheet 28,29,29A)

VME Chassis CFE-4A-RFY1 modules
- 🕮 Front End Computer, V108 Utility Module (Sheet 19)
- 🕮 V113/V114 MADC System (Sheet 21)
- 🕮 V102 Delay Modules (Sheet 30,31)
- 🕮 V115 WFG A (Sheet x)
- 🕮 V115 WFG B (Sheet x)
- 🕮 V115 WFG C (Sheet x)
- 🕮 V115 WFG D (Sheet x)
- 🕮 V115 WFG E (Sheet x)
- 🕮 V115 WFG F (Sheet x)
- 🕮 V115 WFG G (Sheet x)

VME Chassis CFE-4A-RFY2 modules
- 🕮 Front End Computer, V108 Utility Module (Sheet 20)
- 🕮 V102 Delay Modules (Sheet 32,33,33A)

VME Chassis CFE-4A-ACDIPOLE modules
- 🕮 Front End Computer, V108 Utility Module (Sheet 47)
- 🕮 V102 Delay Modules (Sheet 48)

REV.	ZONE	ECN NO.	DATE	BY	CKR	APP.

ACS, BNL 8/24/99 11:45 AM 8745_01.dwg

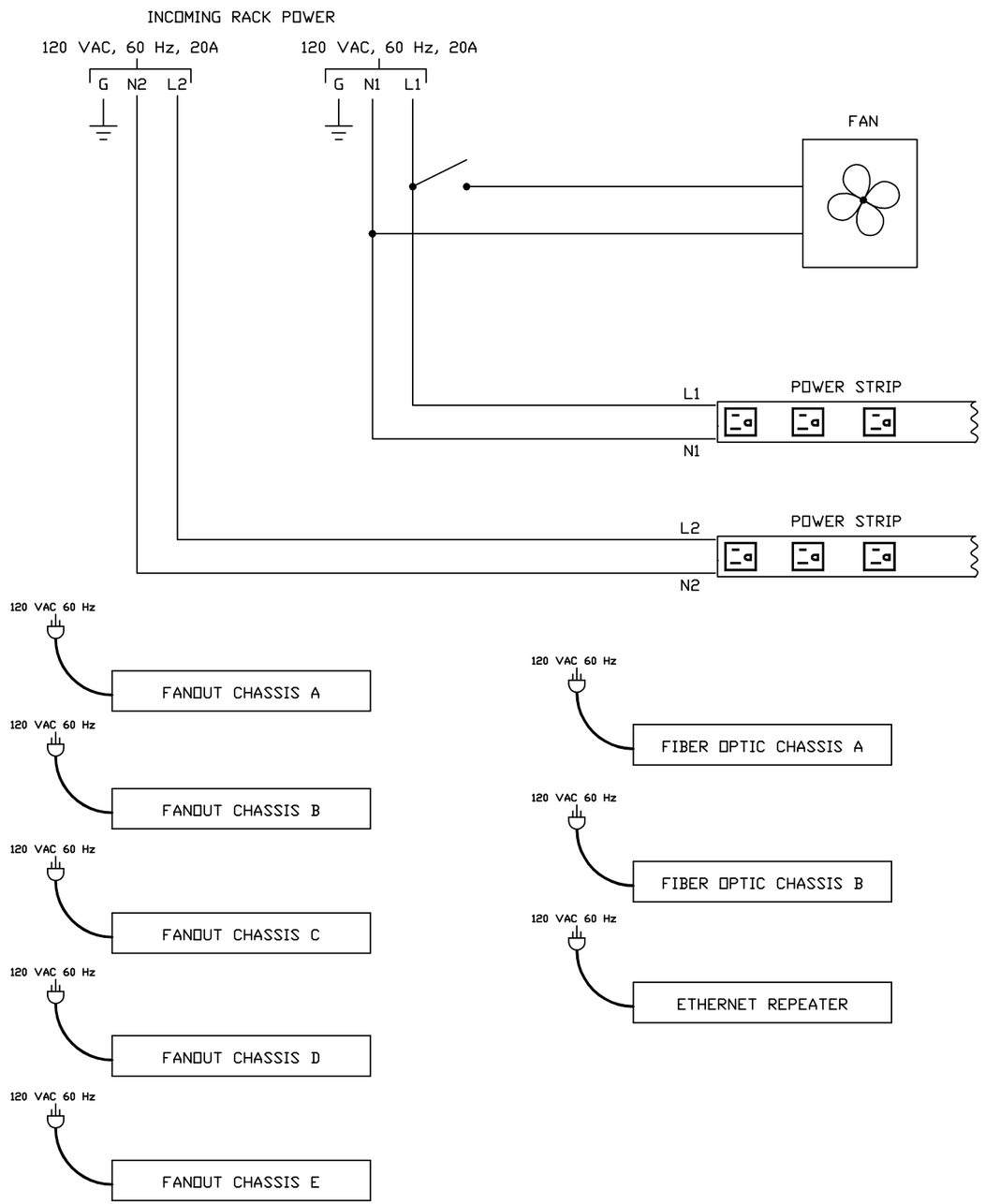

NOTE: ALL 120 VAC, 60 Hz POWER CORDS PLUG INTO POWER STRIP OUTLETS

RACK CR1

-3	-2	-1	REF DESIGNATOR	ITEM NO.	DESCRIPTION	MAT'L DWG NO./INL NO.
		?		11	CABLE ASSY, POWER SUPPLY TO MADC A/D I/O PANEL (3 CABLES/PS)	
		?		10	CABLE ASSY, LOW RES PS IF MODULE TO POWER SUPPLY	
		1		9	PERMIT SYSTEM INTERFACE CABLE, T120 TO PERMIT SYSTEM INTERFACE PANEL	D09-E2225-2
		?		8	SERIAL LINK TWINAX CABLE, LENGTH AS REQUIRED	94028176
		28		7	SERIAL LINK TWINAX CABLE, 1 FT	94028176
		?		6	DUPLEX MULTIMODE FIBER OPTIC CABLE, T115 TO LOW RES PS INTERFACE MODULE	94028249
		?		5	SINGLE MODE FIBER OPTIC CABLE	94028251
		8		4	MADC A/D I/O CABLE	94028216
		14		3	TRANSITION MODULE P2 RIBBON CABLE, V115, V120	94028159
		2		2	MADC V113 TO V114 P2 INTERFACE RIBBON CABLE	94028218
		7		1	NETWORK CABLE TO FEC	

QTY REQD

INTERPRET IN GENERAL ACCORDANCE WITH ASME Y14.24M-1989

UNLESS OTHERWISE SPECIFIED DIMENSIONS ARE IN INCHES

DECIMAL TOLERANCES
.X ±.030
.XX ±.015
.XXX ±.005
ANGULAR TOLERANCE
± .5°

NA FINISH

BREAK SHARP EDGES
MAX. XX MIN. XX

OUTSTANDING ECN

Q.A. CATEGORY A-3		DATE
DRAWN BY	Ed Koropsak	9/4/98
CHECKED BY		
DESIGN APPROVAL		
ENGINEER APPROVAL	R. MICHNOFF	9/4/98
SUPVR. APPROVAL		

NEXT ASSEMBLY

BROOKHAVEN NATIONAL LABORATORY
UPTON, N.Y. 11973

RHIC CONTROLS WIRING DIAGRAM
SERVICE BLDG. 1004A, RACK CR1
POWER DISTRIBUTION

SIZE D | DRAWING NUMBER 94028745 | REV. A

MATERIAL: ——— SCALE: NA WEIGHT: – SHEET 1 OF X

*AUTOCAD

REV.	ZONE	ECN NO.	DATE	BY	CKR	APP.

C-A, BNL 6/29/01 4:03 PM 8745_02.dwg

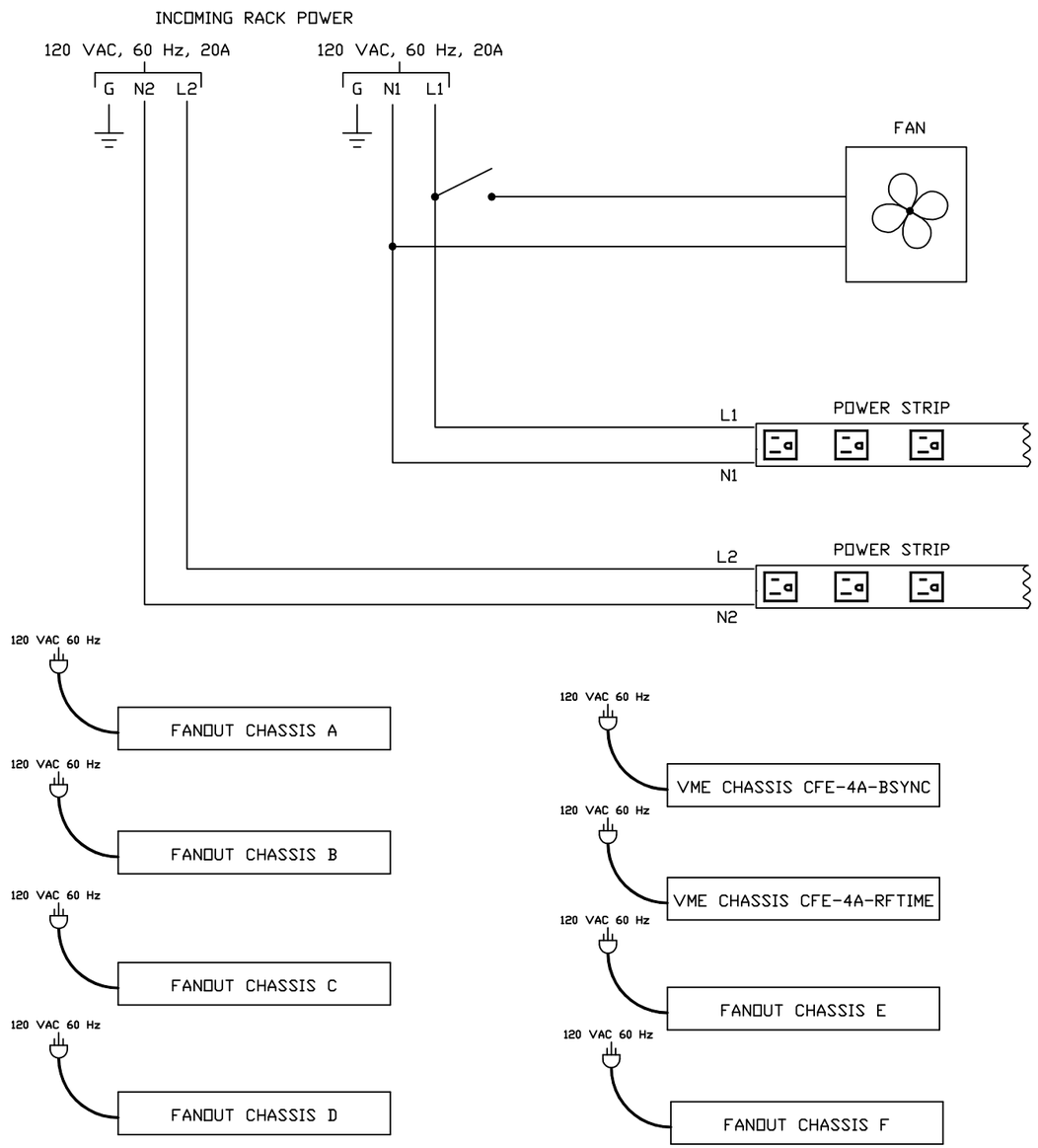

NOTE: ALL 120 VAC, 60 Hz POWER CORDS
PLUG INTO POWER STRIP OUTLETS

RACK CR2

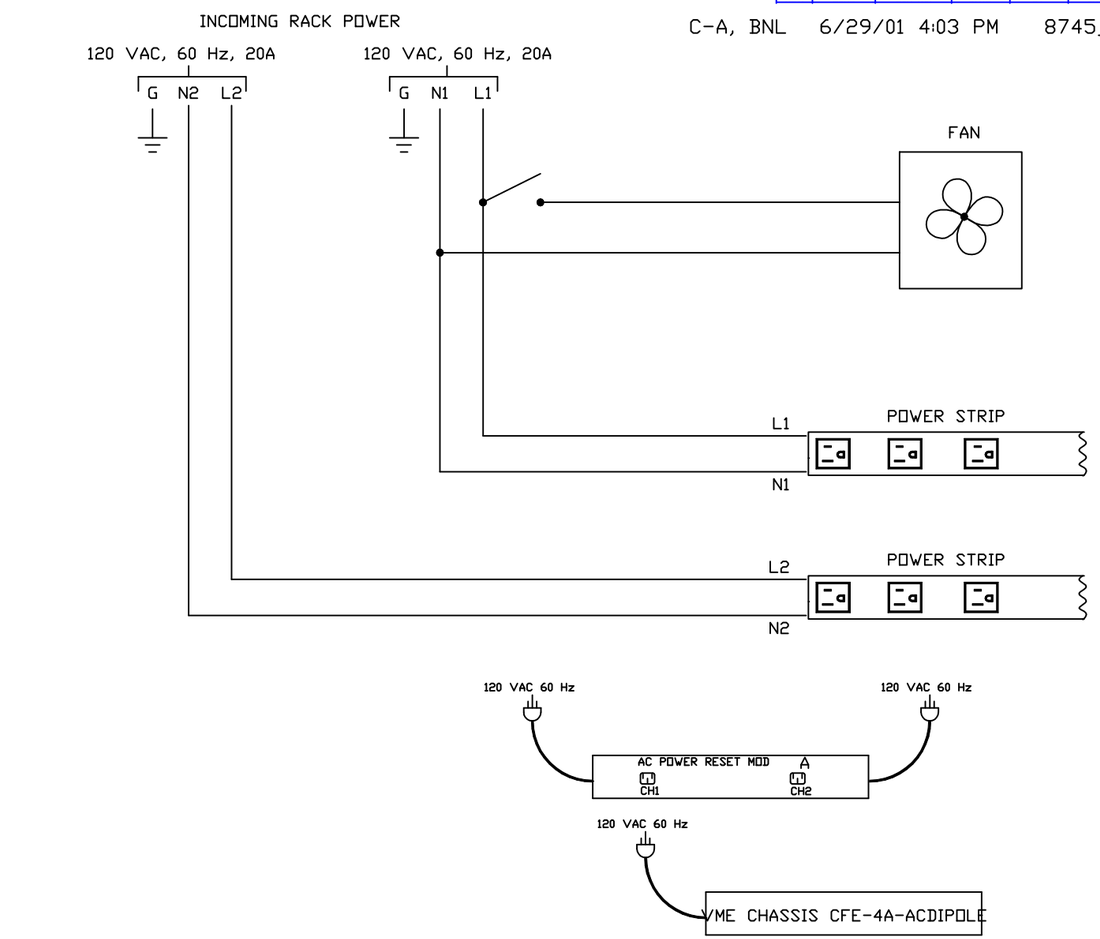

NOTE: ALL 120 VAC, 60 Hz POWER CORDS
PLUG INTO POWER STRIP OUTLETS

RACK RF DIPOLE

-3	-2	-1	REF DESIGNATOR	ITEM NO.	DESCRIPTION	MAT'L. DWG NO.,BNL NO.
QTY REQD						

INTERPRET IN GENERAL ACCORDANCE WITH ASME Y14.24M-1989

UNLESS OTHERWISE SPECIFIED DIMENSIONS ARE IN INCHES

DECIMAL TOLERANCES
.X ±.030
.XX ±.015
.XXX ±.005
ANGULAR TOLERANCE
± .5°

OUTSTANDING ECN

NA FINISH

BREAK SHARP EDGES
MAX. XX MIN. XX

Q.A. CATEGORY	A-3	DATE	
DRAWN BY	Ed Koropsak	9/4/98	
CHECKED BY			
DESIGN APPROVAL			
ENGINEER APPROVAL	R. MICHNOFF	9/4/98	
SUPVR. APPROVAL			

NEXT ASSEMBLY

BROOKHAVEN NATIONAL LABORATORY
UPTON, N.Y. 11973

RHIC CONTROLS WIRING DIAGRAM
SERVICE BLDG. 1004A, RACK CR2
POWER DISTRIBUTION

SIZE D
DRAWING NUMBER 94028745
REV. A

MATERIAL: ——— SCALE: NA WEIGHT: – SHEET 2 OF X

*AUTOCAD

REV.	ZONE	ECN NO.	DATE	BY	CKR	APP.

ACS, BNL 8/24/99 11:49 AM 8745_03.dwg

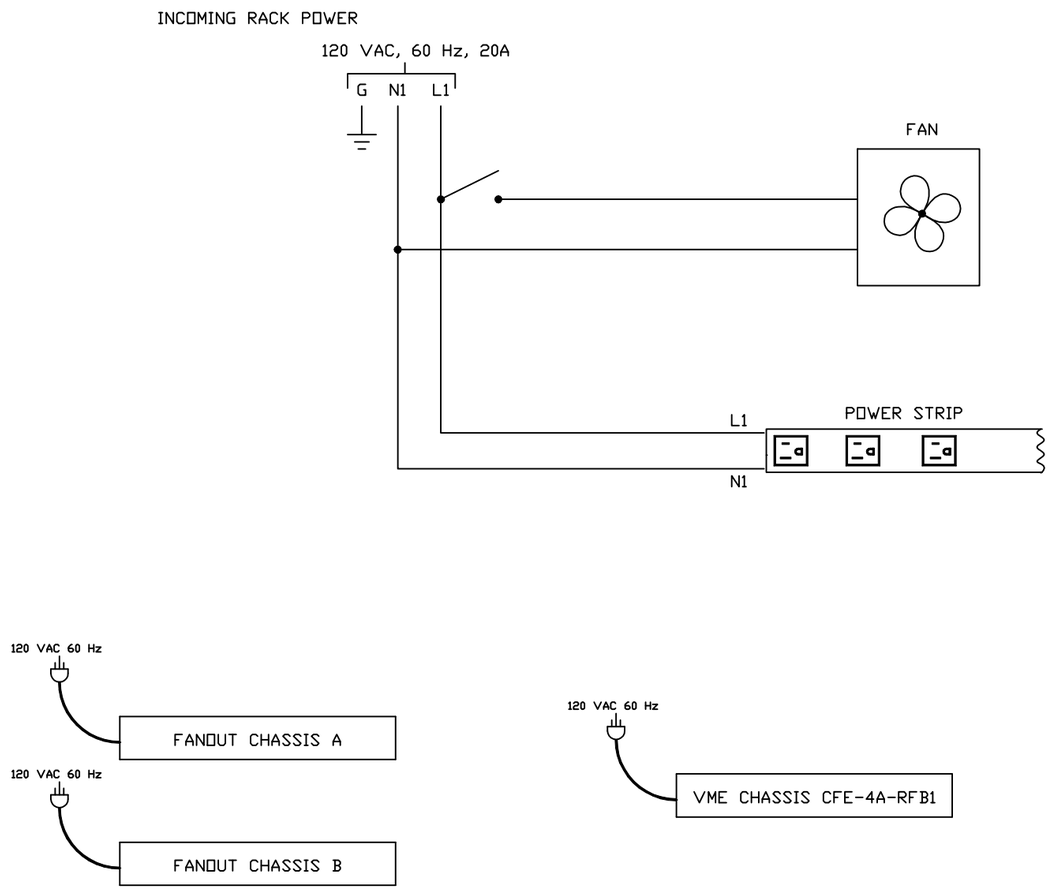

NOTE: ALL 120 VAC, 60 Hz POWER CORDS
PLUG INTO POWER STRIP OUTLETS

RACK R4ACT9

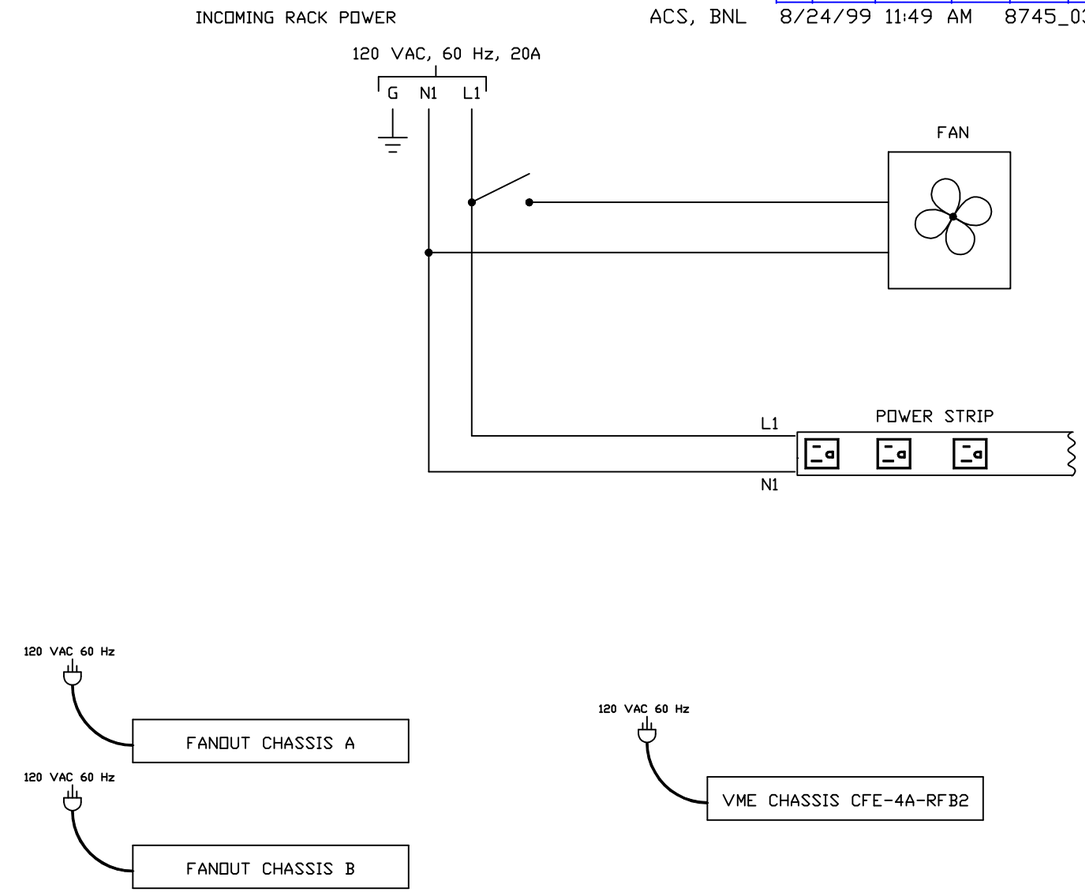

NOTE: ALL 120 VAC, 60 Hz POWER CORDS
PLUG INTO POWER STRIP OUTLETS

RACK R4ACT18

-3	-2	-1	REF DESIGNATOR	ITEM NO.	DESCRIPTION	MAT'L DWG NO./INL NO.
QTY REQD						

INTERPRET IN GENERAL ACCORDANCE WITH ASME Y14.24M-1989

UNLESS OTHERWISE SPECIFIED DIMENSIONS ARE IN INCHES

DECIMAL TOLERANCES
.X ±.030
.XX ±.015
.XXX ±.005
ANGULAR TOLERANCE
± .5°

NA FINISH

BREAK SHARP EDGES
MAX. XX MIN. XX

OUTSTANDING ECN

Q.A. CATEGORY A-3		DATE
DRAWN BY	Ed Koropsak	9/4/98
CHECKED BY		
DESIGN APPROVAL		
ENGINEER APPROVAL	R. MICHNOFF	9/4/98
SUPVR. APPROVAL		

NEXT ASSEMBLY

BROOKHAVEN NATIONAL LABORATORY
UPTON, N.Y. 11973

RHIC CONTROLS WIRING DIAGRAM
SERVICE BLDG. 1004A, RACK R4ACT9, R4ACT18
POWER DISTRIBUTION

SIZE D
DRAWING NUMBER 94028745
REV. A

MATERIAL: ——— SCALE: NA WEIGHT: – SHEET 3 OF X

1 *AUTOCAD

REV.	ZONE	ECN NO.	DATE	BY	CKR	APP.

ACS, BNL 8/24/99 1:03 PM 8745_04.dwg

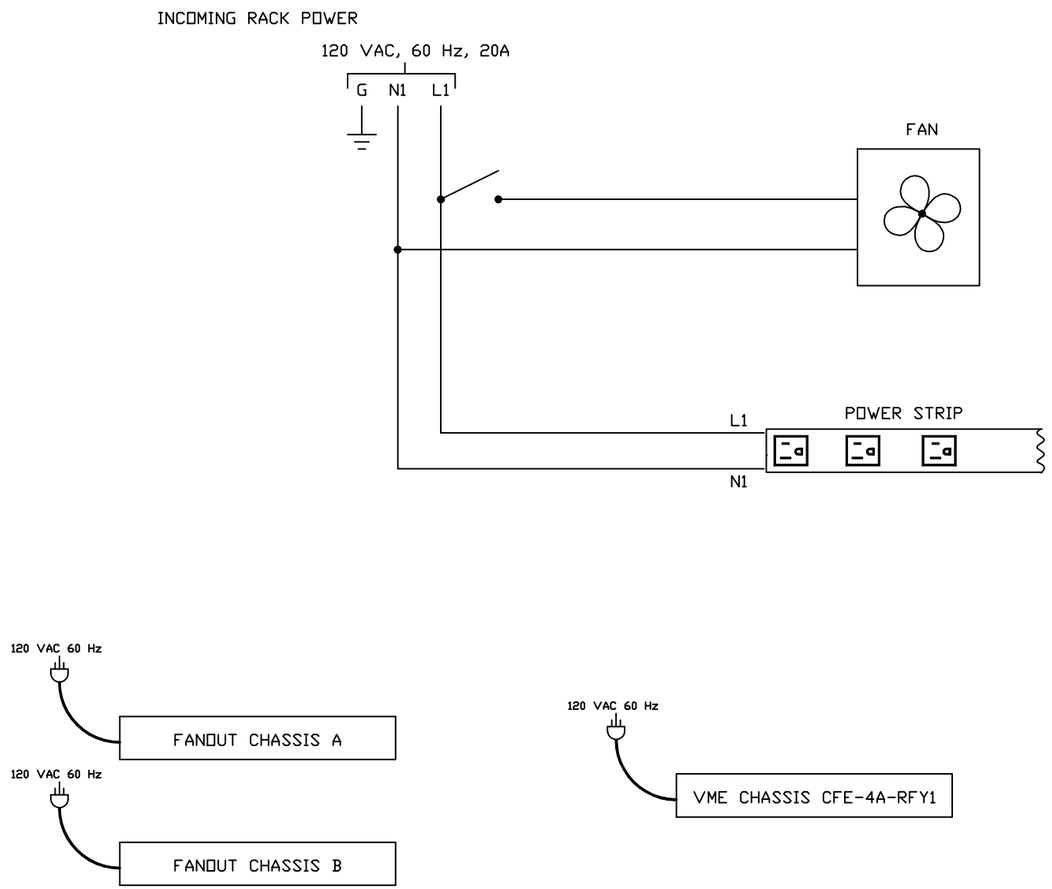

NOTE: ALL 120 VAC, 60 Hz POWER CORDS
PLUG INTO POWER STRIP OUTLETS

RACK R4ACT5

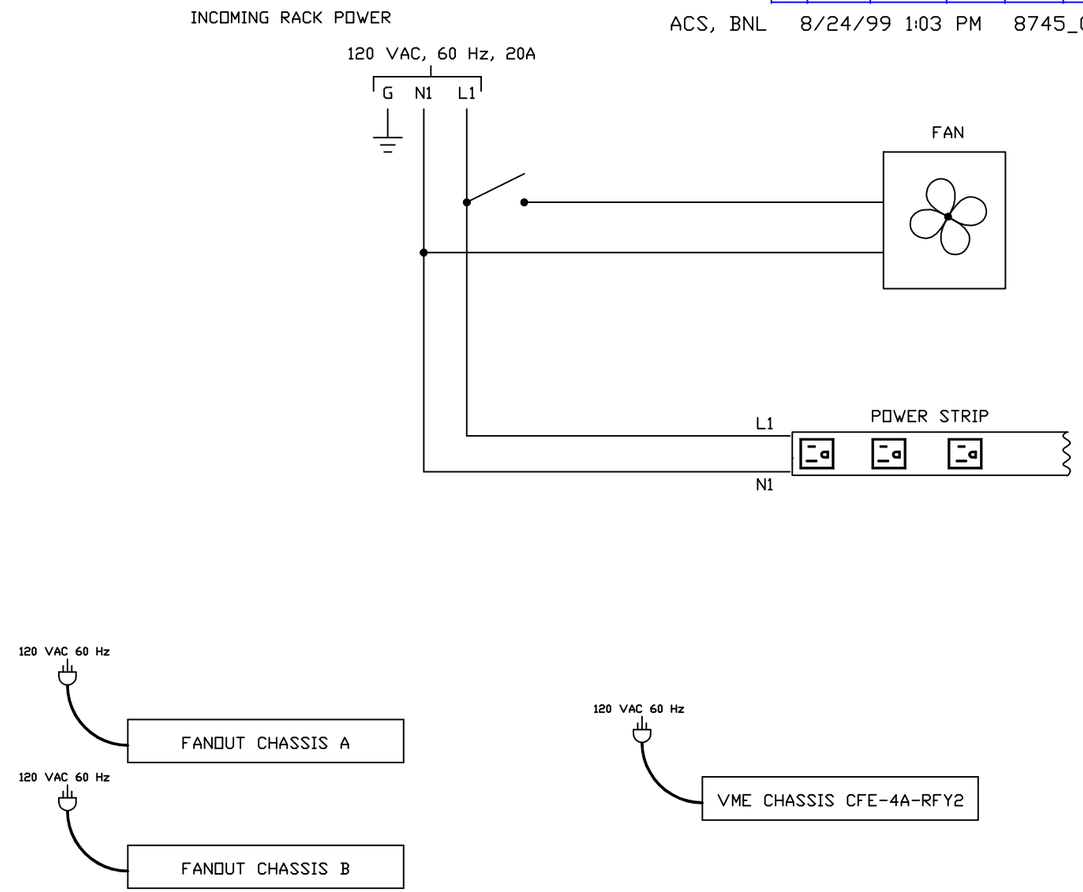

NOTE: ALL 120 VAC, 60 Hz POWER CORDS
PLUG INTO POWER STRIP OUTLETS

RACK R4ACT22

-3	-2	-1	REF DESIGNATOR	ITEM NO.	DESCRIPTION	MAT'L DWG NO./INL NO.
QTY REQD						

INTERPRET IN GENERAL ACCORDANCE WITH ASME Y14.24M-1989

UNLESS OTHERWISE SPECIFIED DIMENSIONS ARE IN INCHES

DECIMAL TOLERANCES
.X ±.030
.XX ±.015
.XXX ±.005
ANGULAR TOLERANCE
± .5°

NA FINISH

BREAK SHARP EDGES
MAX. XX MIN. XX

OUTSTANDING ECN

Q.A. CATEGORY A-3		DATE
DRAWN BY	Ed Koropsak	9/4/98
CHECKED BY		
DESIGN APPROVAL		
ENGINEER APPROVAL	R. MICHNOFF	9/4/98
SUPVR. APPROVAL		

NEXT ASSEMBLY

BROOKHAVEN NATIONAL LABORATORY
UPTON, N.Y. 11973

RHIC CONTROLS WIRING DIAGRAM

SERVICE BLDG. 1004A, RACK R4ACT5, R4ACT22

POWER DISTRIBUTION

SIZE D | DRAWING NUMBER 94028745 | REV. A

MATERIAL: ——— SCALE: NA WEIGHT: – SHEET 4 OF X

1 *AUTOCAD

REV.	ZONE	ECN NO.	DATE	BY	CKR	APP.

ACS, BNL 9/12/00 9:12 AM 8745_05.dwg

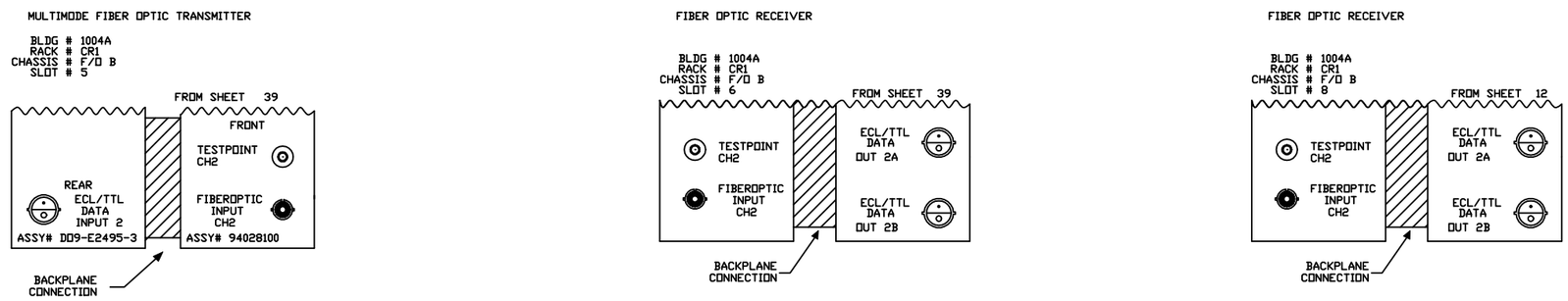

-3	-2	-1	REF DESIGNATOR	ITEM NO.	DESCRIPTION	MAT'L. DWG NO.,BNL NO.
QTY REQD						

INTERPRET IN GENERAL ACCORDANCE WITH ASME Y14.24M-1989

UNLESS OTHERWISE SPECIFIED DIMENSIONS ARE IN INCHES

DECIMAL TOLERANCES
.X ±.030
.XX ±.015
.XXX ±.005
ANGULAR TOLERANCE ± .5°

NA FINISH

BREAK SHARP EDGES MAX. XX MIN. XX

OUTSTANDING ECN

Q.A. CATEGORY A-3		DATE
DRAWN BY	Ed Koropsak	9/4/98
CHECKED BY		
DESIGN APPROVAL		
ENGINEER APPROVAL	R. MICHNOFF	9/4/98
SUPVR. APPROVAL		
NEXT ASSEMBLY		

BROOKHAVEN NATIONAL LABORATORY
UPTON, N.Y. 11973

RHIC CONTROLS WIRING DIAGRAM
SERVICE BLDG. 1004A

SPARE F/O RCVR/XMIT CHANNELS

SIZE D | DRAWING NUMBER 94028745 | REV. A

MATERIAL: ——— SCALE: NA WEIGHT: – SHEET 5 OF X

*AUTOCAD

REV.	ZONE	ECN NO.	DATE	BY	CKR	APP.

CONTROLS- 12/31/01 1:33 PM 8745_06.dwg

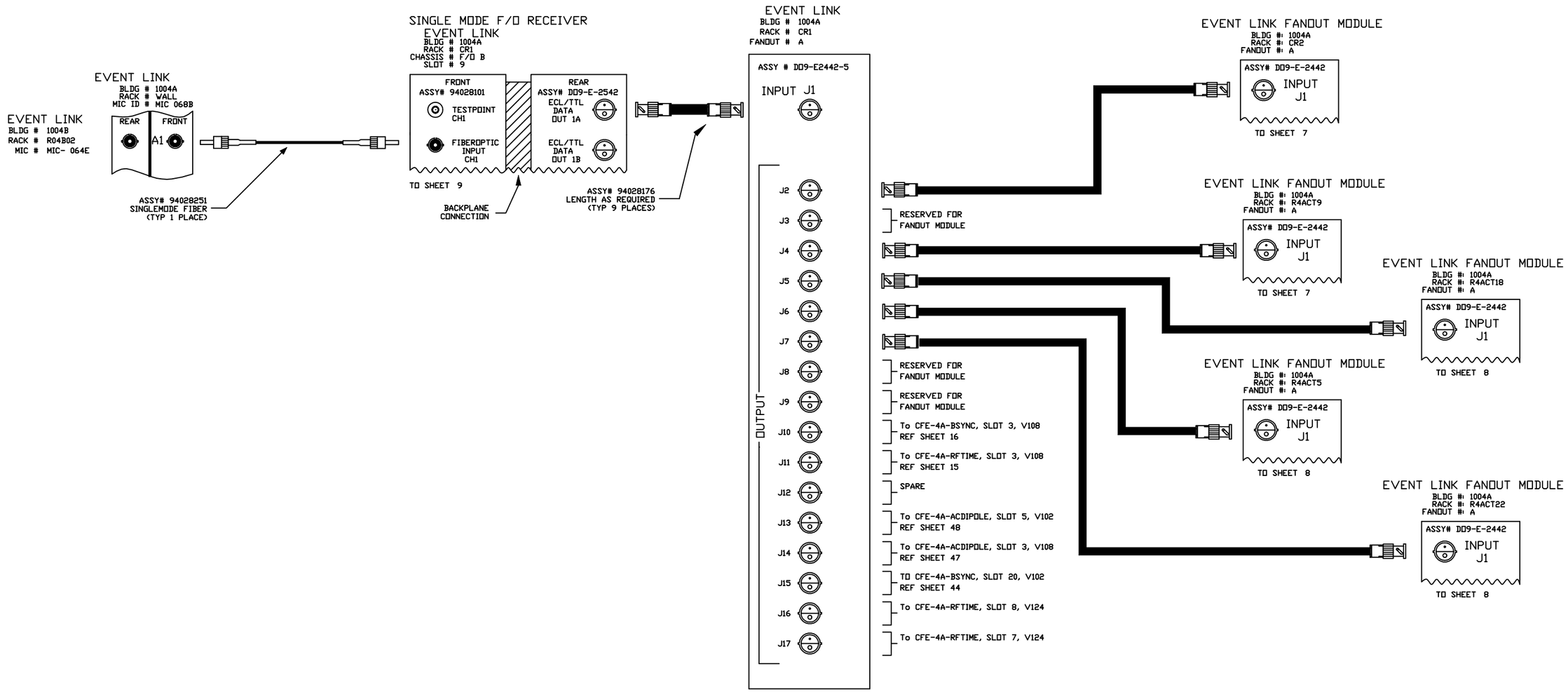

-3	-2	-1	REF DESIGNATOR	ITEM NO.	DESCRIPTION	MAT'L. DWG NO./INL NO.
QTY REQD						

INTERPRET IN GENERAL ACCORDANCE WITH ASME Y14.24M-1989

UNLESS OTHERWISE SPECIFIED DIMENSIONS ARE IN INCHES

DECIMAL TOLERANCES
X ±.030
.XX ±.015
.XXX ±.005
ANGULAR TOLERANCE
± .5°

NA FINISH

BREAK SHARP EDGES
MAX. XX MIN. XX

OUTSTANDING ECN

Q.A. CATEGORY A-3		DATE
DRAWN BY	Ed Koropsak	9/4/98
CHECKED BY		
DESIGN APPROVAL		
ENGINEER APPROVAL	R. MICHNOFF	9/4/98
SUPVR. APPROVAL		

NEXT ASSEMBLY

BROOKHAVEN NATIONAL LABORATORY
UPTON, N.Y. 11973

RHIC CONTROLS WIRING DIAGRAM

SERVICE BLDG. 1004A

EVENT LINK

SIZE D | DRAWING NUMBER 94028745 | REV. A

MATERIAL: ——— SCALE: NA WEIGHT: – SHEET 6 OF X

1 *AUTOCAD

REV.	ZONE	ECN NO.	DATE	BY	CKR	APP.

ACS, BNL 9/13/00 2:24 PM 8745_07.dwg

EVENT LINK FANOUT MODULE

BLDG # 1004A
RACK # CR2
FANOUT # A

FROM SHEET 6
ASSY # DD9-E2442-5

OUTPUT

J2	TO CFE-4A-RFTIME, SLOT 20, V102 REF SHEET 25
J3	TO CFE-4A-RFTIME, SLOT 21, V102 REF SHEET 26
J4	TO CFE-4A-RFTIME, SLOT 18, V102 REF SHEET 26A
J5	TO CFE-4A-RFTIME, SLOT 19, V102 REF SHEET 25A
J6	FUTURE V102
J7	TO CFE-4A-BSYNC, SLOT 21, V120 REF SHEET 39
J8	TO CFE-4A-RFTIME, SLOT 10, V111 REF SHEET X
J9	TO CFE-4A-RFTIME, SLOT 11, V111 REF SHEET X
J10	SPARE
J11	SPARE
J12	SPARE
J13	SPARE
J14	SPARE
J15	SPARE
J16	TO CFE-4A-RFTIME, SLOT 8, V124 REF SHEET 43
J17	TO CFE-4A-RFTIME, SLOT 7, V124 REF SHEET 42

EVENT LINK FANOUT MODULE

BLDG # 1004A
RACK # R4ACT9
FANOUT # A

FROM SHEET 6
ASSY # DD9-E2442-5

OUTPUT

J2	TO CFE-4A-RFB1, SLOT 3, V108 REF SHEET 17
J3	To CFE-4A-RFB1, SLOT 13, V102 REF SHEET 26
J4	To CFE-4A-RFB1, SLOT 14, V102 REF SHEET 27
J5	To CFE-4A-RFB1, SLOT 15, V113 REF SHEET 22
J6	To CFE-4A-RFB1, SLOT 18, V113 REF SHEET 22A
J7	SPARE
J8	SPARE
J9	SPARE
J10	SPARE
J11	To CFE-4A-RFB1, SLOT 10, T215 REF SHEET X
J12	To CFE-4A-RFB1, SLOT 9, T215 REF SHEET X
J13	To CFE-4A-RFB1, SLOT 8, T215 REF SHEET X
J14	To CFE-4A-RFB1, SLOT 7, T215 REF SHEET X
J15	To CFE-4A-RFB1, SLOT 6, T215 REF SHEET X
J16	To CFE-4A-RFB1, SLOT 5, T215 REF SHEET X
J17	To CFE-4A-RFB1, SLOT 4, T215 REF SHEET X

-3	-2	-1	REF DESIGNATOR	ITEM NO.	DESCRIPTION	MAT'L. DWG NO.,BNL NO.
QTY REQD						

INTERPRET IN GENERAL ACCORDANCE WITH ASME Y14.24M-1989

UNLESS OTHERWISE SPECIFIED DIMENSIONS ARE IN INCHES

DECIMAL TOLERANCES
.X ±.030
.XX ±.015
.XXX ±.005
ANGULAR TOLERANCE ± .5°

NA FINISH

BREAK SHARP EDGES MAX. XX MIN. XX

OUTSTANDING ECN

Q.A. CATEGORY A-3		DATE
DRAWN BY	Ed Koropsak	9/4/98
CHECKED BY		
DESIGN APPROVAL		
ENGINEER APPROVAL	R. MICHNOFF	9/4/98
SUPVR. APPROVAL		

NEXT ASSEMBLY

BROOKHAVEN NATIONAL LABORATORY
UPTON, N.Y. 11973

RHIC CONTROLS WIRING DIAGRAM
SERVICE BLDG. 1004A
EVENT LINK

SIZE D | DRAWING NUMBER 94028745 | REV. A

MATERIAL: ——— SCALE: NA WEIGHT: – SHEET 7 OF X

*AUTOCAD

REV.	ZONE	ECN NO.	DATE	BY	CKR	APP.

BNL, BNL 5/10/00 10:33 AM 8745_08.dwg

EVENT LINK FANOUT MODULE

BLDG # 1004A
RACK # R4ACT18
FANOUT # A

FROM SHEET 6
ASSY # DD9-E2442-5

OUTPUT

J2	TO CFE-4A-RFB2, SLOT 3, V108 REF SHEET 18
J3	To CFE-4A-RFB2, SLOT 4, V102 REF SHEET 28
J4	To CFE-4A-RFB2, SLOT 5, V102 REF SHEET 29
J5	TO CFE-4A-RFB2, SLOT 11, DECODER REF RF GROUP
J6	To CFE-4A-RFB2, SLOT 15, V102 REF SHEET 29A
J7	To CFE-4A-RFB2, SLOT 19, V124 REF SHEET X
J8	SPARE
J9	SPARE
J10	SPARE
J11	SPARE
J12	SPARE
J13	SPARE
J14	SPARE
J15	SPARE
J16	TO CFE-4A-RFB3, SLOT 3, V108
J17	TO CFE-4A-RFB3, SLOT 4, V102

EVENT LINK FANOUT MODULE

BLDG # 1004A
RACK # R4ACT5
FANOUT # A

FROM SHEET 6
ASSY # DD9-E2442-5

OUTPUT

J2	TO CFE-4A-RFY1, SLOT 3, V108 REF SHEET 19
J3	TO CFE-4A-RFY1, SLOT 13, V102 REF SHEET 30
J4	TO CFE-4A-RFY1, SLOT 14, V102 REF SHEET 31
J5	TO CFE-4A-RFY1, SLOT 15, V113 REF SHEET 21
J6	TO CFE-4A-RFY1, SLOT 18, V113 REF SHEET 21A
J7	SPARE
J8	SPARE
J9	SPARE
J10	SPARE
J11	TO CFE-4A-RFY1, SLOT 10, T215 REF SHEET X
J12	TO CFE-4A-RFY1, SLOT 9, T215 REF SHEET X
J13	TO CFE-4A-RFY1, SLOT 8, T215 REF SHEET X
J14	TO CFE-4A-RFY1, SLOT 7, T215 REF SHEET X
J15	TO CFE-4A-RFY1, SLOT 6, T215 REF SHEET X
J16	TO CFE-4A-RFY1, SLOT 5, T215 REF SHEET X
J17	TO CFE-4A-RFY1, SLOT 4, T215 REF SHEET X

EVENT LINK FANOUT MODULE

BLDG # 1004A
RACK # R4ACT22
FANOUT # A

FROM SHEET 6
ASSY # DD9-E2442-5

OUTPUT

J2	TO CFE-4A-RFY2, SLOT 3, V108 REF SHEET 20
J3	To CFE-4A-RFY2, SLOT 4, V102 REF SHEET 32
J4	To CFE-4A-RFY2, SLOT 5, V102 REF SHEET 33
J5	TO CFE-4A-RFY2, SLOT 11, DECODER REF RF GROUP
J6	To CFE-4A-RFY2, SLOT 15, V102 REF SHEET 33A
J7	To CFE-4A-RFY2, SLOT 19, V124 REF SHEET X
J8	SPARE
J9	SPARE
J10	SPARE
J11	SPARE
J12	SPARE
J13	SPARE
J14	SPARE
J15	SPARE
J16	TO CFE-4A-RFY3, SLOT 3, V108
J17	TO CFE-4A-RFY3, SLOT 4, V102

-3	-2	-1	REF DESIGNATOR	ITEM NO.	DESCRIPTION	MAT'L. DWG NO.,BNL NO.
QTY REQD						

INTERPRET IN GENERAL ACCORDANCE WITH ASME Y14.24M-1989

UNLESS OTHERWISE SPECIFIED DIMENSIONS ARE IN INCHES

DECIMAL TOLERANCES
.X ±.030
.XX ±.015
.XXX ±.005
ANGULAR TOLERANCE ± .5°

OUTSTANDING ECN

NA FINISH

BREAK SHARP EDGES MAX. XX MIN. XX

Q.A. CATEGORY A-3		DATE
DRAWN BY	Ed Koropsak	9/4/98
CHECKED BY		
DESIGN APPROVAL		
ENGINEER APPROVAL	R. MICHNOFF	9/4/98
SUPVR. APPROVAL		

NEXT ASSEMBLY

BROOKHAVEN NATIONAL LABORATORY
UPTON, N.Y. 11973

RHIC CONTROLS WIRING DIAGRAM
SERVICE BLDG. 1004A
EVENT LINK

SIZE D
94028745
DRAWING NUMBER
REV. A

MATERIAL: ——— SCALE: NA WEIGHT: – SHEET 8 OF X

*AUTOCAD

REV.	ZONE	ECN NO.	DATE	BY	CKR	APP.

C-A, BNL 6/18/01 11:45 AM 8745_09.dwg

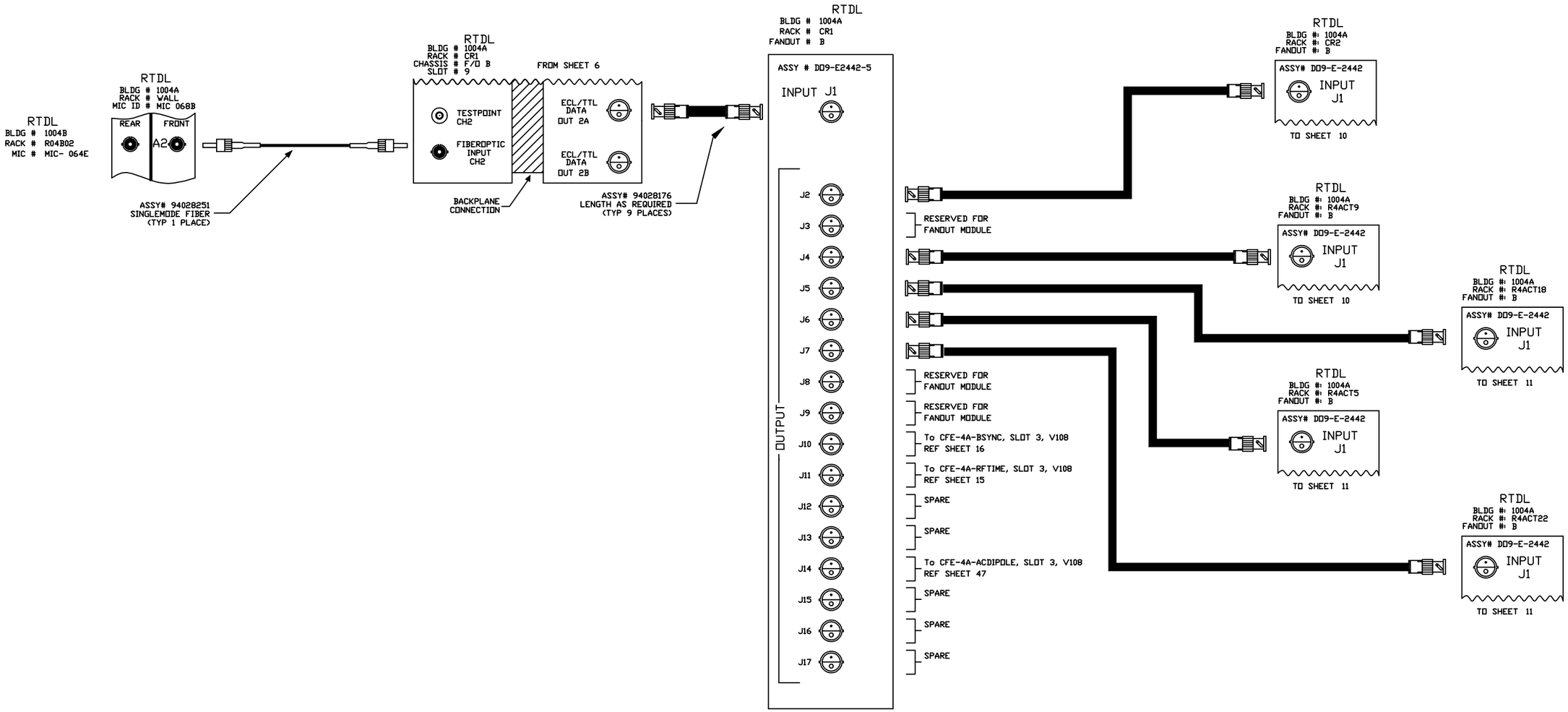

-3	-2	-1	REF DESIGNATOR	ITEM NO.	DESCRIPTION	MAT'L. DWG NO./BNL NO.
QTY REQD						

INTERPRET IN GENERAL ACCORDANCE WITH ASME Y14.24M-1989

UNLESS OTHERWISE SPECIFIED DIMENSIONS ARE IN INCHES

DECIMAL TOLERANCES
X ±.030
.XX ±.015
.XXX ±.005
ANGULAR TOLERANCE
± .5°

NA FINISH

BREAK SHARP EDGES
MAX. XX MIN. XX

OUTSTANDING ECN

Q.A. CATEGORY A-3		DATE
DRAWN BY	Ed Koropsak	9/4/98
CHECKED BY		
DESIGN APPROVAL		
ENGINEER APPROVAL	R. MICHNOFF	9/4/98
SUPVR. APPROVAL		

NEXT ASSEMBLY

BROOKHAVEN NATIONAL LABORATORY
UPTON, N.Y. 11973

RHIC CONTROLS WIRING DIAGRAM
SERVICE BLDG. 1004A
REAL TIME DATA LINK

SIZE D | DRAWING NUMBER 94028745 | REV. A

MATERIAL: ——— SCALE: NA WEIGHT: – SHEET 9 OF X

1 *AUTOCAD

REV.	ZONE	ECN NO.	DATE	BY	CKR	APP.

ACS, BNL 8/24/99 1:39 PM 8745_10.dwg

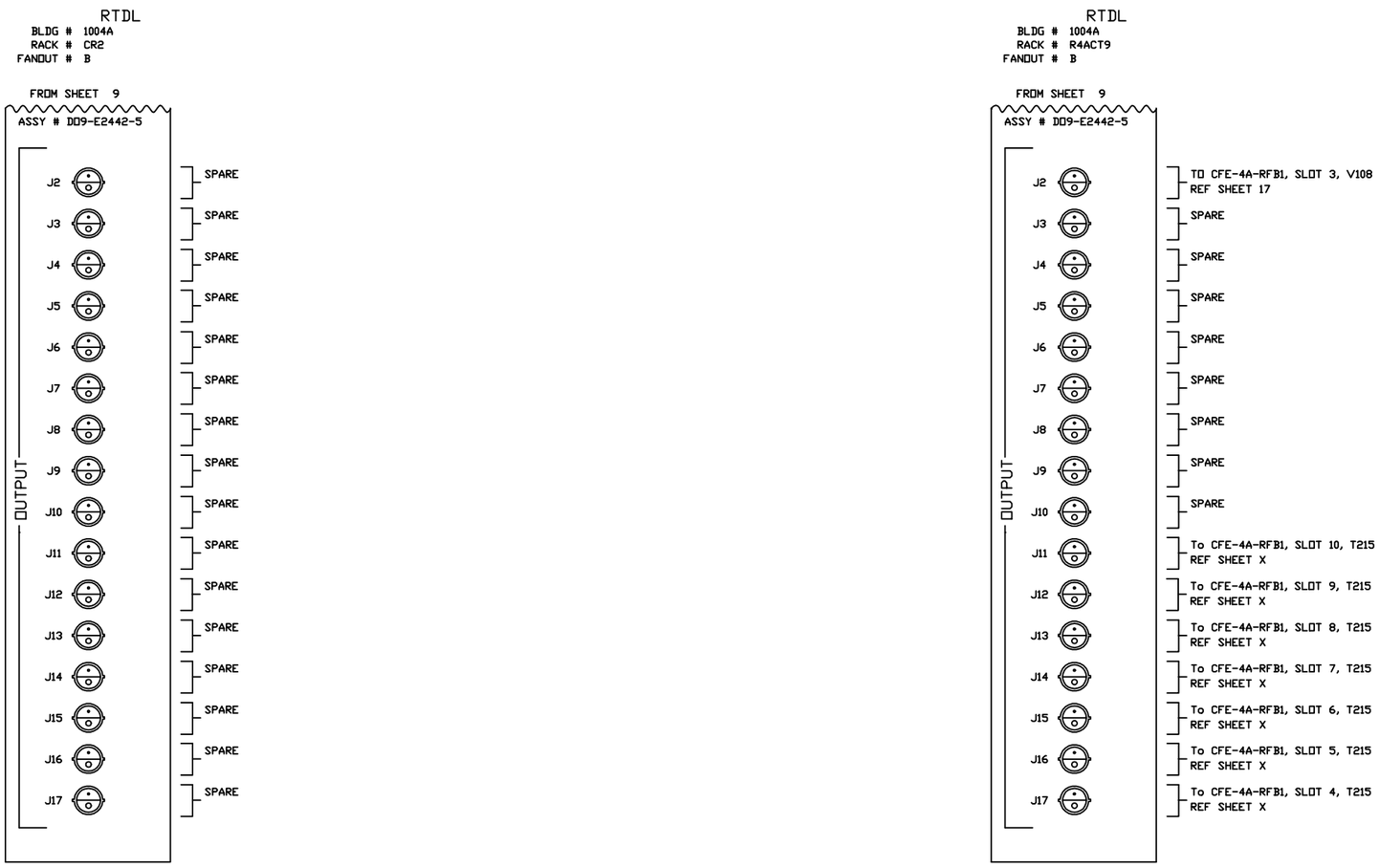

-3	-2	-1	REF DESIGNATOR	ITEM NO.	DESCRIPTION	MAT'L. DWG NO.,BNL NO.
QTY REQD						

INTERPRET IN GENERAL ACCORDANCE WITH ASME Y14.24M-1989

UNLESS OTHERWISE SPECIFIED DIMENSIONS ARE IN INCHES

DECIMAL TOLERANCES
.X ±.030
.XX ±.015
.XXX ±.005
ANGULAR TOLERANCE ± .5°

NA FINISH

BREAK SHARP EDGES MAX. XX MIN. XX

OUTSTANDING ECN

Q.A. CATEGORY A-3		DATE
DRAWN BY	Ed Koropsak	9/4/98
CHECKED BY		
DESIGN APPROVAL		
ENGINEER APPROVAL	R. MICHNOFF	9/4/98
SUPVR. APPROVAL		

NEXT ASSEMBLY

BROOKHAVEN NATIONAL LABORATORY
UPTON, N.Y. 11973

RHIC CONTROLS WIRING DIAGRAM
SERVICE BLDG. 1004A

REAL TIME DATA LINK

SIZE D | DRAWING NUMBER 94028745 | REV. A

MATERIAL: ——— SCALE: NA WEIGHT: – SHEET 10 OF X

*AUTOCAD

REV.	ZONE	ECN NO.	DATE	BY	CKR	APP.

BNL, BNL 5/10/00 10:36 AM 8745_11.dwg

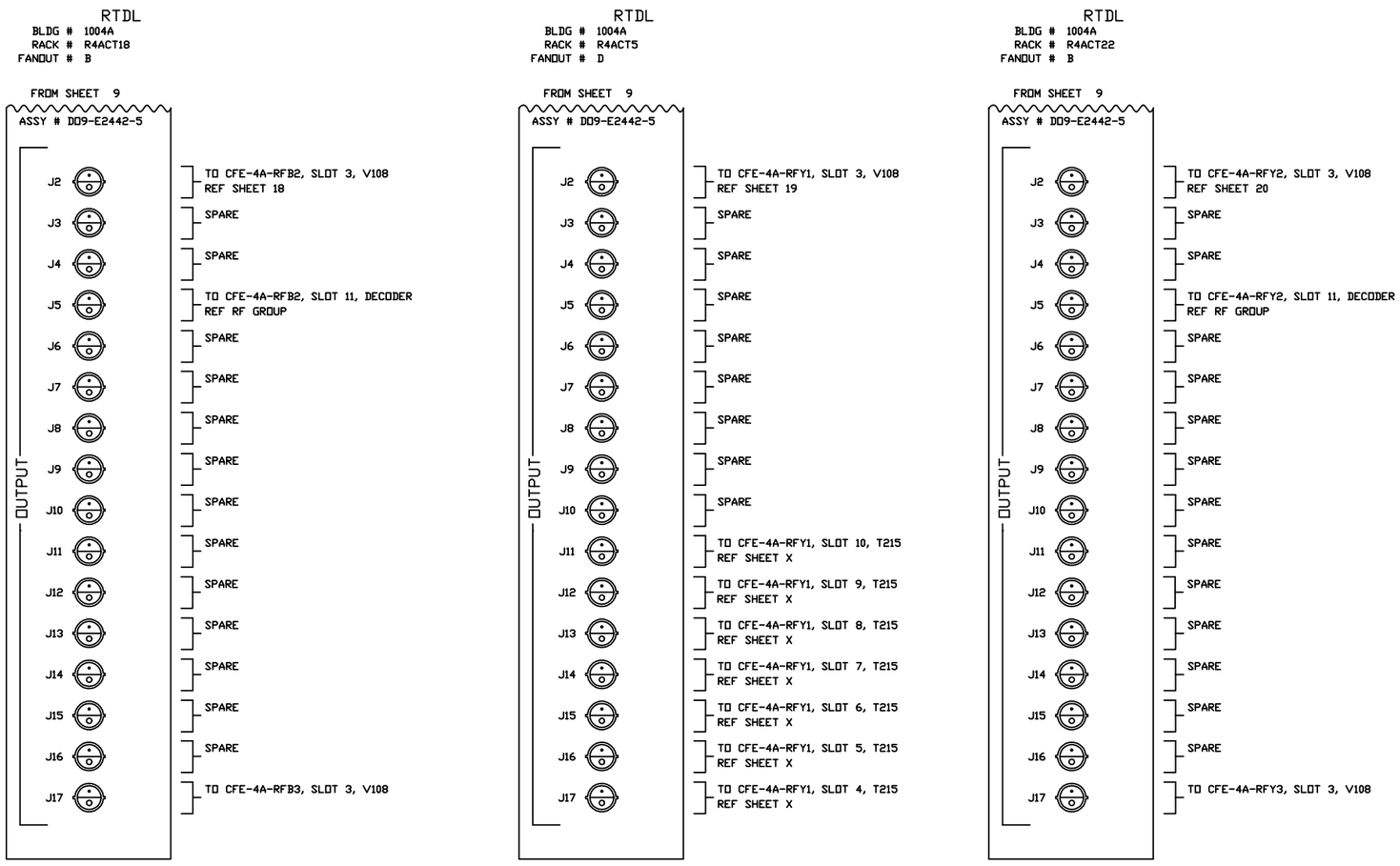

-3	-2	-1	REF DESIGNATOR	ITEM NO.	DESCRIPTION	MAT'L. DWG NO.,BNL NO.
QTY REQD						

INTERPRET IN GENERAL ACCORDANCE WITH ASME Y14.24M-1989

UNLESS OTHERWISE SPECIFIED DIMENSIONS ARE IN INCHES

DECIMAL TOLERANCES
.X ±.030
.XX ±.015
.XXX ±.005
ANGULAR TOLERANCE ± .5°

NA FINISH

BREAK SHARP EDGES MAX. XX MIN. XX

OUTSTANDING ECN

Q.A. CATEGORY A-3		DATE
DRAWN BY	Ed Koropsak	9/4/98
CHECKED BY		
DESIGN APPROVAL		
ENGINEER APPROVAL	R. MICHNOFF	9/4/98
SUPVR. APPROVAL		

NEXT ASSEMBLY

BROOKHAVEN NATIONAL LABORATORY
UPTON, N.Y. 11973

RHIC CONTROLS WIRING DIAGRAM
SERVICE BLDG. 1004A

REAL TIME DATA LINK

SIZE D | DRAWING NUMBER 94028745 | REV. A

MATERIAL: ——— SCALE: NA WEIGHT: – SHEET 11 OF X

*AUTOCAD

REV.	ZONE	ECN NO.	DATE	BY	CKR	APP.

C-A, BNL 6/29/01 4:04 PM 8745_12.dwg

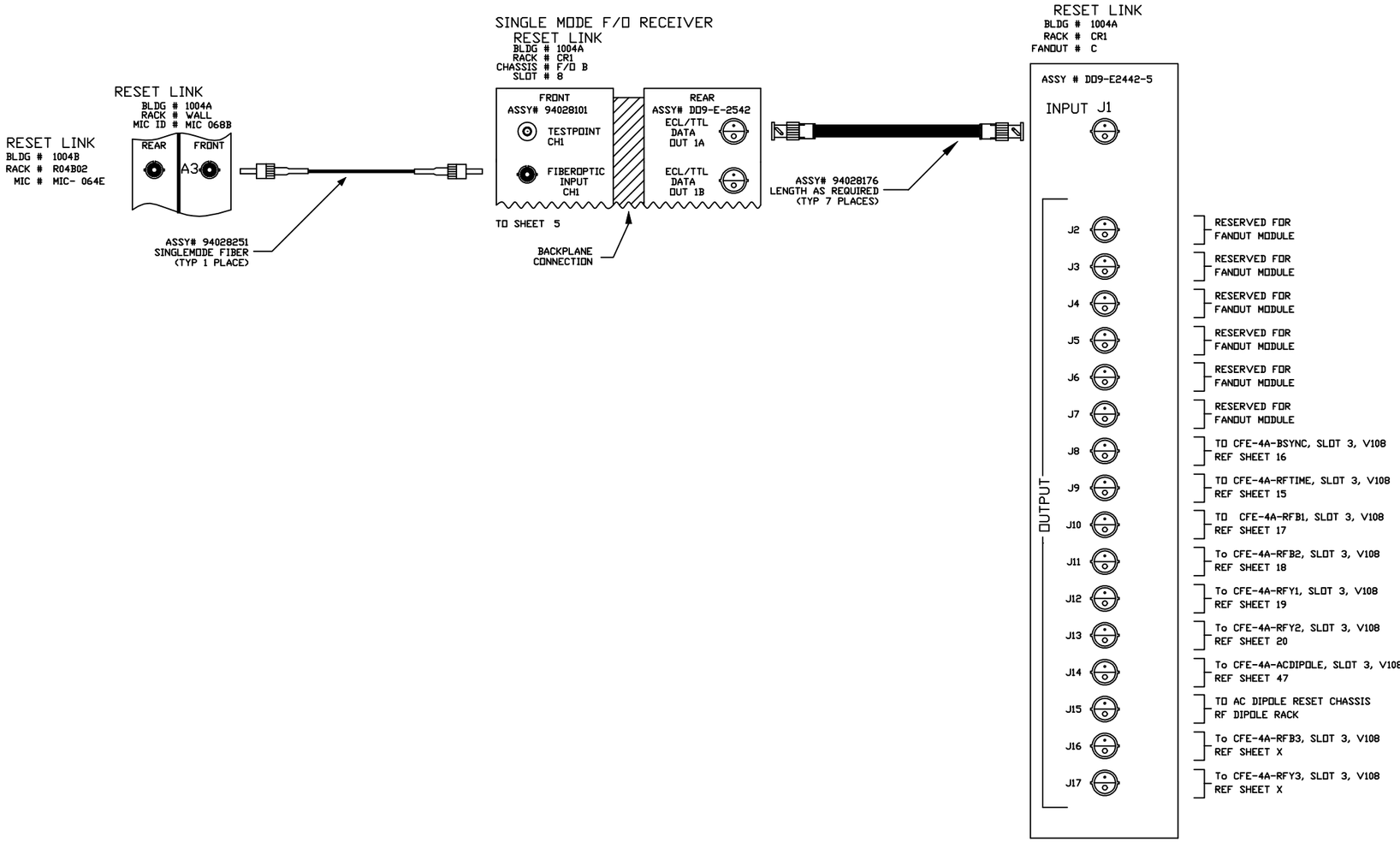

-3	-2	-1	REF DESIGNATOR	ITEM NO.	DESCRIPTION	MAT'L. DWG NO./BNL NO.
QTY REQD						

INTERPRET IN GENERAL ACCORDANCE WITH ASME Y14.24M-1989

UNLESS OTHERWISE SPECIFIED DIMENSIONS ARE IN INCHES

DECIMAL TOLERANCES
.X ±.030
.XX ±.015
.XXX ±.005
ANGULAR TOLERANCE
± .5°

NA FINISH

BREAK SHARP EDGES
MAX. XX MIN. XX

OUTSTANDING ECN

Q.A. CATEGORY A-3		DATE
DRAWN BY	Ed Koropsak	9/4/98
CHECKED BY		
DESIGN APPROVAL		
ENGINEER APPROVAL	R. MICHNOFF	9/4/98
SUPVR. APPROVAL		

NEXT ASSEMBLY

BROOKHAVEN NATIONAL LABORATORY
UPTON, N.Y. 11973

RHIC CONTROLS WIRING DIAGRAM
SERVICE BLDG. 1004A
RESET LINK

SIZE D | DRAWING NUMBER 94028745 | REV. A

MATERIAL: ——— SCALE: NA WEIGHT: – SHEET 12 OF X

*AUTOCAD

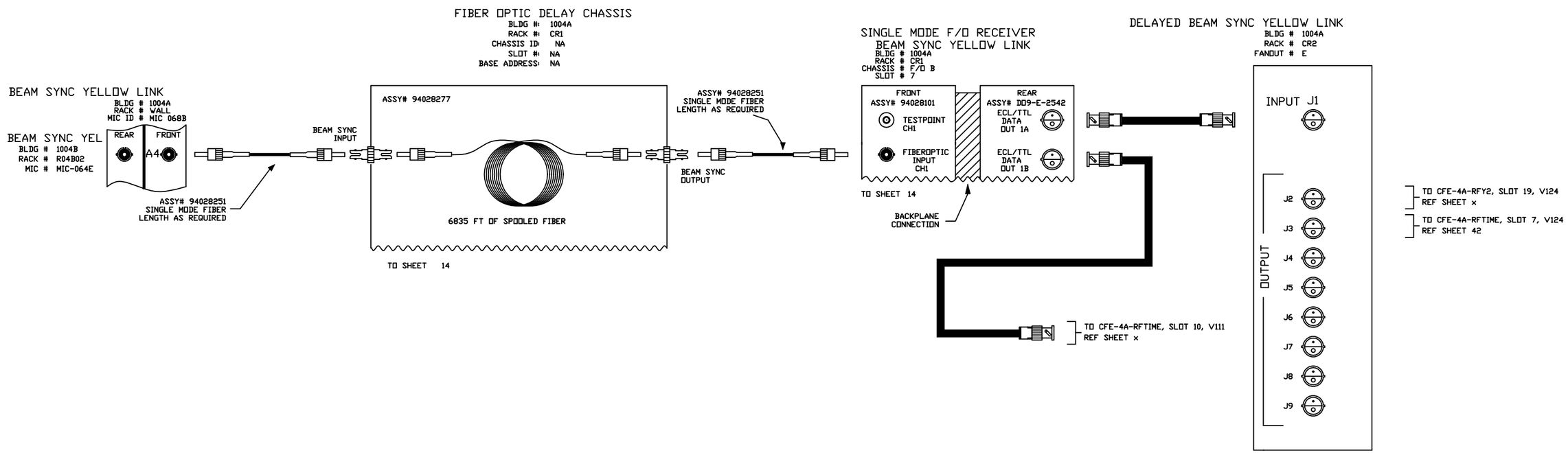

-3	-2	-1	REF DESIGNATOR	ITEM NO.	DESCRIPTION	MAT'L DWG NO.,BNL NO.
QTY REQD						

INTERPRET IN GENERAL ACCORDANCE WITH ASME Y14.24M-1989

UNLESS OTHERWISE SPECIFIED DIMENSIONS ARE IN INCHES

DECIMAL TOLERANCES
.X ±.030
.XX ±.015
.XXX ±.005
ANGULAR TOLERANCE
± .5°

NA FINISH

BREAK SHARP EDGES
MAX. XX MIN. XX

OUTSTANDING ECN

Q.A. CATEGORY A-3		DATE
DRAWN BY	Ed Koropsak	9/4/98
CHECKED BY		
DESIGN APPROVAL		
ENGINEER APPROVAL	R. MICHNOFF	9/4/98
SUPVR. APPROVAL		

NEXT ASSEMBLY

BROOKHAVEN NATIONAL LABORATORY
UPTON, N.Y. 11973

RHIC CONTROLS WIRING DIAGRAM
SERVICE BLDG. 1004A
BEAM SYNC YELLOW LINK

SIZE D | DRAWING NUMBER 94028745 | REV. A

MATERIAL: ——— SCALE: NA WEIGHT: – SHEET 13 OF 52

*AUTOCAD

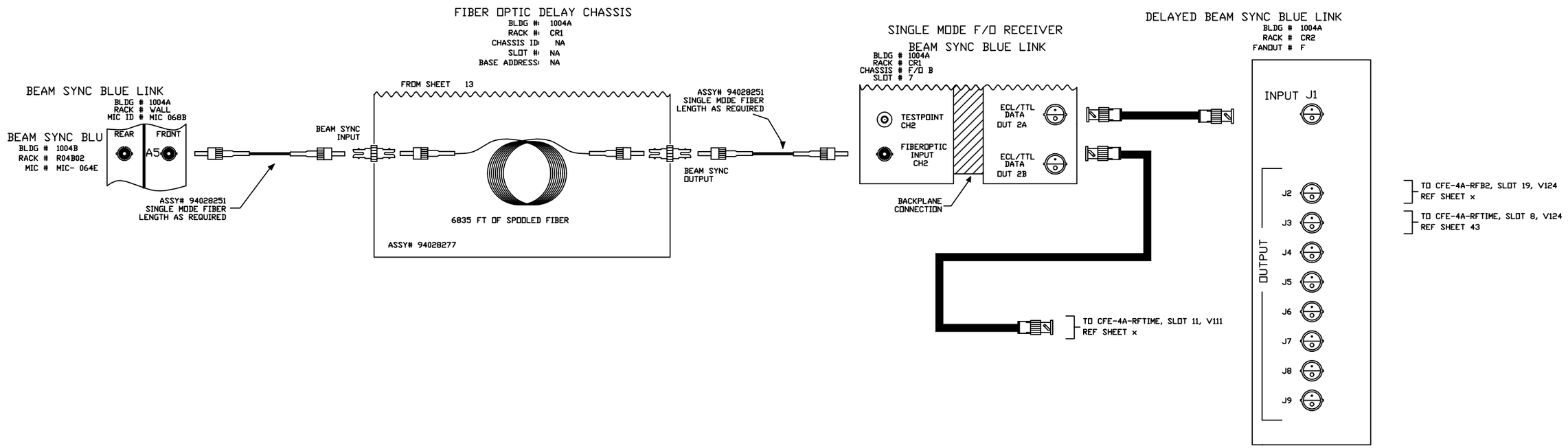

-3	-2	-1	REF DESIGNATOR	ITEM NO.	DESCRIPTION	MAT'L DWG NO.,BNL NO.
QTY REQD						

INTERPRET IN GENERAL ACCORDANCE WITH ASME Y14.24M-1989

UNLESS OTHERWISE SPECIFIED DIMENSIONS ARE IN INCHES
DECIMAL TOLERANCES
.X ±.030
.XX ±.015
.XXX ±.005
ANGULAR TOLERANCE
± .5°

NA FINISH — BREAK SHARP EDGES MAX. XX MIN. XX

OUTSTANDING ECN

Q.A. CATEGORY A-3	DATE	
DRAWN BY Ed Koropsak	9/4/98	
CHECKED BY		
DESIGN APPROVAL		
ENGINEER APPROVAL R. MICHNOFF	9/4/98	
SUPVR. APPROVAL		

NEXT ASSEMBLY

BROOKHAVEN NATIONAL LABORATORY
UPTON, N.Y. 11973

RHIC CONTROLS WIRING DIAGRAM
ALCOVE 1004A
BEAM SYNC BLUE LINK

SIZE D — DRAWING NUMBER 94028745 — REV. A

MATERIAL: ——— SCALE: NA WEIGHT: – SHEET 14 OF X

*AUTOCAD

REV.	ZONE	ECN NO.	DATE	BY	CKR	APP.

ACS, BNL 9/12/00 11:01 AM 8745_15.dwg

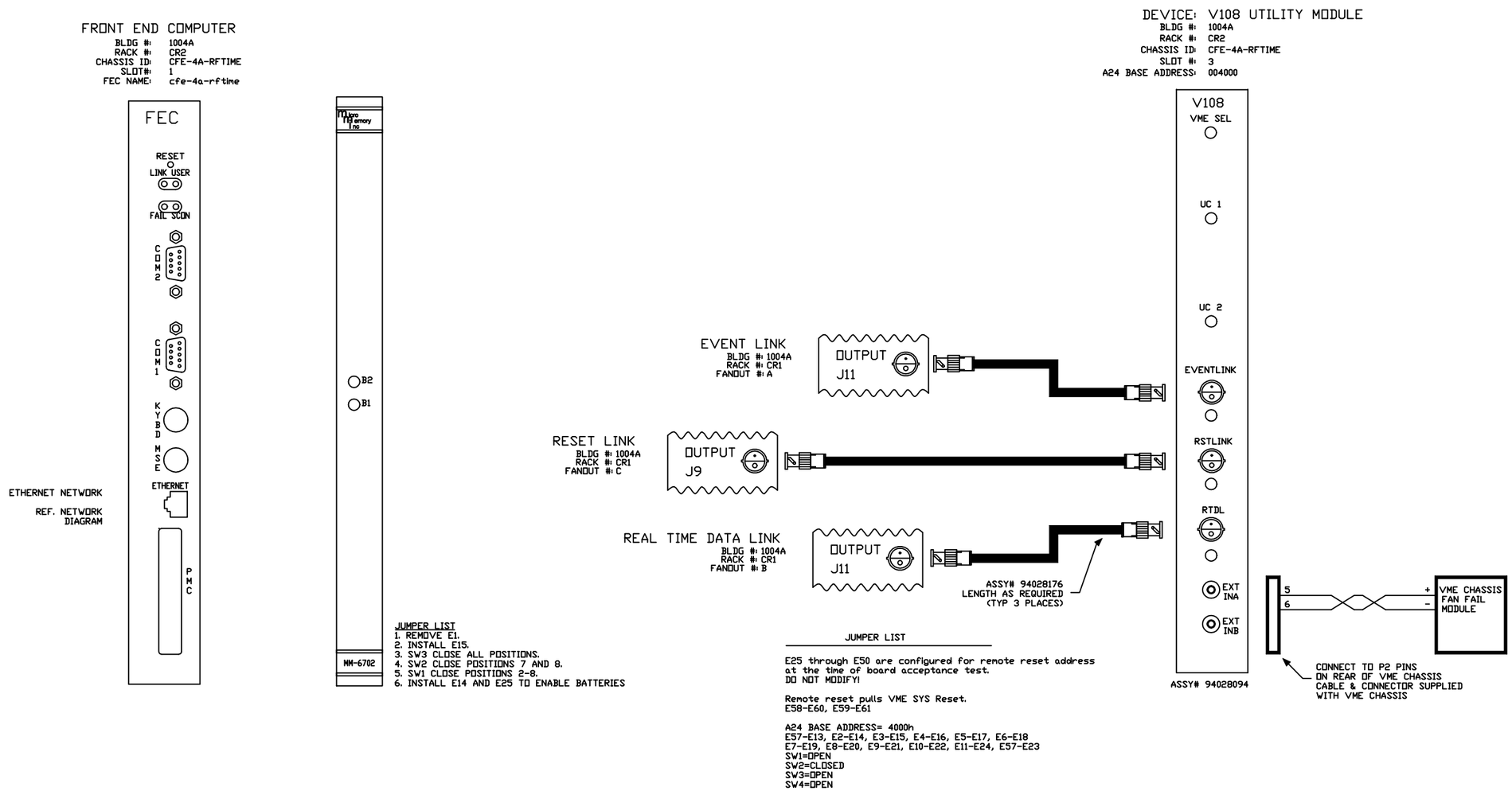

-3	-2	-1	REF DESIGNATOR	ITEM NO.	DESCRIPTION	MAT'L. DWG NO./BNL NO.
QTY REQD						

INTERPRET IN GENERAL ACCORDANCE WITH ASME Y14.24M-1989

UNLESS OTHERWISE SPECIFIED DIMENSIONS ARE IN INCHES

DECIMAL TOLERANCES
.X ±.030
.XX ±.015
.XXX ±.005
ANGULAR TOLERANCE
± .5°

NA FINISH — BREAK SHARP EDGES MAX. XX MIN. XX

OUTSTANDING ECN

Q.A. CATEGORY A-3		DATE
DRAWN BY	Ed Koropsak	9/4/98
CHECKED BY		
DESIGN APPROVAL		
ENGINEER APPROVAL	R. MICHNOFF	9/4/98
SUPVR. APPROVAL		
NEXT ASSEMBLY		

BROOKHAVEN NATIONAL LABORATORY
UPTON, N.Y. 11973

RHIC CONTROLS WIRING DIAGRAM

BLDG. 1004A, VME CHASSIS CFE-4A-RFTIME

FT END COMP/V108 UTIL MODULE

SIZE D — DRAWING NUMBER 94028745 — REV. A

MATERIAL: ——— SCALE: NA WEIGHT: – SHEET 15 OF X

*AUTOCAD

REV.	ZONE	ECN NO.	DATE	BY	CKR	APP.

ACS, BNL 9/12/00 11:03 AM 8745_16.dwg

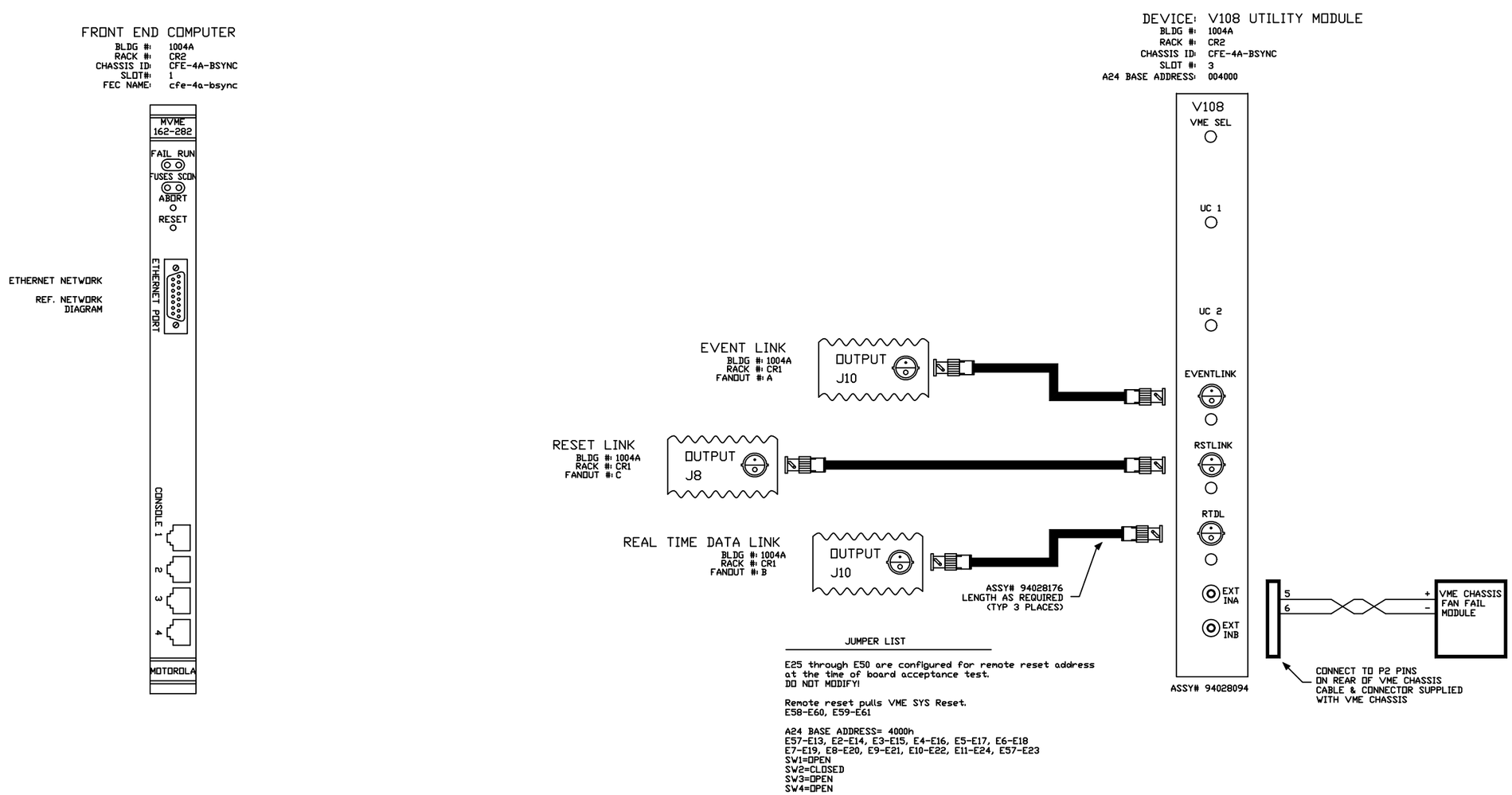

JUMPER LIST

E25 through E50 are configured for remote reset address at the time of board acceptance test.
DO NOT MODIFY!

Remote reset pulls VME SYS Reset.
E58-E60, E59-E61

A24 BASE ADDRESS= 4000h
E57-E13, E2-E14, E3-E15, E4-E16, E5-E17, E6-E18
E7-E19, E8-E20, E9-E21, E10-E22, E11-E24, E57-E23
SW1=OPEN
SW2=CLOSED
SW3=OPEN
SW4=OPEN

-3	-2	-1	REF DESIGNATOR	ITEM NO.	DESCRIPTION	MAT'L DWG NO./BNL NO.
QTY REQD						

INTERPRET IN GENERAL ACCORDANCE WITH ASME Y14.24M-1989

UNLESS OTHERWISE SPECIFIED DIMENSIONS ARE IN INCHES

DECIMAL TOLERANCES
.X ±.030
.XX ±.015
.XXX ±.005
ANGULAR TOLERANCE
± .5°

OUTSTANDING ECN

NA FINISH

BREAK SHARP EDGES
MAX. XX MIN. XX

Q.A. CATEGORY A-3		DATE	BROOKHAVEN NATIONAL LABORATORY UPTON, N.Y. 11973
DRAWN BY	Ed Koropsak	9/4/98	
CHECKED BY			RHIC CONTROLS WIRING DIAGRAM
DESIGN APPROVAL			BLDG. 1004A, VME CHASSIS CFE-4A-BSYNC
ENGINEER APPROVAL	R. MICHNOFF	9/4/98	FT END COMP/V108 UTIL MODULE
SUPVR. APPROVAL			SIZE D — 94028745 — REV. A
NEXT ASSEMBLY			DRAWING NUMBER

MATERIAL: ——— SCALE: NA WEIGHT: – SHEET 16 OF X

1 *AUTOCAD

ACS, BNL 9/12/00 11:04 AM 8745_17.dwg

REV.	ZONE	ECN NO.	DATE	BY	CKR	APP.

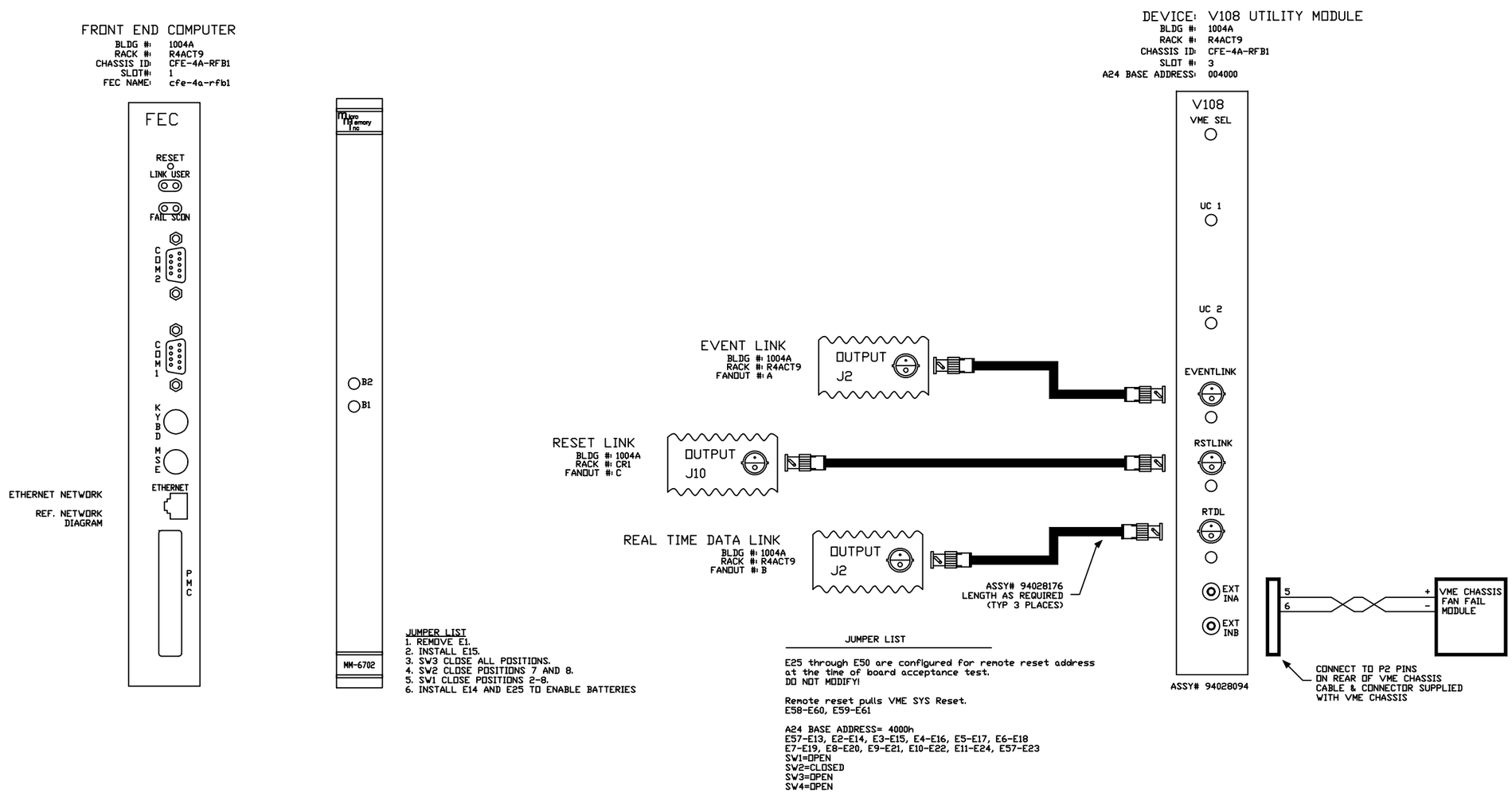

JUMPER LIST
1. REMOVE E1.
2. INSTALL E15.
3. SW3 CLOSE ALL POSITIONS.
4. SW2 CLOSE POSITIONS 7 AND 8.
5. SW1 CLOSE POSITIONS 2-8.
6. INSTALL E14 AND E25 TO ENABLE BATTERIES

JUMPER LIST

E25 through E50 are configured for remote reset address at the time of board acceptance test.
DO NOT MODIFY!

Remote reset pulls VME SYS Reset.
E58-E60, E59-E61

A24 BASE ADDRESS= 4000h
E57-E13, E2-E14, E3-E15, E4-E16, E5-E17, E6-E18
E7-E19, E8-E20, E9-E21, E10-E22, E11-E24, E57-E23
SW1=OPEN
SW2=CLOSED
SW3=OPEN
SW4=OPEN

-3	-2	-1	REF DESIGNATOR	ITEM NO.	DESCRIPTION	MAT'L. DWG NO./INL NO.
QTY REQD						

INTERPRET IN GENERAL ACCORDANCE WITH ASME Y14.24M-1989	Q.A. CATEGORY A-3	DATE	BROOKHAVEN NATIONAL LABORATORY UPTON, N.Y. 11973
UNLESS OTHERWISE SPECIFIED DIMENSIONS ARE IN INCHES	DRAWN BY Ed Koropsak	9/4/98	RHIC CONTROLS WIRING DIAGRAM
DECIMAL TOLERANCES .X ±.030 .XX ±.015 .XXX ±.005 ANGULAR TOLERANCE ± .5°	CHECKED BY		BLDG. 1004A, VME CHASSIS CFE-4A-RFB1
	DESIGN APPROVAL		FT END COMP/V108 UTIL MODULE
	ENGINEER APPROVAL R. MICHNOFF	9/4/98	
	SUPVR. APPROVAL		SIZE D — 94028745 — REV. A
NA FINISH	BREAK SHARP EDGES MAX. XX MIN. XX	NEXT ASSEMBLY	DRAWING NUMBER
OUTSTANDING ECN			MATERIAL: ——— SCALE: NA WEIGHT: – SHEET 17 OF X

8 7 6 5 4 3 2 1 *AUTOCAD

REV.	ZONE	ECN NO.	DATE	BY	CKR	APP.

ACS, BNL 9/12/00 11:05 AM 8745_18.dwg

FRONT END COMPUTER
BLDG #: 1004A
RACK #: R4ACT18
CHASSIS ID: CFE-4A-RFB2
SLOT#: 1
FEC NAME: cfe-4a-rfb2

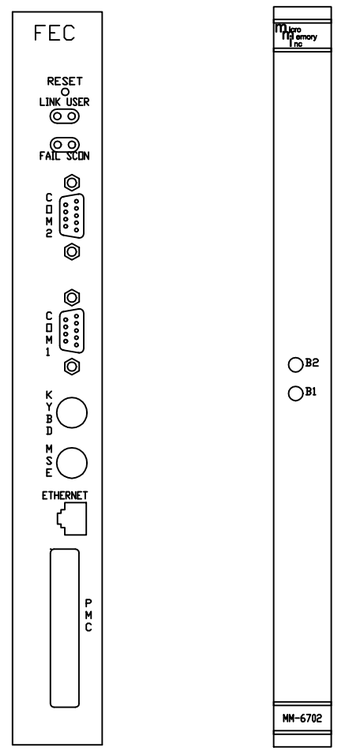

ETHERNET NETWORK

REF. NETWORK DIAGRAM

JUMPER LIST
1. REMOVE E1.
2. INSTALL E15.
3. SW3 CLOSE ALL POSITIONS.
4. SW2 CLOSE POSITIONS 7 AND 8.
5. SW1 CLOSE POSITIONS 2-8.
6. INSTALL E14 AND E25 TO ENABLE BATTERIES

DEVICE: V108 UTILITY MODULE
BLDG #: 1004A
RACK #: R4ACT18
CHASSIS ID: CFE-4A-RFB2
SLOT #: 3
A24 BASE ADDRESS: 004000

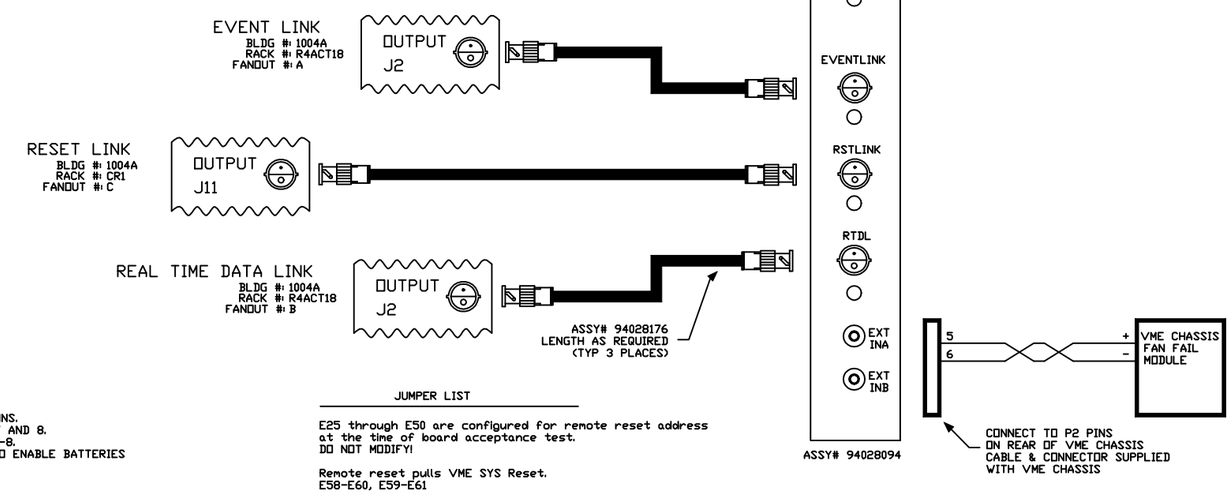

JUMPER LIST

E25 through E50 are configured for remote reset address at the time of board acceptance test.
DO NOT MODIFY!

Remote reset pulls VME SYS Reset.
E58-E60, E59-E61

A24 BASE ADDRESS= 4000h
E57-E13, E2-E14, E3-E15, E4-E16, E5-E17, E6-E18
E7-E19, E8-E20, E9-E21, E10-E22, E11-E24, E57-E23
SW1=OPEN
SW2=CLOSED
SW3=OPEN
SW4=OPEN

-3	-2	-1	REF DESIGNATOR	ITEM NO.	DESCRIPTION	MAT'L. DWG NO./BNL NO.
QTY REQD						

INTERPRET IN GENERAL ACCORDANCE WITH ASME Y14.24M-1989

UNLESS OTHERWISE SPECIFIED DIMENSIONS ARE IN INCHES

DECIMAL TOLERANCES
.X ±.030
.XX ±.015
.XXX ±.005
ANGULAR TOLERANCE
± .5°

NA FINISH

BREAK SHARP EDGES
MAX. XX MIN. XX

OUTSTANDING ECN

Q.A. CATEGORY A-3		DATE
DRAWN BY	Ed Koropsak	9/4/98
CHECKED BY		
DESIGN APPROVAL		
ENGINEER APPROVAL	R. MICHNOFF	9/4/98
SUPVR. APPROVAL		

NEXT ASSEMBLY

BROOKHAVEN NATIONAL LABORATORY
UPTON, N.Y. 11973

RHIC CONTROLS WIRING DIAGRAM
BLDG. 1004A, VME CHASSIS CFE-4A-RFB2
FT END COMP/V108 UTIL MODULE

SIZE D | DRAWING NUMBER 94028745 | REV. A

MATERIAL: ——— SCALE: NA WEIGHT: – SHEET 18 OF X

*AUTOCAD

REV.	ZONE	ECN NO.	DATE	BY	CKR	APP.

ACS, BNL 9/12/00 11:06 AM 8745_19.dwg

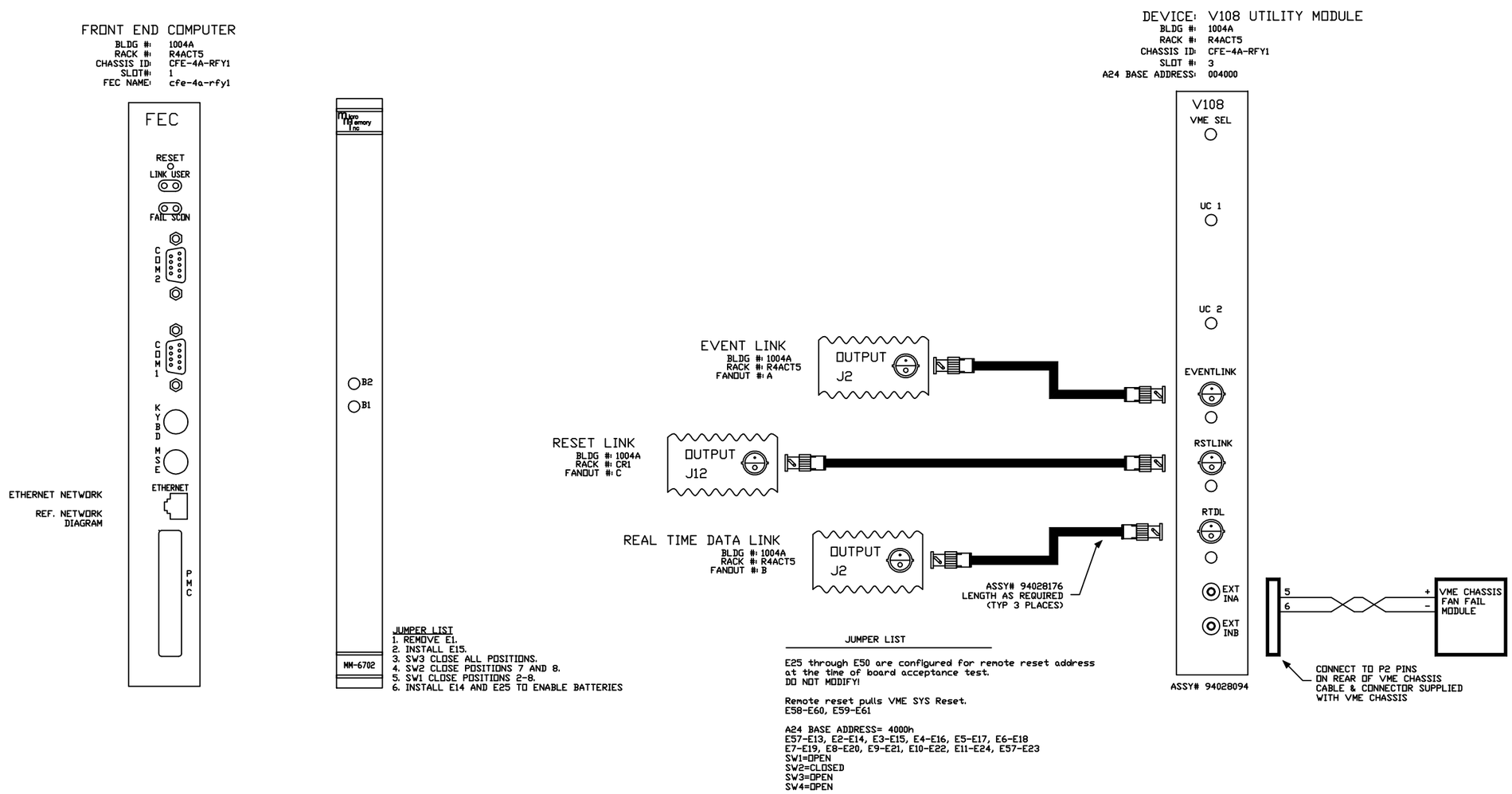

-3	-2	-1	REF DESIGNATOR	ITEM NO.	DESCRIPTION	MAT'L. DWG NO./BNL NO.
QTY REQD						

INTERPRET IN GENERAL ACCORDANCE WITH ASME Y14.24M-1989

UNLESS OTHERWISE SPECIFIED DIMENSIONS ARE IN INCHES

DECIMAL TOLERANCES
.X ±.030
.XX ±.015
.XXX ±.005
ANGULAR TOLERANCE
± .5°

NA FINISH — BREAK SHARP EDGES — MAX. XX MIN. XX

OUTSTANDING ECN

Q.A. CATEGORY A-3		DATE
DRAWN BY	Ed Koropsak	9/4/98
CHECKED BY		
DESIGN APPROVAL		
ENGINEER APPROVAL	R. MICHNOFF	9/4/98
SUPVR. APPROVAL		

NEXT ASSEMBLY

BROOKHAVEN NATIONAL LABORATORY
UPTON, N.Y. 11973

RHIC CONTROLS WIRING DIAGRAM

BLDG. 1004A, VME CHASSIS CFE-4A-RFY1

FT END COMP/V108 UTIL MODULE

SIZE D — DRAWING NUMBER 94028745 — REV. A

MATERIAL: ——— SCALE: NA WEIGHT: – SHEET 19 OF X

*AUTOCAD

REV.	ZONE	ECN NO.	DATE	BY	CKR	APP.

ACS, BNL 9/12/00 11:07 AM 8745_20.dwg

FRONT END COMPUTER
BLDG #: 1004A
RACK #: R4ACT22
CHASSIS ID: CFE-4A-RFY2
SLOT#: 1
FEC NAME: cfe-4a-rfy2

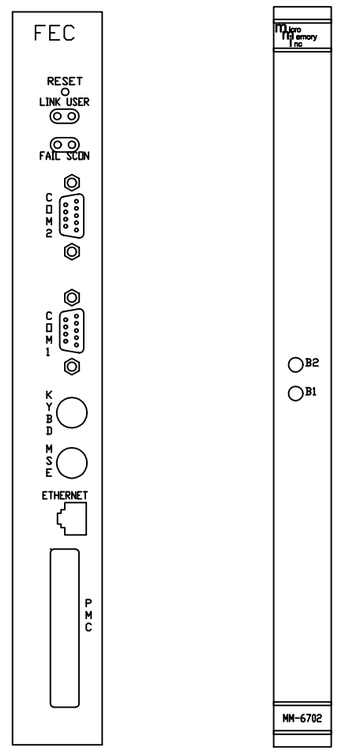

ETHERNET NETWORK

REF. NETWORK DIAGRAM

JUMPER LIST
1. REMOVE E1.
2. INSTALL E15.
3. SW3 CLOSE ALL POSITIONS.
4. SW2 CLOSE POSITIONS 7 AND 8.
5. SW1 CLOSE POSITIONS 2-8.
6. INSTALL E14 AND E25 TO ENABLE BATTERIES

DEVICE: V108 UTILITY MODULE
BLDG #: 1004A
RACK #: R4ACT22
CHASSIS ID: CFE-4A-RFY2
SLOT #: 3
A24 BASE ADDRESS: 004000

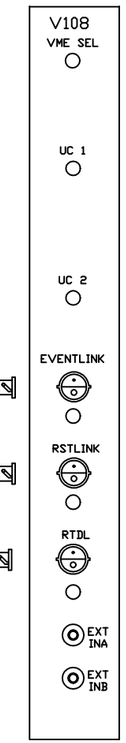

ASSY# 94028094

EVENT LINK
BLDG #: 1004A
RACK #: R4ACT22
FANOUT #: A

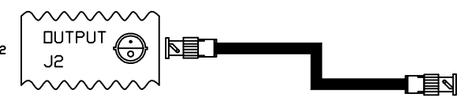

RESET LINK
BLDG #: 1004A
RACK #: CR1
FANOUT #: C

REAL TIME DATA LINK
BLDG #: 1004A
RACK #: R4ACT22
FANOUT #: B

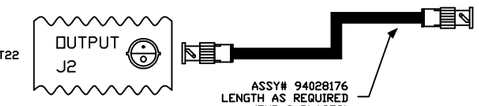

ASSY# 94028176
LENGTH AS REQUIRED
(TYP 3 PLACES)

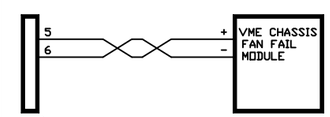

CONNECT TO P2 PINS
ON REAR OF VME CHASSIS
CABLE & CONNECTOR SUPPLIED
WITH VME CHASSIS

JUMPER LIST

E25 through E50 are configured for remote reset address at the time of board acceptance test.
DO NOT MODIFY!

Remote reset pulls VME SYS Reset.
E58-E60, E59-E61

A24 BASE ADDRESS= 4000h
E57-E13, E2-E14, E3-E15, E4-E16, E5-E17, E6-E18
E7-E19, E8-E20, E9-E21, E10-E22, E11-E24, E57-E23
SW1=OPEN
SW2=CLOSED
SW3=OPEN
SW4=OPEN

-3	-2	-1	REF DESIGNATOR	ITEM NO.	DESCRIPTION	MAT'L. DWG NO./INL NO.
QTY REQD						

INTERPRET IN GENERAL ACCORDANCE WITH ASME Y14.24M-1989

UNLESS OTHERWISE SPECIFIED DIMENSIONS ARE IN INCHES

DECIMAL TOLERANCES
.X ±.030
.XX ±.015
.XXX ±.005
ANGULAR TOLERANCE
± .5°

NA FINISH

BREAK SHARP EDGES
MAX. XX MIN. XX

OUTSTANDING ECN

Q.A. CATEGORY A-3		DATE
DRAWN BY	Ed Koropsak	9/4/98
CHECKED BY		
DESIGN APPROVAL		
ENGINEER APPROVAL	R. MICHNOFF	9/4/98
SUPVR. APPROVAL		

NEXT ASSEMBLY

BROOKHAVEN NATIONAL LABORATORY
UPTON, N.Y. 11973

RHIC CONTROLS WIRING DIAGRAM
BLDG. 1004A, VME CHASSIS CFE-4A-RFY2
FT END COMP/V108 UTIL MODULE

SIZE D
94028745
DRAWING NUMBER
REV. A

MATERIAL: ——— SCALE: NA WEIGHT: – SHEET 20 OF X

*AUTOCAD

REV.	ZONE	ECN NO.	DATE	BY	CKR	APP.

BNL, BNL 5/10/00 11:34 AM 8745_21.dwg

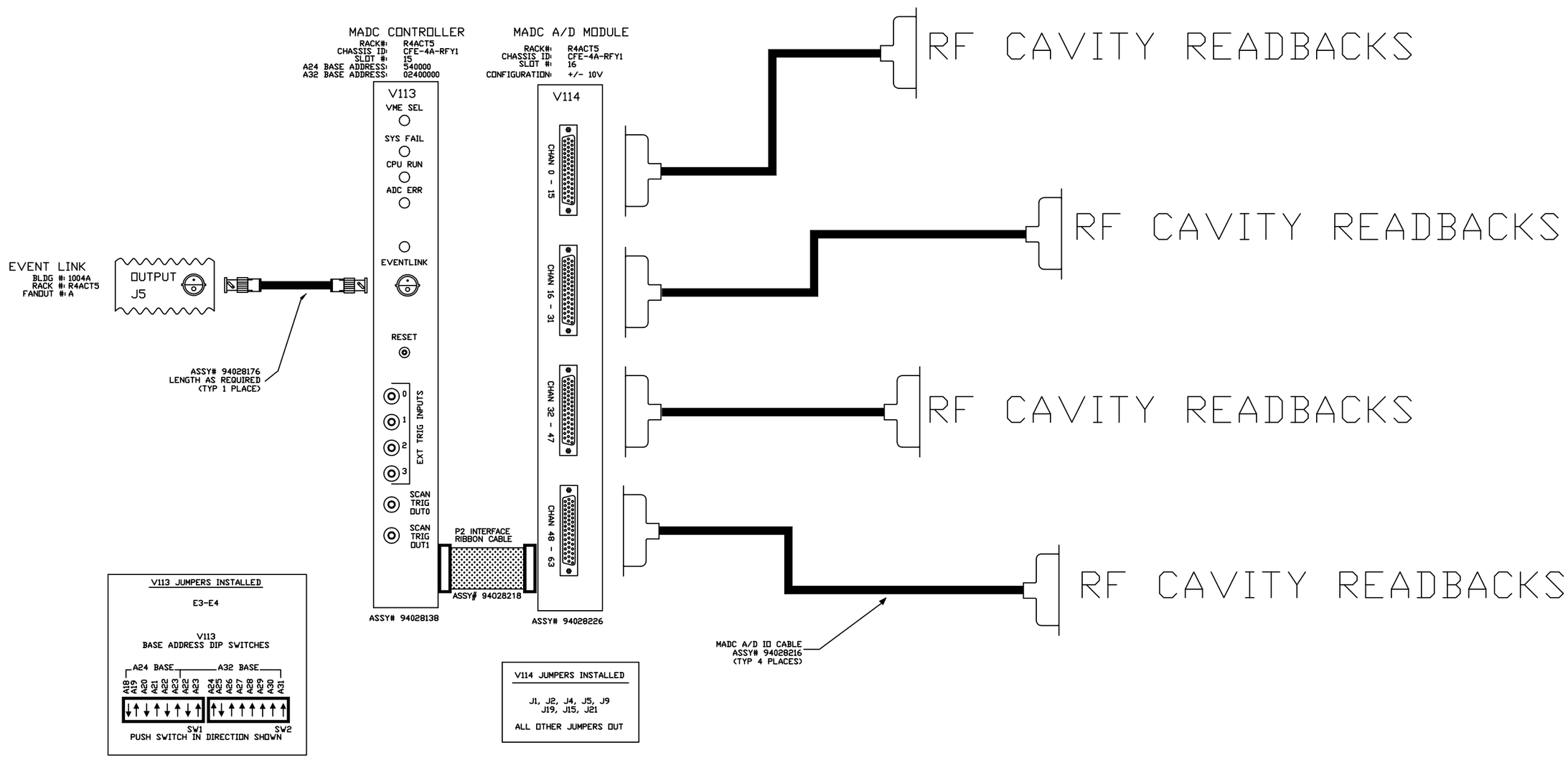

-3	-2	-1	REF DESIGNATOR	ITEM NO.	DESCRIPTION	MAT'L DWG NO.,BNL NO.
QTY REQD						

INTERPRET IN GENERAL ACCORDANCE WITH ASME Y14.24M-1989

UNLESS OTHERWISE SPECIFIED DIMENSIONS ARE IN INCHES

DECIMAL TOLERANCES
.X ±.030
.XX ±.015
.XXX ±.005
ANGULAR TOLERANCE
± .5°

FINISH: NA

BREAK SHARP EDGES
MAX. XX MIN. XX

OUTSTANDING ECN

Q.A. CATEGORY A-3	DATE	
DRAWN BY Ed Koropsak	9/9/98	
CHECKED BY		
DESIGN APPROVAL		
ENGINEER APPROVAL R. MICHNOFF	9/9/98	
SUPVR. APPROVAL		

NEXT ASSEMBLY

BROOKHAVEN NATIONAL LABORATORY
UPTON, N.Y. 11973

RHIC CONTROLS WIRING DIAGRAM

BLDG. 1004A, VME CHASSIS CFE-4A-RFY1

MADC SYSTEM

SIZE D | DRAWING NUMBER 94028745 | REV. A

MATERIAL: ——— SCALE: NA WEIGHT: – SHEET 21 OF X

*AUTOCAD

BNL, BNL 5/10/00 11:45 AM 8745_21A.dwg

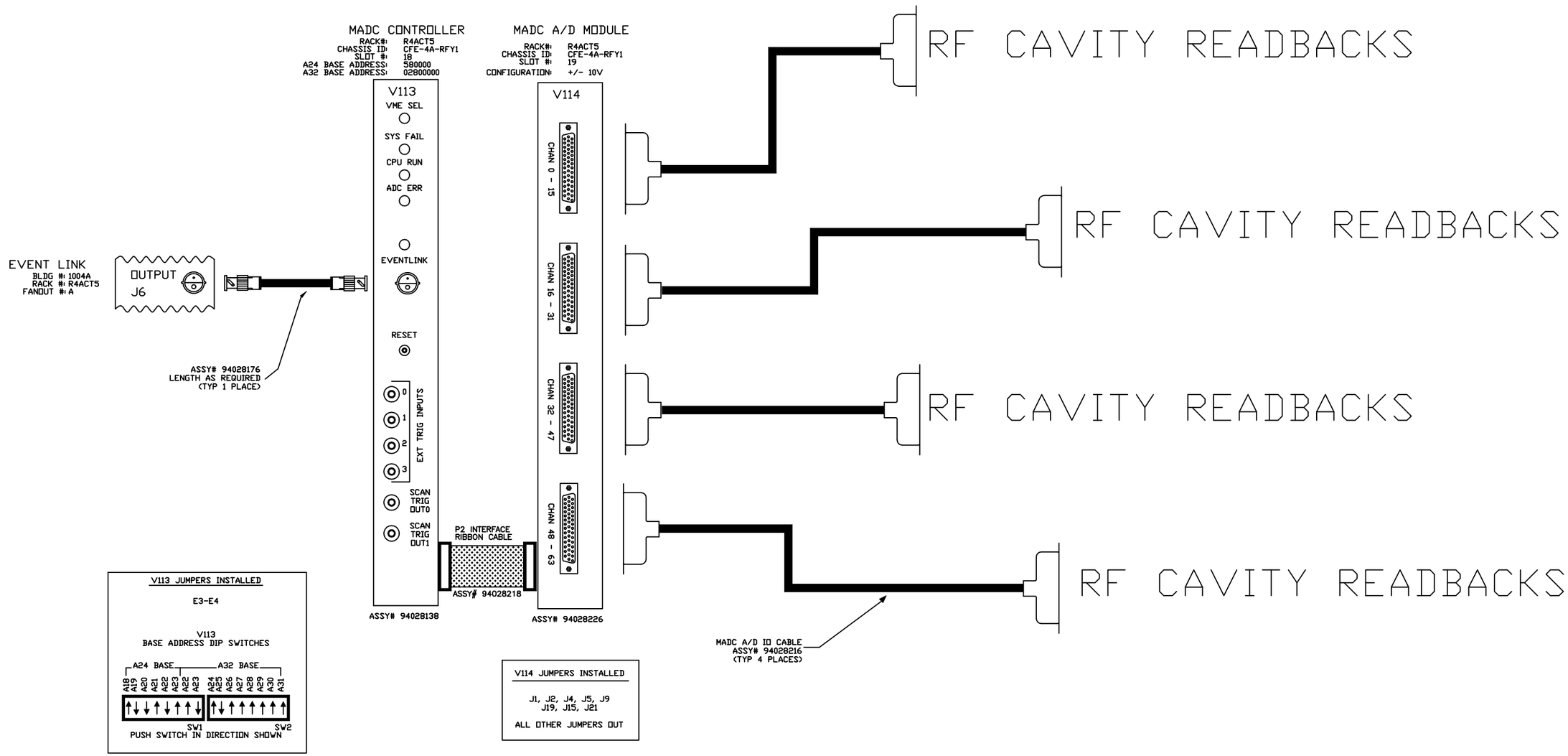

REV.	ZONE	ECN NO.	DATE	BY	CKR	APP.

-3	-2	-1	REF DESIGNATOR	ITEM NO.	DESCRIPTION	MAT'L DWG NO.,BNL NO.
QTY REQD						

INTERPRET IN GENERAL ACCORDANCE WITH ASME Y14.24M-1989

UNLESS OTHERWISE SPECIFIED DIMENSIONS ARE IN INCHES

DECIMAL TOLERANCES
.X ±.030
.XX ±.015
.XXX ±.005
ANGULAR TOLERANCE
± .5°

FINISH NA

BREAK SHARP EDGES
MAX. XX MIN. XX

OUTSTANDING ECN

Q.A. CATEGORY A-3	DATE	
DRAWN BY Ed Koropsak	5/10/00	
CHECKED BY		
DESIGN APPROVAL		
ENGINEER APPROVAL R. MICHNOFF	5/10/00	
SUPVR. APPROVAL		
NEXT ASSEMBLY		

BROOKHAVEN NATIONAL LABORATORY
UPTON, N.Y. 11973

RHIC CONTROLS WIRING DIAGRAM

BLDG. 1004A, VME CHASSIS CFE-4A-RFY1

MADC SYSTEM

SIZE D — DRAWING NUMBER 94028745 — REV. A

MATERIAL: ——— SCALE: NA WEIGHT: – SHEET 21A

*AUTOCAD

REV.	ZONE	ECN NO.	DATE	BY	CKR	APP.

BNL, BNL 5/23/00 2:26 PM 8745_22.dwg

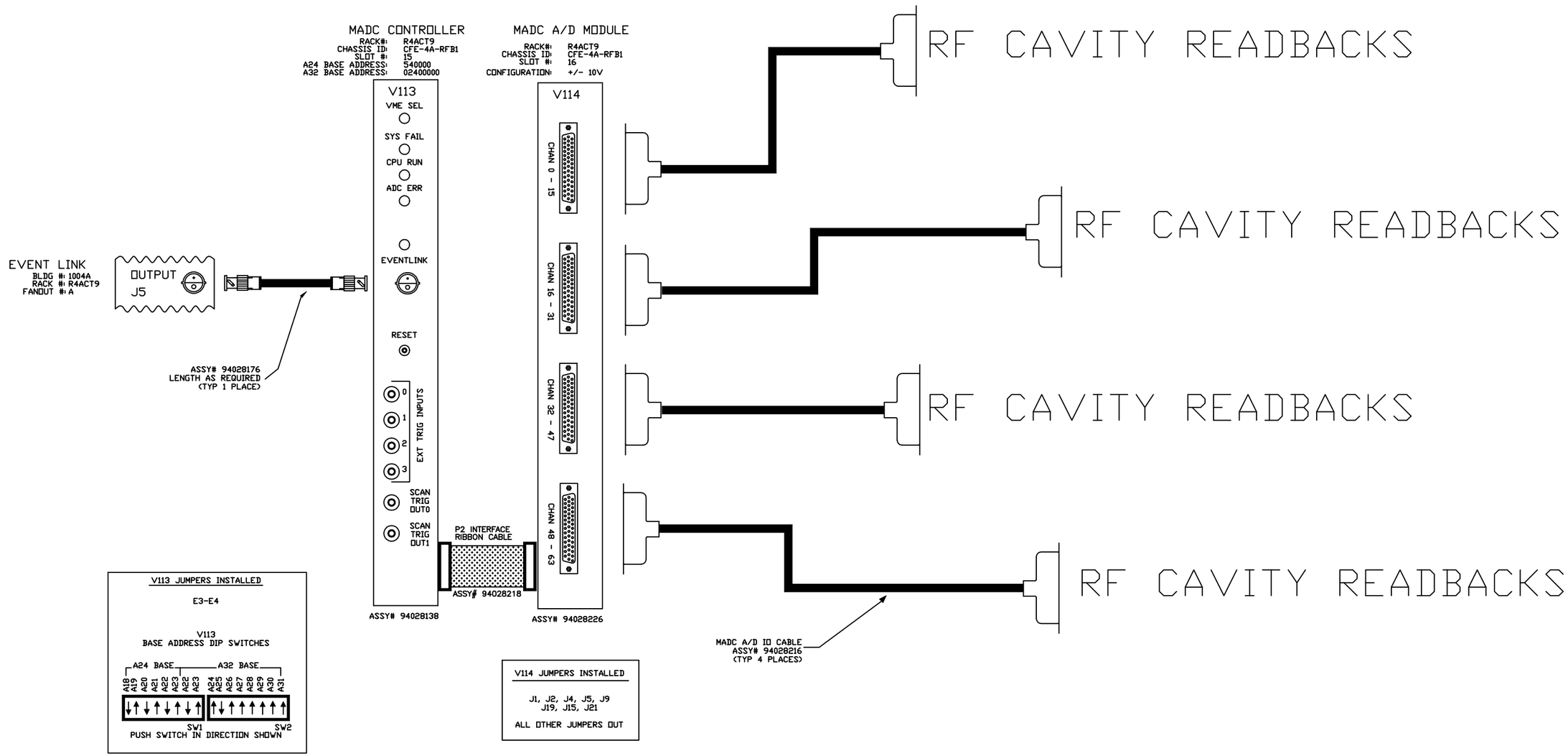

-3	-2	-1	REF DESIGNATOR	ITEM NO.	DESCRIPTION	MAT'L DWG NO.,BNL NO.
QTY REQD						

INTERPRET IN GENERAL ACCORDANCE WITH ASME Y14.24M-1989

UNLESS OTHERWISE SPECIFIED DIMENSIONS ARE IN INCHES

DECIMAL TOLERANCES
.X ±.030
.XX ±.015
.XXX ±.005
ANGULAR TOLERANCE
± .5°

NA FINISH

BREAK SHARP EDGES
MAX. XX MIN. XX

OUTSTANDING ECN

Q.A. CATEGORY A-3		DATE
DRAWN BY	Ed Koropsak	9/9/98
CHECKED BY		
DESIGN APPROVAL		
ENGINEER APPROVAL	R. MICHNOFF	9/9/98
SUPVR. APPROVAL		
NEXT ASSEMBLY		

BROOKHAVEN NATIONAL LABORATORY
UPTON, N.Y. 11973

RHIC CONTROLS WIRING DIAGRAM

BLDG. 1004A, VME CHASSIS CFE-4A-RFB1

MADC SYSTEM

SIZE D — DRAWING NUMBER 94028745 — REV. A

MATERIAL: ——— SCALE: NA WEIGHT: – SHEET 22

*AUTOCAD

BNL, BNL 5/23/00 2:25 PM 8745_22A.dwg

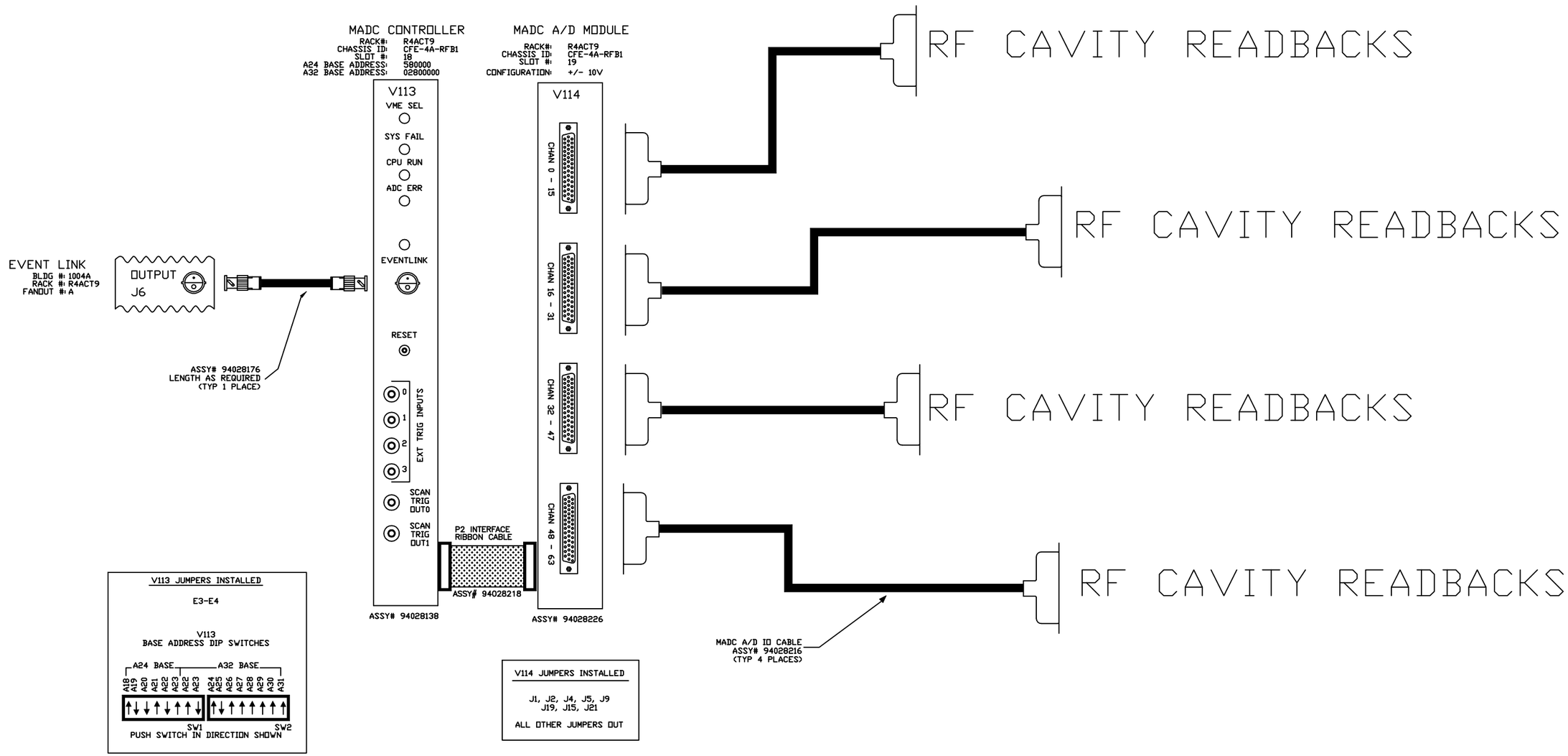

REV.	ZONE	ECN NO.	DATE	BY	CKR	APP.

-3	-2	-1	REF DESIGNATOR	ITEM NO.	DESCRIPTION	MAT'L DWG NO.,BNL NO.
QTY REQD						

INTERPRET IN GENERAL ACCORDANCE WITH ASME Y14.24M-1989

UNLESS OTHERWISE SPECIFIED DIMENSIONS ARE IN INCHES

DECIMAL TOLERANCES
.X ±.030
.XX ±.015
.XXX ±.005
ANGULAR TOLERANCE
± .5°

NA FINISH

BREAK SHARP EDGES
MAX. XX MIN. XX

OUTSTANDING ECN

Q.A. CATEGORY A-3	DATE	
DRAWN BY	Ed Koropsak	5/10/00
CHECKED BY		
DESIGN APPROVAL		
ENGINEER APPROVAL	R. MICHNOFF	5/10/00
SUPVR. APPROVAL		

NEXT ASSEMBLY

BROOKHAVEN NATIONAL LABORATORY
UPTON, N.Y. 11973

RHIC CONTROLS WIRING DIAGRAM

BLDG. 1004A, VME CHASSIS CFE-4A-RFY1

MADC SYSTEM

SIZE D | DRAWING NUMBER 94028745 | REV. A

MATERIAL: ——— SCALE: NA WEIGHT: – SHEET 22A

*AUTOCAD

REV.	ZONE	ECN NO.	DATE	BY	CKR	APP.

ACS, BNL 9/12/00 11:10 AM 8745_23.dwg

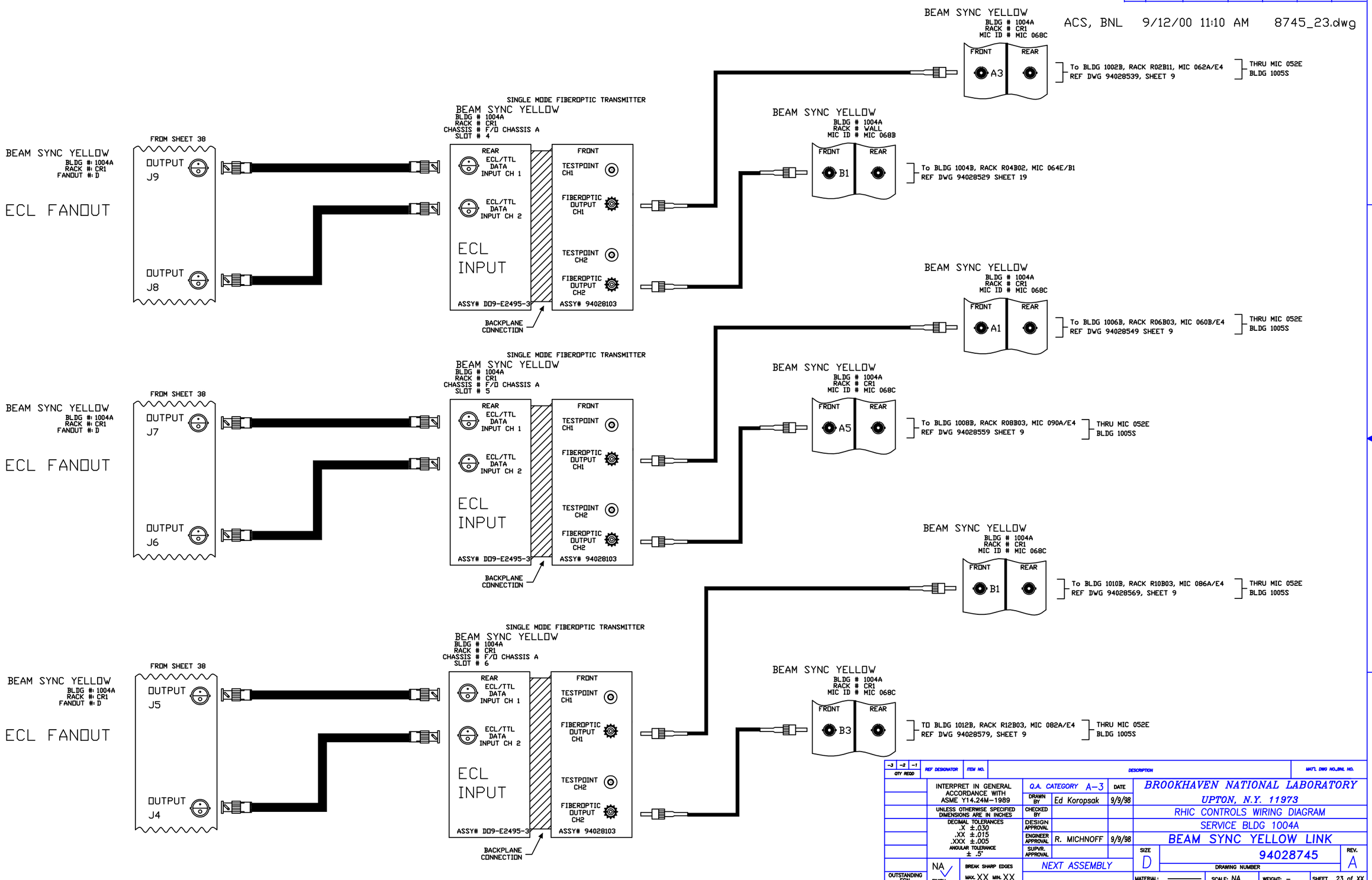

-3	-2	-1	REF DESIGNATOR	ITEM NO.	DESCRIPTION	MAT'L. DWG NO.,BNL NO.
QTY REQD						

INTERPRET IN GENERAL ACCORDANCE WITH ASME Y14.24M-1989

UNLESS OTHERWISE SPECIFIED DIMENSIONS ARE IN INCHES

DECIMAL TOLERANCES
.X ±.030
.XX ±.015
.XXX ±.005
ANGULAR TOLERANCE ± .5°

NA FINISH

BREAK SHARP EDGES MAX. XX MIN. XX

OUTSTANDING ECN

Q.A. CATEGORY A-3		DATE
DRAWN BY	Ed Koropsak	9/9/98
CHECKED BY		
DESIGN APPROVAL		
ENGINEER APPROVAL	R. MICHNOFF	9/9/98
SUPVR. APPROVAL		

NEXT ASSEMBLY

BROOKHAVEN NATIONAL LABORATORY
UPTON, N.Y. 11973

RHIC CONTROLS WIRING DIAGRAM
SERVICE BLDG 1004A
BEAM SYNC YELLOW LINK

SIZE D — DRAWING NUMBER 94028745 — REV. A

MATERIAL: ——— SCALE: NA WEIGHT: – SHEET 23 of XX

1 *AUTOCAD

REV.	ZONE	ECN NO.	DATE	BY	CKR	APP.

ACS, BNL 9/12/00 11:14 AM 8745_24.dwg

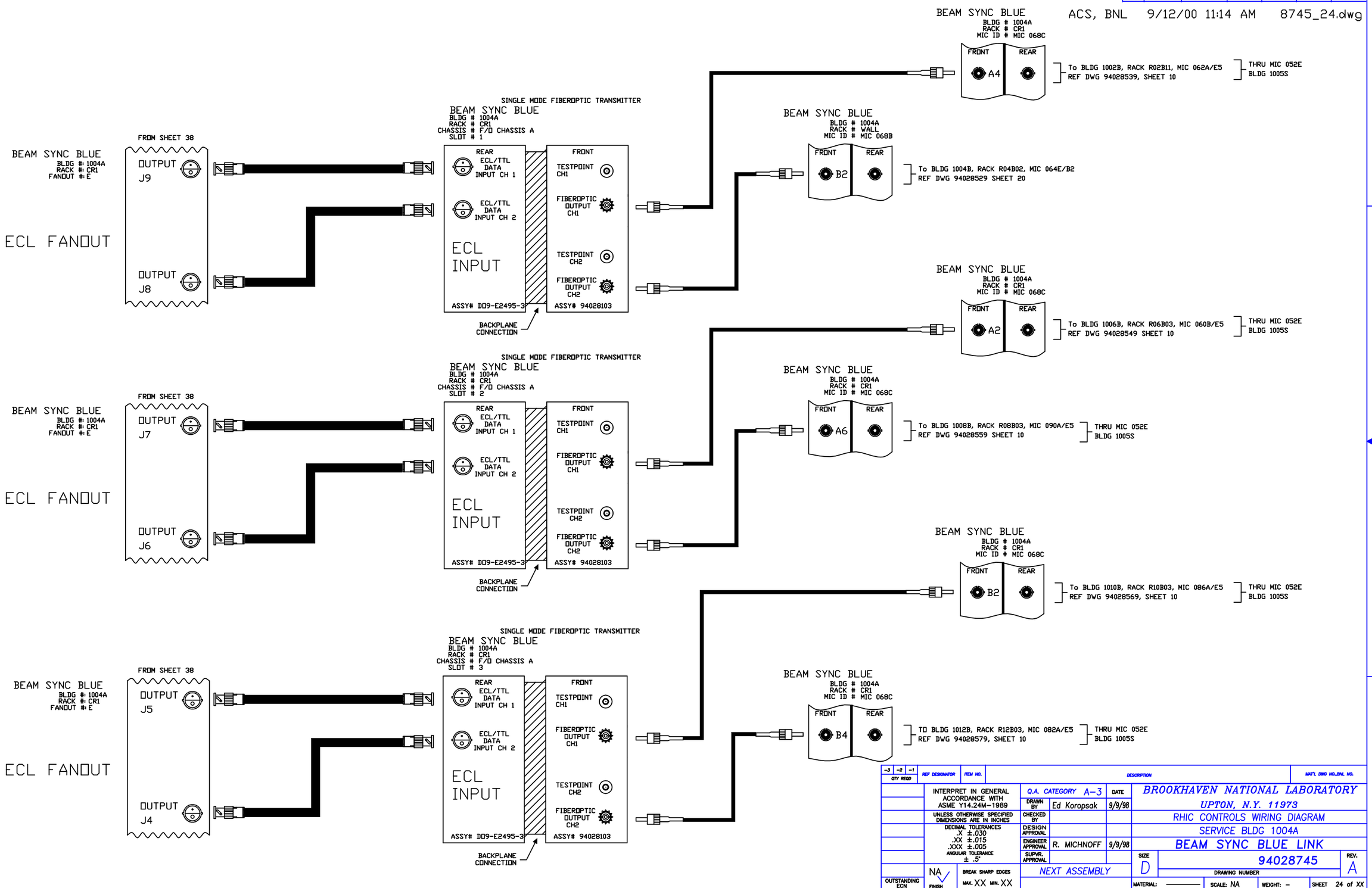

-3	-2	-1	REF DESIGNATOR	ITEM NO.	DESCRIPTION	MAT'L. DWG NO.,BNL NO.
QTY REQD						

INTERPRET IN GENERAL ACCORDANCE WITH ASME Y14.24M-1989

UNLESS OTHERWISE SPECIFIED DIMENSIONS ARE IN INCHES

DECIMAL TOLERANCES
.X ±.030
.XX ±.015
.XXX ±.005
ANGULAR TOLERANCE ± .5°

NA FINISH

BREAK SHARP EDGES MAX. XX MIN. XX

OUTSTANDING ECN

Q.A. CATEGORY A-3		DATE
DRAWN BY	Ed Koropsak	9/9/98
CHECKED BY		
DESIGN APPROVAL		
ENGINEER APPROVAL	R. MICHNOFF	9/9/98
SUPVR. APPROVAL		

NEXT ASSEMBLY

BROOKHAVEN NATIONAL LABORATORY
UPTON, N.Y. 11973

RHIC CONTROLS WIRING DIAGRAM
SERVICE BLDG 1004A
BEAM SYNC BLUE LINK

SIZE D — DRAWING NUMBER 94028745 — REV. A

MATERIAL: ——— SCALE: NA WEIGHT: – SHEET 24 of XX

1 *AUTOCAD

REV.	ZONE	ECN NO.	DATE	BY	CKR	APP.

ACS, BNL 9/13/00 2:28 PM 8745_25.dwg

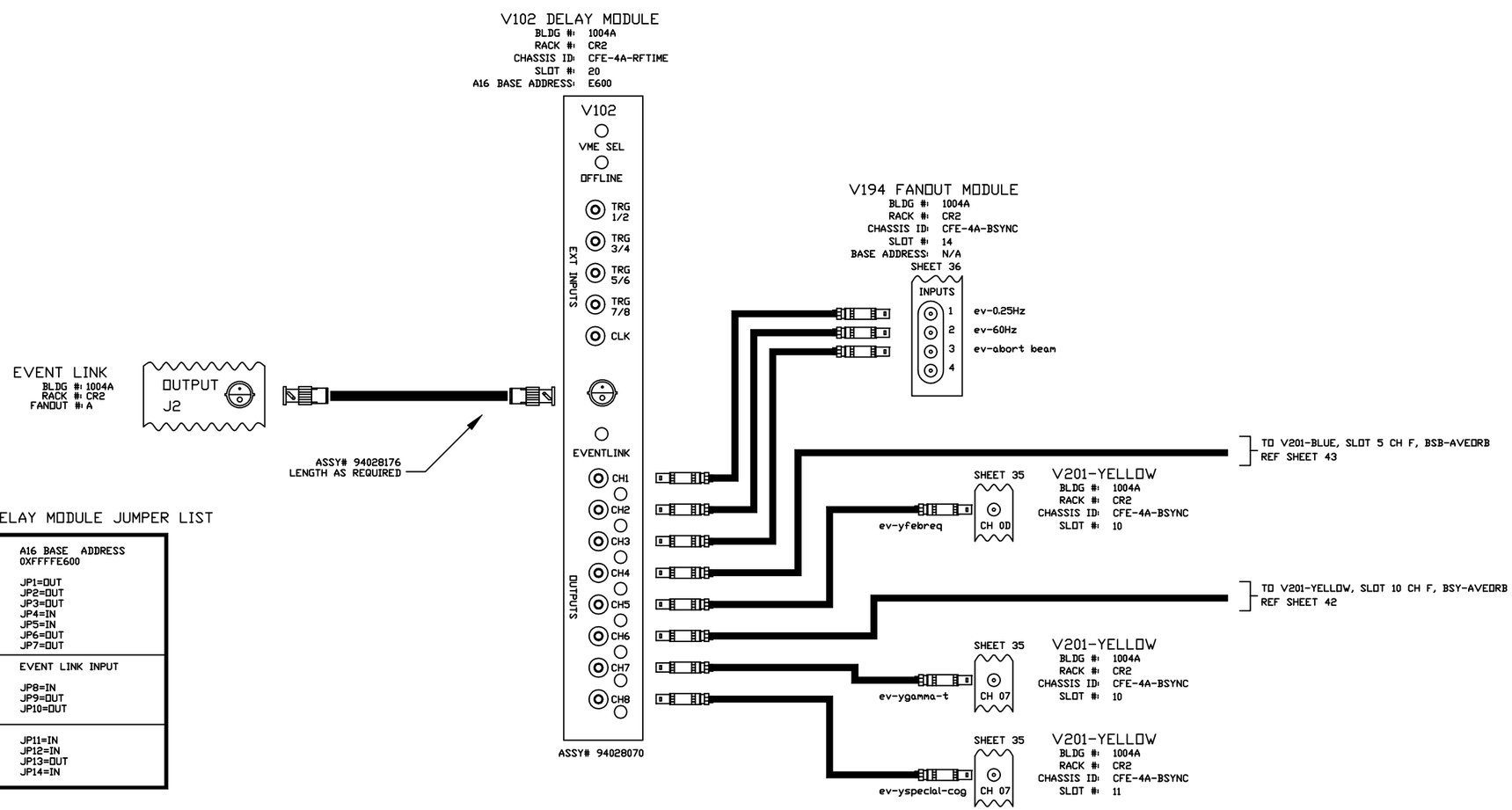

V102 DELAY MODULE JUMPER LIST

A16 BASE ADDRESS 0XFFFFE600 JP1=OUT JP2=OUT JP3=OUT JP4=IN JP5=IN JP6=OUT JP7=OUT
EVENT LINK INPUT JP8=IN JP9=OUT JP10=OUT
JP11=IN JP12=IN JP13=OUT JP14=IN

-3	-2	-1	REF DESIGNATOR	ITEM NO.	DESCRIPTION	MAT'L DWG NO./BNL NO.
QTY REQD						

INTERPRET IN GENERAL ACCORDANCE WITH ASME Y14.24M-1989

UNLESS OTHERWISE SPECIFIED DIMENSIONS ARE IN INCHES

DECIMAL TOLERANCES
.X ±.030
.XX ±.015
.XXX ±.005
ANGULAR TOLERANCE
± .5°

FINISH NA

BREAK SHARP EDGES
MAX. XX MIN. XX

OUTSTANDING ECN

Q.A. CATEGORY A-3		DATE
DRAWN BY	Ed Koropsak	9/10/98
CHECKED BY		
DESIGN APPROVAL		
ENGINEER APPROVAL	R. MICHNOFF	9/10/98
SUPVR. APPROVAL		

NEXT ASSEMBLY

BROOKHAVEN NATIONAL LABORATORY
UPTON, N.Y. 11973

RHIC CONTROLS WIRING DIAGRAM

BLDG. 1004A CHASSIS CFE-4A-RFTIME

V102 DELAY MODULE

SIZE D | DRAWING NUMBER 94028745 | REV. A

MATERIAL: ——— SCALE: NA WEIGHT: – SHEET 25 OF 52

*AUTOCAD

REV.	ZONE	ECN NO.	DATE	BY	CKR	APP.

CONTROLS- 12/31/01 1:39 PM 8745_25A.dwg

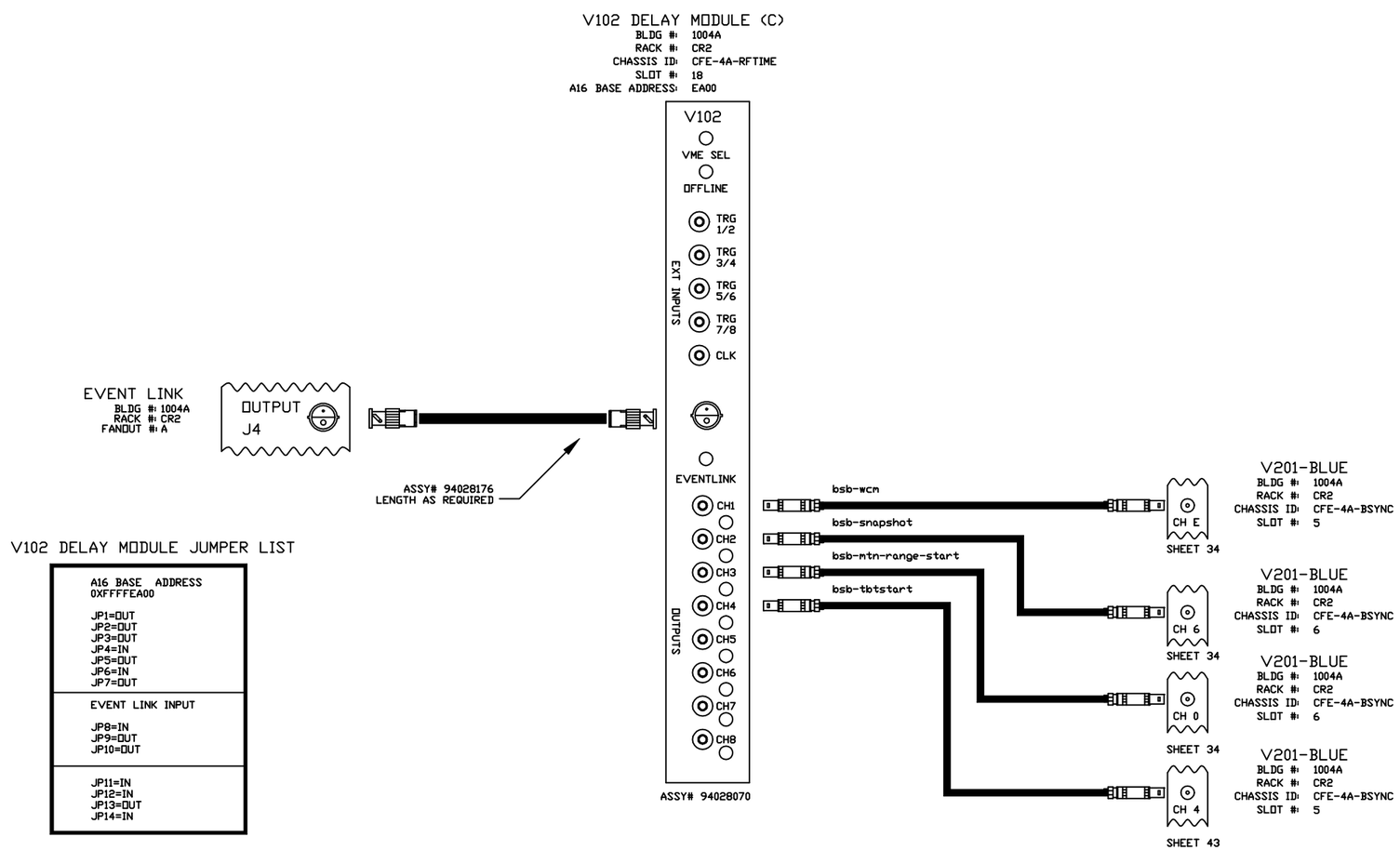

V102 DELAY MODULE JUMPER LIST

A16 BASE ADDRESS 0XFFFFEA00 JP1=OUT JP2=OUT JP3=OUT JP4=IN JP5=OUT JP6=IN JP7=OUT
EVENT LINK INPUT JP8=IN JP9=OUT JP10=OUT
JP11=IN JP12=IN JP13=OUT JP14=IN

-3	-2	-1	REF DESIGNATOR	ITEM NO.	DESCRIPTION	MAT'L DWG NO./BNL NO.
QTY REQD						

INTERPRET IN GENERAL ACCORDANCE WITH ASME Y14.24M-1989

UNLESS OTHERWISE SPECIFIED DIMENSIONS ARE IN INCHES

DECIMAL TOLERANCES
.X ±.030
.XX ±.015
.XXX ±.005
ANGULAR TOLERANCE
± .5°

FINISH: NA

BREAK SHARP EDGES
MAX. XX MIN. XX

OUTSTANDING ECN

Q.A. CATEGORY A-3		DATE
DRAWN BY	Ed Koropsak	9/10/98
CHECKED BY		
DESIGN APPROVAL		
ENGINEER APPROVAL	R. MICHNOFF	9/10/98
SUPVR. APPROVAL		

NEXT ASSEMBLY

BROOKHAVEN NATIONAL LABORATORY
UPTON, N.Y. 11973

RHIC CONTROLS WIRING DIAGRAM

BLDG. 1004A CHASSIS CFE-4A-RFTIME

V102 DELAY MODULE

SIZE D | DRAWING NUMBER 94028745 | REV. A

MATERIAL: ——— SCALE: NA WEIGHT: – SHEET 25A

*AUTOCAD

REV.	ZONE	ECN NO.	DATE	BY	CKR	APP.

CONTROLS- 12/31/01 1:40 PM 8745_26.dwg

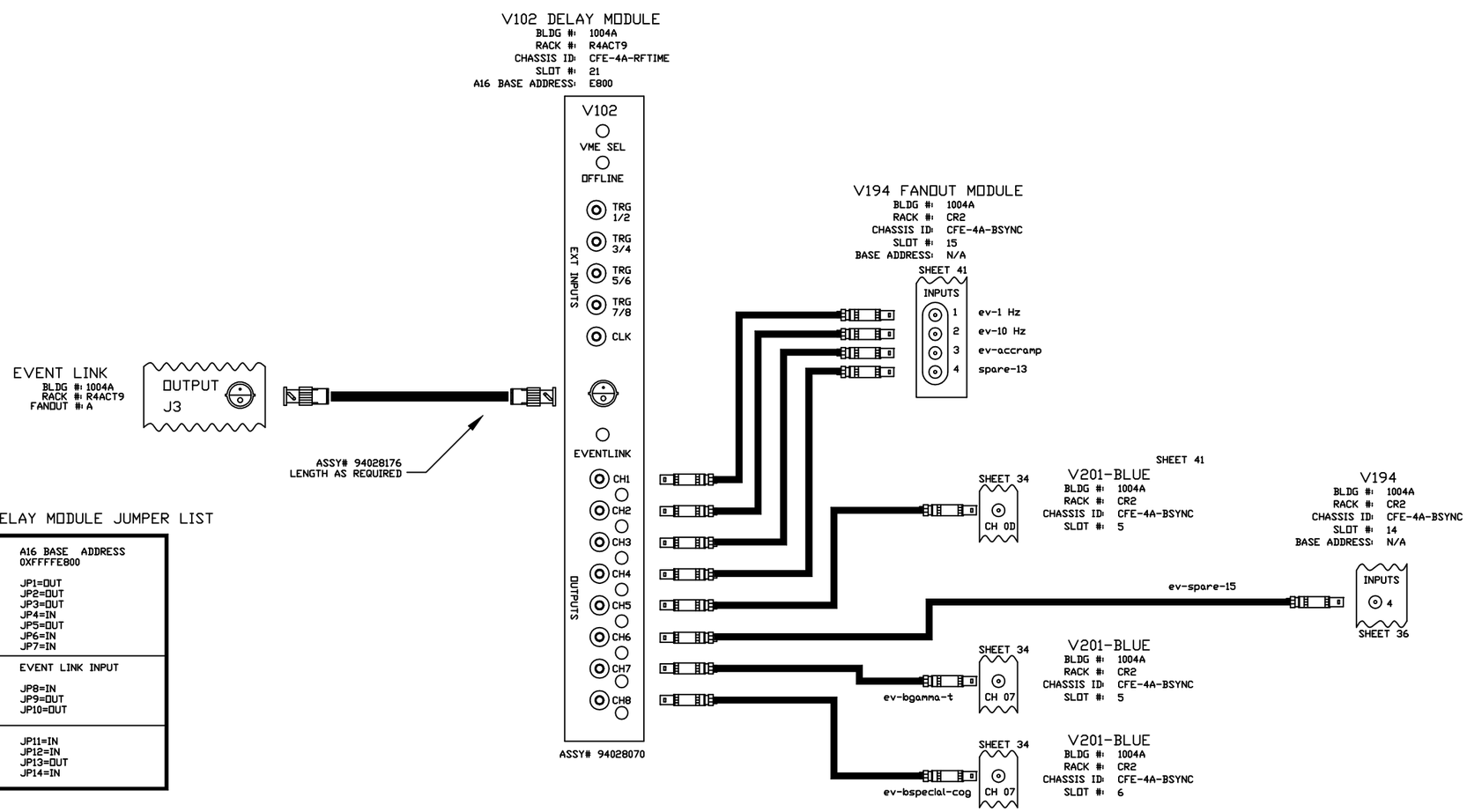

V102 DELAY MODULE JUMPER LIST

A16 BASE ADDRESS 0XFFFFE800 JP1=OUT JP2=OUT JP3=OUT JP4=IN JP5=OUT JP6=IN JP7=IN
EVENT LINK INPUT JP8=IN JP9=OUT JP10=OUT
JP11=IN JP12=IN JP13=OUT JP14=IN

-3	-2	-1	REF DESIGNATOR	ITEM NO.	DESCRIPTION	MAT'L DWG NO./BNL NO.
QTY REQD						

INTERPRET IN GENERAL ACCORDANCE WITH ASME Y14.24M-1989	Q.A. CATEGORY A-3	DATE	BROOKHAVEN NATIONAL LABORATORY UPTON, N.Y. 11973
UNLESS OTHERWISE SPECIFIED DIMENSIONS ARE IN INCHES	DRAWN BY Ed Koropsak	9/10/98	RHIC CONTROLS WIRING DIAGRAM
DECIMAL TOLERANCES .X ±.030 .XX ±.015 .XXX ±.005 ANGULAR TOLERANCE ± .5°	CHECKED BY		BLDG. 1004A CHASSIS CFE-4A-RFTIME
	DESIGN APPROVAL		V102 DELAY MODULE
	ENGINEER APPROVAL R. MICHNOFF	9/10/98	
	SUPVR. APPROVAL		SIZE D — 94028745 — REV. A
NA FINISH — BREAK SHARP EDGES MAX. XX MIN. XX	NEXT ASSEMBLY		DRAWING NUMBER
OUTSTANDING ECN			MATERIAL: —— SCALE: NA WEIGHT: – SHEET 26 OF 52

*AUTOCAD

REV.	ZONE	ECN NO.	DATE	BY	CKR	APP.

CONTROLS- 12/31/01 1:44 PM 8745_26A.dwg

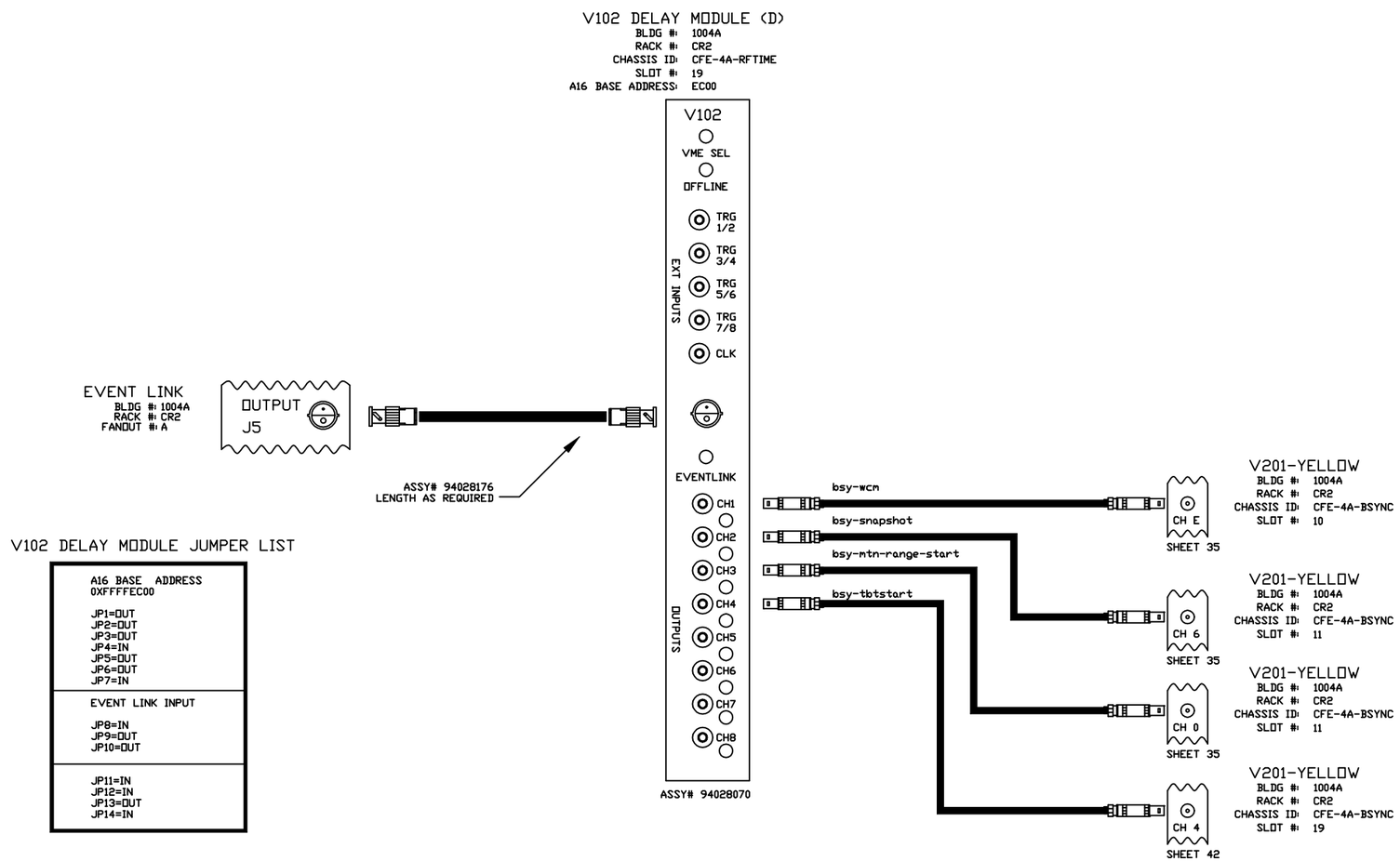

V102 DELAY MODULE JUMPER LIST

A16 BASE ADDRESS 0XFFFFEC00 JP1=OUT JP2=OUT JP3=OUT JP4=IN JP5=OUT JP6=OUT JP7=IN
EVENT LINK INPUT JP8=IN JP9=OUT JP10=OUT
JP11=IN JP12=IN JP13=OUT JP14=IN

-3	-2	-1	REF DESIGNATOR	ITEM NO.	DESCRIPTION	MAT'L DWG NO./BNL NO.
QTY REQD						

INTERPRET IN GENERAL ACCORDANCE WITH ASME Y14.24M-1989	Q.A. CATEGORY A-3	DATE	BROOKHAVEN NATIONAL LABORATORY UPTON, N.Y. 11973
UNLESS OTHERWISE SPECIFIED DIMENSIONS ARE IN INCHES	DRAWN BY Ed Koropsak	9/10/98	RHIC CONTROLS WIRING DIAGRAM
DECIMAL TOLERANCES .X ±.030 .XX ±.015 .XXX ±.005 ANGULAR TOLERANCE ± .5°	CHECKED BY		BLDG. 1004A CHASSIS CFE-4A-RFTIME
	DESIGN APPROVAL		V102 DELAY MODULE
	ENGINEER APPROVAL R. MICHNOFF	9/10/98	SIZE D / 94028745 / REV. A
NA FINISH	BREAK SHARP EDGES MAX. XX MIN. XX	NEXT ASSEMBLY	DRAWING NUMBER
OUTSTANDING ECN			MATERIAL: ——— SCALE: NA WEIGHT: – SHEET 26A

1 *AUTOCAD

REV.	ZONE	ECN NO.	DATE	BY	CKR	APP.

ACS, BNL 8/24/99 2:41 PM 8745_27.dwg

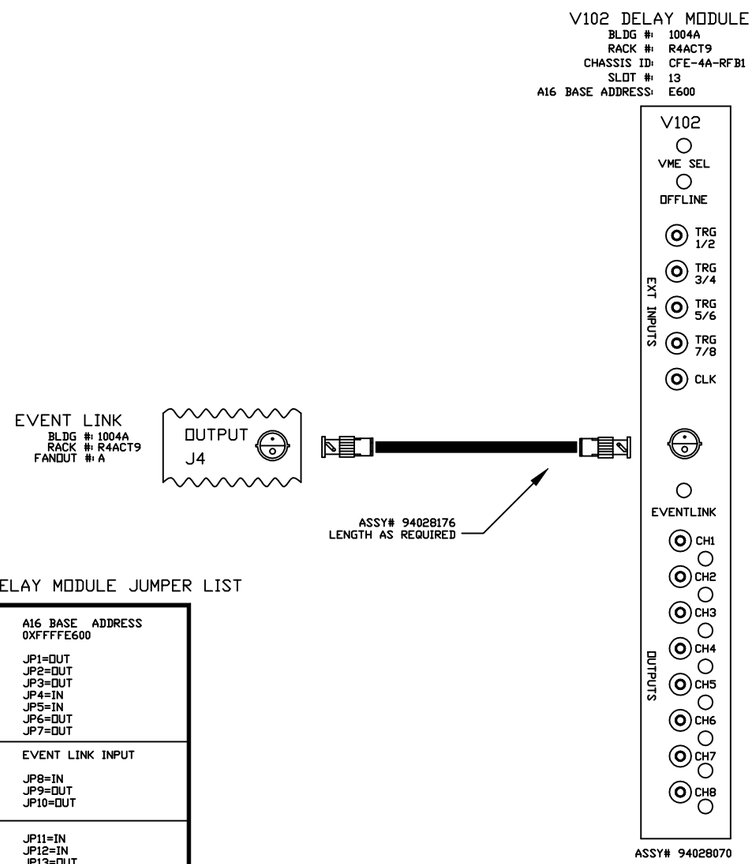

V102 DELAY MODULE JUMPER LIST

A16 BASE ADDRESS 0XFFFFE600 JP1=OUT JP2=OUT JP3=OUT JP4=IN JP5=IN JP6=OUT JP7=OUT
EVENT LINK INPUT JP8=IN JP9=OUT JP10=OUT
JP11=IN JP12=IN JP13=OUT JP14=IN

-3	-2	-1	REF DESIGNATOR	ITEM NO.	DESCRIPTION	MAT'L DWG NO./BNL NO.
QTY REQD						

INTERPRET IN GENERAL ACCORDANCE WITH ASME Y14.24M-1989

UNLESS OTHERWISE SPECIFIED DIMENSIONS ARE IN INCHES

DECIMAL TOLERANCES
.X ±.030
.XX ±.015
.XXX ±.005
ANGULAR TOLERANCE
± .5°

NA FINISH

BREAK SHARP EDGES
MAX. XX MIN. XX

OUTSTANDING ECN

Q.A. CATEGORY A-3		DATE
DRAWN BY	Ed Koropsak	9/10/98
CHECKED BY		
DESIGN APPROVAL		
ENGINEER APPROVAL	R. MICHNOFF	9/10/98
SUPVR. APPROVAL		

NEXT ASSEMBLY

BROOKHAVEN NATIONAL LABORATORY
UPTON, N.Y. 11973

RHIC CONTROLS WIRING DIAGRAM

BLDG. 1004A CHASSIS CFE-4A-RFB1

V102 DELAY MODULE

SIZE D | DRAWING NUMBER 94028745 | REV. A

MATERIAL: ——— SCALE: NA WEIGHT: – SHEET 27 OF 52

*AUTOCAD

REV.	ZONE	ECN NO.	DATE	BY	CKR	APP.

ACS, BNL 8/24/99 2:43 PM 8745_28.dwg

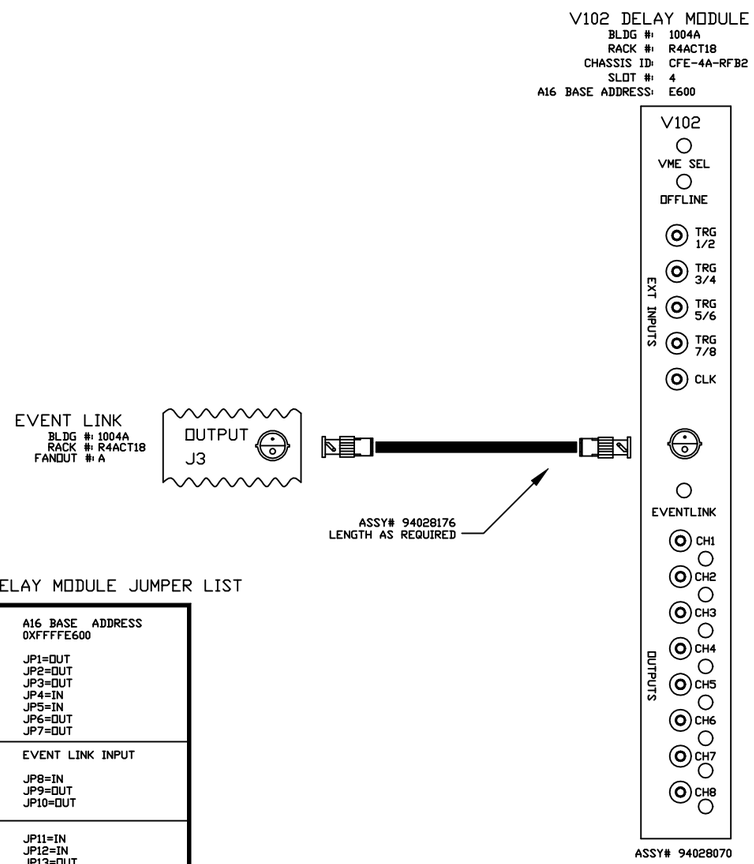

V102 DELAY MODULE JUMPER LIST

A16 BASE ADDRESS 0XFFFFE600 JP1=OUT JP2=OUT JP3=OUT JP4=IN JP5=IN JP6=OUT JP7=OUT
EVENT LINK INPUT JP8=IN JP9=OUT JP10=OUT
JP11=IN JP12=IN JP13=OUT JP14=IN

-3	-2	-1	REF DESIGNATOR	ITEM NO.	DESCRIPTION	MAT'L DWG NO.,BNL NO.
QTY REQD						

INTERPRET IN GENERAL ACCORDANCE WITH ASME Y14.24M-1989

UNLESS OTHERWISE SPECIFIED DIMENSIONS ARE IN INCHES

DECIMAL TOLERANCES
.X ±.030
.XX ±.015
.XXX ±.005
ANGULAR TOLERANCE
± .5°

NA FINISH

BREAK SHARP EDGES
MAX. XX MIN. XX

OUTSTANDING ECN

Q.A. CATEGORY A-3		DATE
DRAWN BY	Ed Koropsak	9/10/98
CHECKED BY		
DESIGN APPROVAL		
ENGINEER APPROVAL	R. MICHNOFF	9/10/98
SUPVR. APPROVAL		

NEXT ASSEMBLY

BROOKHAVEN NATIONAL LABORATORY
UPTON, N.Y. 11973

RHIC CONTROLS WIRING DIAGRAM

BLDG. 1004A CHASSIS CFE-4A-RFB2

V102 DELAY MODULE

SIZE D | DRAWING NUMBER 94028745 | REV. A

MATERIAL: ——— SCALE: NA WEIGHT: – SHEET 28 OF 52

*AUTOCAD

REV.	ZONE	ECN NO.	DATE	BY	CKR	APP.

ACS, BNL 8/24/99 3:37 PM 8745_29.dwg

V102 DELAY MODULE
BLDG #: 1004A
RACK #: R4ACT18
CHASSIS ID: CFE-4A-RFB2
SLOT #: 5
A16 BASE ADDRESS: E800

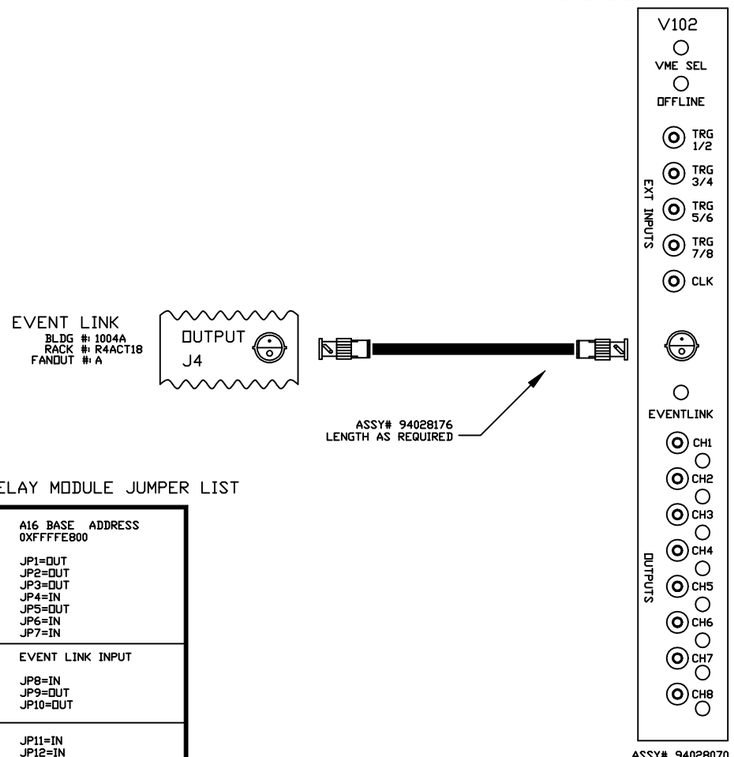

V102 DELAY MODULE JUMPER LIST

A16 BASE ADDRESS 0XFFFFE800 JP1=OUT JP2=OUT JP3=OUT JP4=IN JP5=OUT JP6=IN JP7=IN
EVENT LINK INPUT JP8=IN JP9=OUT JP10=OUT
JP11=IN JP12=IN JP13=OUT JP14=IN

-3	-2	-1	REF DESIGNATOR	ITEM NO.	DESCRIPTION	MAT'L DWG NO.,BNL NO.
QTY REQD						

INTERPRET IN GENERAL ACCORDANCE WITH ASME Y14.24M-1989

UNLESS OTHERWISE SPECIFIED DIMENSIONS ARE IN INCHES

DECIMAL TOLERANCES
.X ±.030
.XX ±.015
.XXX ±.005
ANGULAR TOLERANCE
± .5°

OUTSTANDING ECN

NA FINISH

BREAK SHARP EDGES
MAX. XX MIN. XX

Q.A. CATEGORY A-3		DATE
DRAWN BY	Ed Koropsak	9/10/98
CHECKED BY		
DESIGN APPROVAL		
ENGINEER APPROVAL	R. MICHNOFF	9/10/98
SUPVR. APPROVAL		

NEXT ASSEMBLY

BROOKHAVEN NATIONAL LABORATORY
UPTON, N.Y. 11973

RHIC CONTROLS WIRING DIAGRAM

BLDG. 1004A CHASSIS CFE-4A-RFB2

V102 DELAY MODULE

SIZE D | DRAWING NUMBER 94028745 | REV. A

MATERIAL: ——— SCALE: NA WEIGHT: – SHEET 29 OF 52

*AUTOCAD

REV.	ZONE	ECN NO.	DATE	BY	CKR	APP.

ACS, BNL 8/24/99 3:40 PM 8745_29A.dwg

V102 DELAY MODULE
BLDG #: 1004A
RACK #: R4ACT18
CHASSIS ID: CFE-4A-RFB2
SLOT #: 15
A16 BASE ADDRESS: EA00

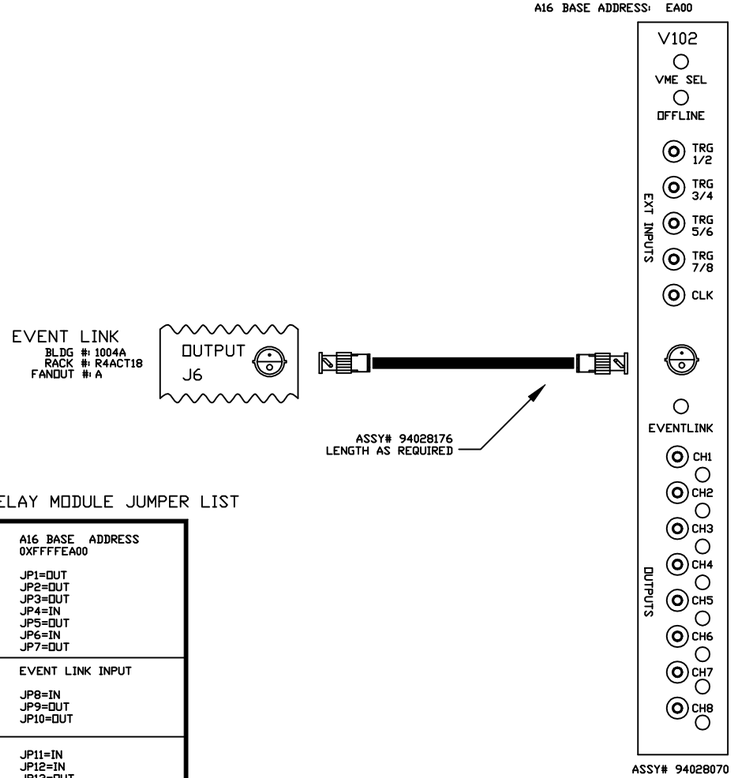

V102 DELAY MODULE JUMPER LIST

A16 BASE ADDRESS 0XFFFFEA00 JP1=OUT JP2=OUT JP3=OUT JP4=IN JP5=OUT JP6=IN JP7=OUT
EVENT LINK INPUT JP8=IN JP9=OUT JP10=OUT
JP11=IN JP12=IN JP13=OUT JP14=IN

-3	-2	-1	REF DESIGNATOR	ITEM NO.	DESCRIPTION	MAT'L DWG NO./BNL NO.
QTY REQD						

INTERPRET IN GENERAL ACCORDANCE WITH ASME Y14.24M-1989

UNLESS OTHERWISE SPECIFIED DIMENSIONS ARE IN INCHES

DECIMAL TOLERANCES
.X ±.030
.XX ±.015
.XXX ±.005
ANGULAR TOLERANCE
± .5°

NA FINISH

BREAK SHARP EDGES
MAX. XX MIN. XX

OUTSTANDING ECN

Q.A. CATEGORY A-3		DATE
DRAWN BY	Ed Koropsak	9/10/98
CHECKED BY		
DESIGN APPROVAL		
ENGINEER APPROVAL	R. MICHNOFF	9/10/98
SUPVR. APPROVAL		

NEXT ASSEMBLY

BROOKHAVEN NATIONAL LABORATORY
UPTON, N.Y. 11973

RHIC CONTROLS WIRING DIAGRAM

BLDG. 1004A CHASSIS CFE-4A-RFB2

V102 DELAY MODULE

SIZE D | DRAWING NUMBER 94028745 | REV. A

MATERIAL: ——— SCALE: NA WEIGHT: – SHEET 29A OF 52

*AUTOCAD

REV.	ZONE	ECN NO.	DATE	BY	CKR	APP.

ACS, BNL 8/24/99 3:42 PM 8745_30.dwg

V102 DELAY MODULE
BLDG #: 1004A
RACK #: R4ACT5
CHASSIS ID: CFE-4A-RFY1
SLOT #: 13
A16 BASE ADDRESS: E600

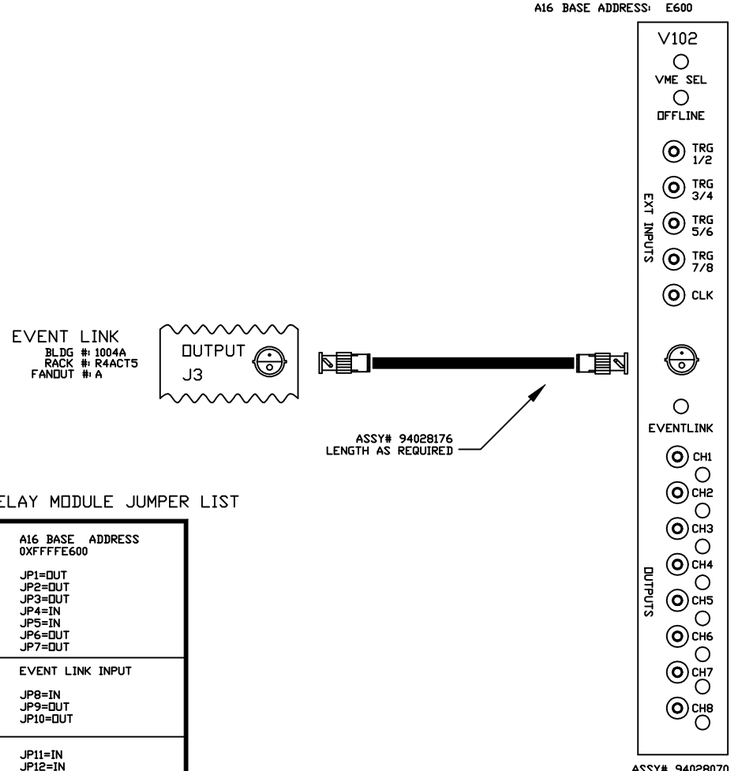

V102 DELAY MODULE JUMPER LIST

A16 BASE ADDRESS 0XFFFFE600 JP1=OUT JP2=OUT JP3=OUT JP4=IN JP5=IN JP6=OUT JP7=OUT
EVENT LINK INPUT JP8=IN JP9=OUT JP10=OUT
JP11=IN JP12=IN JP13=OUT JP14=IN

-3	-2	-1	REF DESIGNATOR	ITEM NO.	DESCRIPTION	MAT'L DWG NO./BNL NO.
QTY REQD						

INTERPRET IN GENERAL ACCORDANCE WITH ASME Y14.24M-1989

UNLESS OTHERWISE SPECIFIED DIMENSIONS ARE IN INCHES

DECIMAL TOLERANCES
.X ±.030
.XX ±.015
.XXX ±.005
ANGULAR TOLERANCE
± .5°

OUTSTANDING ECN

NA FINISH

BREAK SHARP EDGES
MAX. XX MIN. XX

Q.A. CATEGORY A-3		DATE
DRAWN BY	Ed Koropsak	9/10/98
CHECKED BY		
DESIGN APPROVAL		
ENGINEER APPROVAL	R. MICHNOFF	9/10/98
SUPVR. APPROVAL		

NEXT ASSEMBLY

BROOKHAVEN NATIONAL LABORATORY
UPTON, N.Y. 11973

RHIC CONTROLS WIRING DIAGRAM
BLDG. 1004A CHASSIS CFE-4A-RFY1
V102 DELAY MODULE

SIZE D
DRAWING NUMBER 94028745
REV. A

MATERIAL: ——— SCALE: NA WEIGHT: – SHEET 30 OF 52

*AUTOCAD

REV.	ZONE	ECN NO.	DATE	BY	CKR	APP.

ACS, BNL 8/24/99 3:44 PM 8745_31.dwg

V102 DELAY MODULE
BLDG #: 1004A
RACK #: R4ACT5
CHASSIS ID: CFE-4A-RFB1
SLOT #: 14
A16 BASE ADDRESS: E800

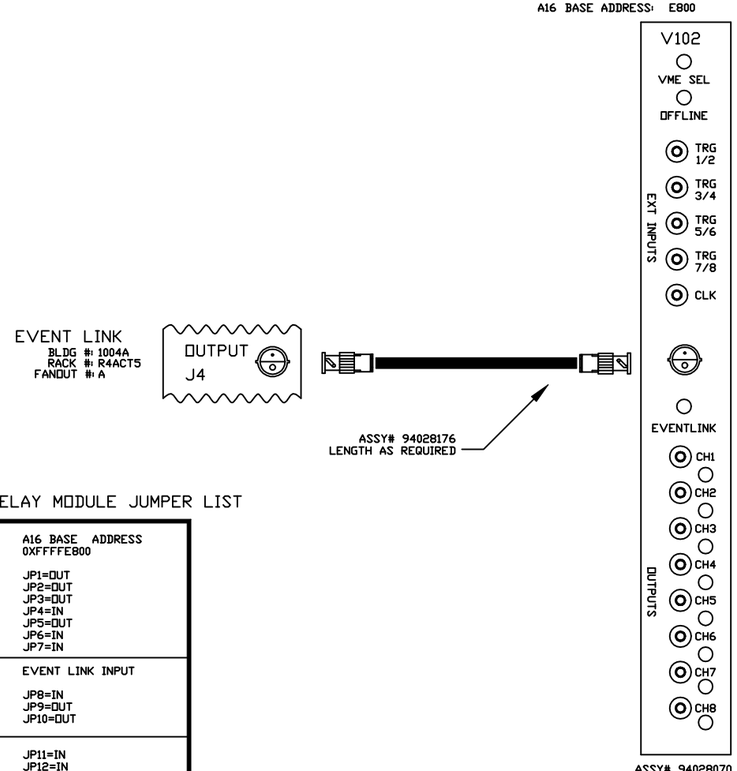

V102 DELAY MODULE JUMPER LIST

A16 BASE ADDRESS 0XFFFFE800 JP1=OUT JP2=OUT JP3=OUT JP4=IN JP5=OUT JP6=IN JP7=IN
EVENT LINK INPUT JP8=IN JP9=OUT JP10=OUT
JP11=IN JP12=IN JP13=OUT JP14=IN

-3	-2	-1	REF DESIGNATOR	ITEM NO.	DESCRIPTION	MAT'L DWG NO.,BNL NO.
QTY REQD						

INTERPRET IN GENERAL ACCORDANCE WITH ASME Y14.24M-1989

UNLESS OTHERWISE SPECIFIED DIMENSIONS ARE IN INCHES

DECIMAL TOLERANCES
.X ±.030
.XX ±.015
.XXX ±.005
ANGULAR TOLERANCE
± .5°

OUTSTANDING ECN

NA FINISH

BREAK SHARP EDGES
MAX. XX MIN. XX

Q.A. CATEGORY A-3		DATE
DRAWN BY	Ed Koropsak	9/10/98
CHECKED BY		
DESIGN APPROVAL		
ENGINEER APPROVAL	R. MICHNOFF	9/10/98
SUPVR. APPROVAL		

NEXT ASSEMBLY

BROOKHAVEN NATIONAL LABORATORY
UPTON, N.Y. 11973

RHIC CONTROLS WIRING DIAGRAM
BLDG. 1004A CHASSIS CFE-4A-RFY1
V102 DELAY MODULE

SIZE D
DRAWING NUMBER 94028745
REV. A

MATERIAL: ——— SCALE: NA WEIGHT: – SHEET 31 OF 52

*AUTOCAD

REV.	ZONE	ECN NO.	DATE	BY	CKR	APP.

ACS, BNL 8/24/99 3:45 PM 8745_32.dwg

V102 DELAY MODULE
BLDG #: 1004A
RACK #: R4ACT18
CHASSIS ID: CFE-4A-RFY2
SLOT #: 4
A16 BASE ADDRESS: E600

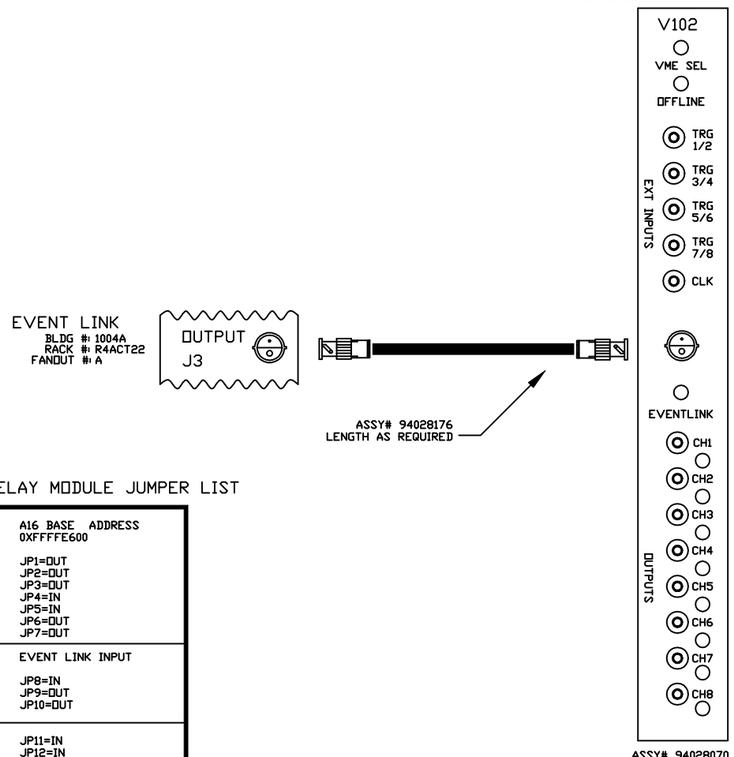

V102 DELAY MODULE JUMPER LIST

A16 BASE ADDRESS 0XFFFFE600 JP1=OUT JP2=OUT JP3=OUT JP4=IN JP5=IN JP6=OUT JP7=OUT
EVENT LINK INPUT JP8=IN JP9=OUT JP10=OUT
JP11=IN JP12=IN JP13=OUT JP14=IN

-3	-2	-1	REF DESIGNATOR	ITEM NO.	DESCRIPTION	MAT'L DWG NO.,BNL NO.
QTY REQD						

INTERPRET IN GENERAL ACCORDANCE WITH ASME Y14.24M-1989

UNLESS OTHERWISE SPECIFIED DIMENSIONS ARE IN INCHES

DECIMAL TOLERANCES
.X ±.030
.XX ±.015
.XXX ±.005
ANGULAR TOLERANCE
± .5°

OUTSTANDING ECN

NA FINISH

BREAK SHARP EDGES
MAX. XX MIN. XX

Q.A. CATEGORY A-3		DATE
DRAWN BY	Ed Koropsak	9/10/98
CHECKED BY		
DESIGN APPROVAL		
ENGINEER APPROVAL	R. MICHNOFF	9/10/98
SUPVR. APPROVAL		

NEXT ASSEMBLY

BROOKHAVEN NATIONAL LABORATORY
UPTON, N.Y. 11973

RHIC CONTROLS WIRING DIAGRAM

BLDG. 1004A CHASSIS CFE-4A-RFY2

V102 DELAY MODULE

SIZE D | DRAWING NUMBER 94028745 | REV. A

MATERIAL: ——— SCALE: NA WEIGHT: – SHEET 32 OF 52

*AUTOCAD

REV.	ZONE	ECN NO.	DATE	BY	CKR	APP.

ACS, BNL 8/24/99 3:47 PM 8745_33.dwg

V102 DELAY MODULE
BLDG #: 1004A
RACK #: R4ACT18
CHASSIS ID: CFE-4A-RFY2
SLOT #: 5
A16 BASE ADDRESS: E800

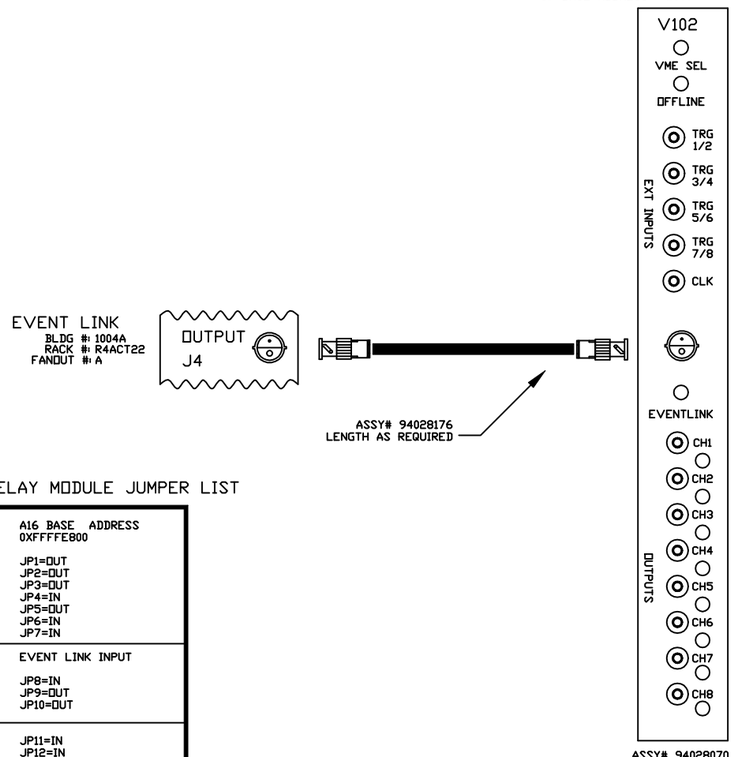

V102 DELAY MODULE JUMPER LIST

A16 BASE ADDRESS 0XFFFFE800 JP1=OUT JP2=OUT JP3=OUT JP4=IN JP5=OUT JP6=IN JP7=IN
EVENT LINK INPUT JP8=IN JP9=OUT JP10=OUT
JP11=IN JP12=IN JP13=OUT JP14=IN

-3	-2	-1	REF DESIGNATOR	ITEM NO.	DESCRIPTION	MAT'L DWG NO.,BNL NO.
QTY REQD						

INTERPRET IN GENERAL ACCORDANCE WITH ASME Y14.24M-1989

UNLESS OTHERWISE SPECIFIED DIMENSIONS ARE IN INCHES

DECIMAL TOLERANCES
.X ±.030
.XX ±.015
.XXX ±.005
ANGULAR TOLERANCE
± .5°

OUTSTANDING ECN

NA FINISH

BREAK SHARP EDGES
MAX. XX MIN. XX

Q.A. CATEGORY A-3		DATE
DRAWN BY	Ed Koropsak	9/10/98
CHECKED BY		
DESIGN APPROVAL		
ENGINEER APPROVAL	R. MICHNOFF	9/10/98
SUPVR. APPROVAL		

NEXT ASSEMBLY

BROOKHAVEN NATIONAL LABORATORY
UPTON, N.Y. 11973

RHIC CONTROLS WIRING DIAGRAM

BLDG. 1004A CHASSIS CFE-4A-RFY2

V102 DELAY MODULE

SIZE D | DRAWING NUMBER 94028745 | REV. A

MATERIAL: ——— SCALE: NA WEIGHT: – SHEET 33 OF 52

*AUTOCAD

REV.	ZONE	ECN NO.	DATE	BY	CKR	APP.

ACS, BNL 8/24/99 3:49 PM 8745_33A.dwg

V102 DELAY MODULE
BLDG #: 1004A
RACK #: R4ACT18
CHASSIS ID: CFE-4A-RFY2
SLOT #: 15
A16 BASE ADDRESS: EA00

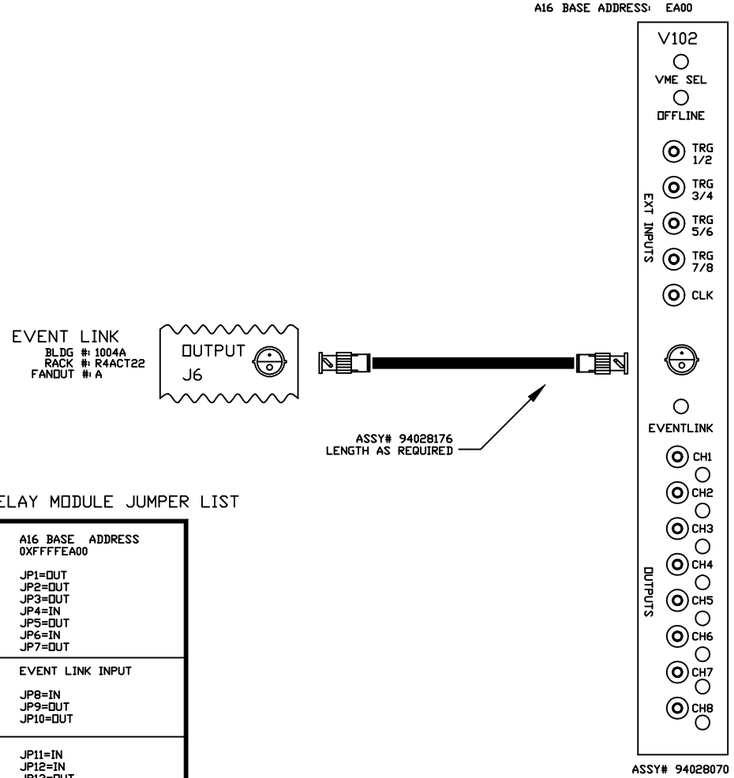

V102 DELAY MODULE JUMPER LIST

A16 BASE ADDRESS 0XFFFFEA00 JP1=OUT JP2=OUT JP3=OUT JP4=IN JP5=OUT JP6=IN JP7=OUT
EVENT LINK INPUT JP8=IN JP9=OUT JP10=OUT
JP11=IN JP12=IN JP13=OUT JP14=IN

-3	-2	-1	REF DESIGNATOR	ITEM NO.	DESCRIPTION	MAT'L DWG NO.,BNL NO.
QTY REQD						

INTERPRET IN GENERAL ACCORDANCE WITH ASME Y14.24M-1989

UNLESS OTHERWISE SPECIFIED DIMENSIONS ARE IN INCHES

DECIMAL TOLERANCES
.X ±.030
.XX ±.015
.XXX ±.005
ANGULAR TOLERANCE
± .5°

OUTSTANDING ECN

NA FINISH

BREAK SHARP EDGES
MAX. XX MIN. XX

Q.A. CATEGORY A-3		DATE
DRAWN BY	Ed Koropsak	9/10/98
CHECKED BY		
DESIGN APPROVAL		
ENGINEER APPROVAL	R. MICHNOFF	9/10/98
SUPVR. APPROVAL		

NEXT ASSEMBLY

BROOKHAVEN NATIONAL LABORATORY
UPTON, N.Y. 11973

RHIC CONTROLS WIRING DIAGRAM

BLDG. 1004A CHASSIS CFE-4A-RFY2

V102 DELAY MODULE

SIZE D

DRAWING NUMBER 94028745

REV. A

MATERIAL: ——— SCALE: NA WEIGHT: – SHEET 33A OF 52

*AUTOCAD

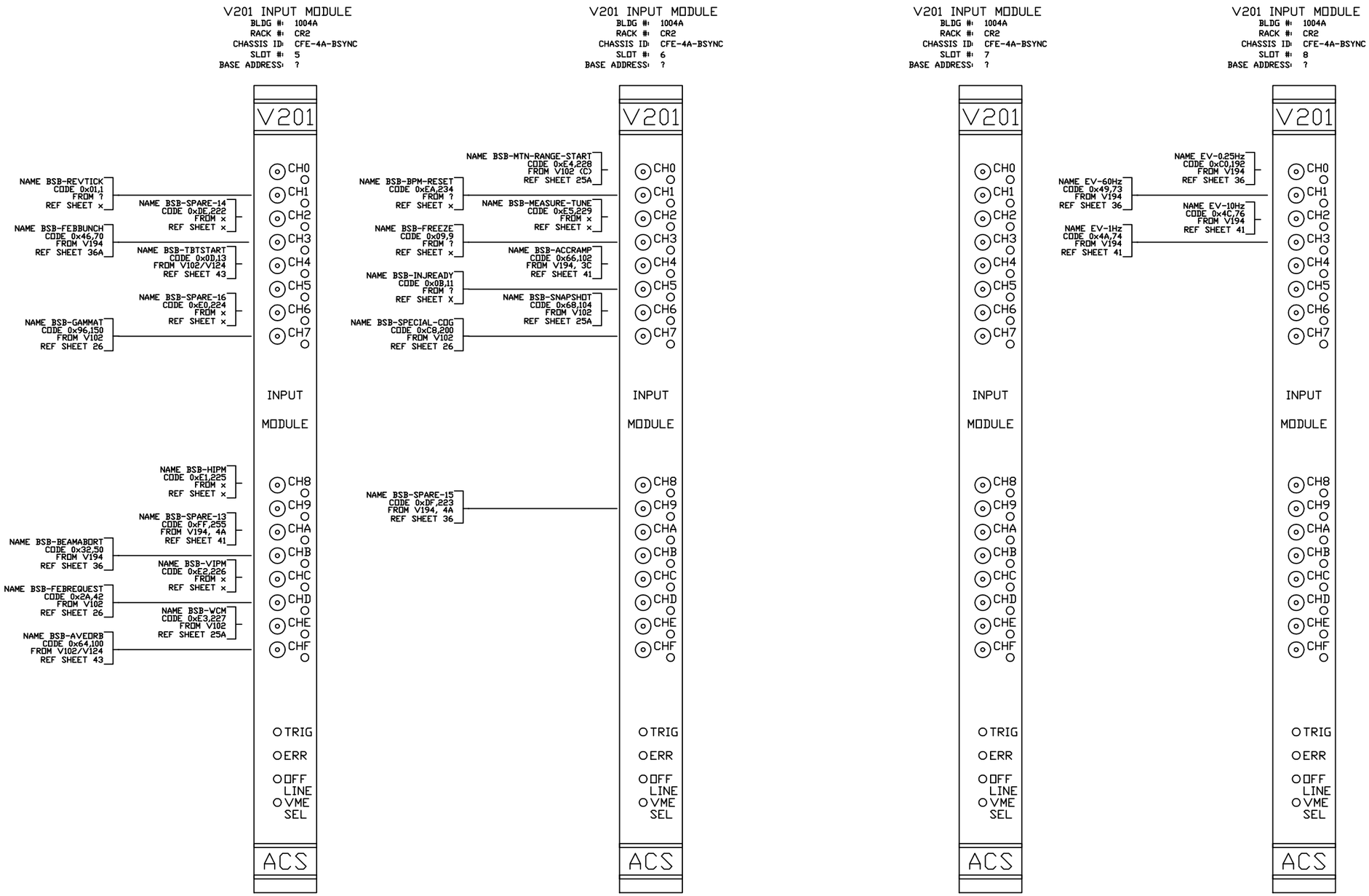

BLUE BEAM SYNC LINK INPUTS

REV.	ZONE	ECN NO.	DATE	BY	CKR	APP.

-3	-2	-1	REF DESIGNATOR	ITEM NO.	DESCRIPTION	MAT'L DWG NO./BNL NO.
QTY REQD						

INTERPRET IN GENERAL ACCORDANCE WITH ASME Y14.24M-1989

UNLESS OTHERWISE SPECIFIED DIMENSIONS ARE IN INCHES

DECIMAL TOLERANCES .X ±.030 .XX ±.015 .XXX ±.005

ANGULAR TOLERANCE ± .5°

NA FINISH — BREAK SHARP EDGES — MAX. XX MIN. XX

OUTSTANDING ECN

Q.A. CATEGORY A-3		DATE
DRAWN BY	Ed Koropsak	9/10/98
CHECKED BY		
DESIGN APPROVAL		
ENGINEER APPROVAL	R. MICHNOFF	9/10/98
SUPVR. APPROVAL		

NEXT ASSEMBLY

BROOKHAVEN NATIONAL LABORATORY
UPTON, N.Y. 11973

RHIC CONTROLS WIRING DIAGRAM

BLDG. 1004A CHASSIS CFE-4A-BSYNC

V201 INPUT MODULES

SIZE D — DRAWING NUMBER 94028745 — REV. A

MATERIAL: ——— SCALE: NA WEIGHT: – SHEET 34 OF 52

CONTROLS- 12/31/01 11:51 AM 8745_34.dwg

*AUTOCAD

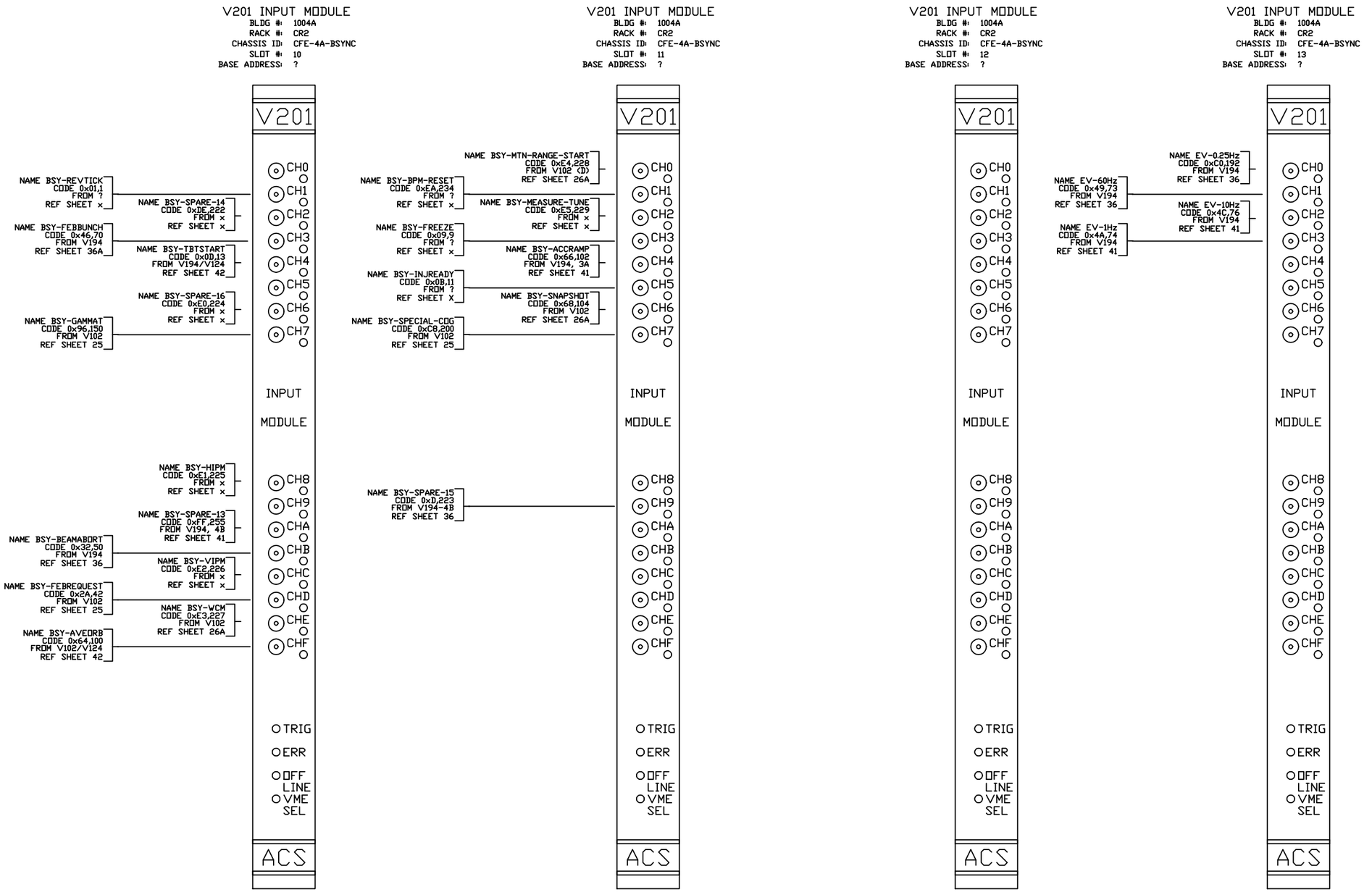

YELLOW BEAM SYNC LINK INPUTS

REV.	ZONE	ECN NO.	DATE	BY	CKR	APP.

-3	-2	-1	REF DESIGNATOR	ITEM NO.	DESCRIPTION	MAT'L DWG NO.,BNL NO.
QTY REQD						

INTERPRET IN GENERAL ACCORDANCE WITH ASME Y14.24M-1989

UNLESS OTHERWISE SPECIFIED DIMENSIONS ARE IN INCHES

DECIMAL TOLERANCES .X ±.030 .XX ±.015 .XXX ±.005

ANGULAR TOLERANCE ± .5°

NA FINISH

BREAK SHARP EDGES MAX. XX MIN. XX

OUTSTANDING ECN

Q.A. CATEGORY A-3

		DATE
DRAWN BY	Ed Koropsak	9/10/98
CHECKED BY		
DESIGN APPROVAL		
ENGINEER APPROVAL	R. MICHNOFF	9/10/98
SUPVR. APPROVAL		

NEXT ASSEMBLY

BROOKHAVEN NATIONAL LABORATORY
UPTON, N.Y. 11973

RHIC CONTROLS WIRING DIAGRAM

BLDG. 1004A CHASSIS CFE-4A-BSYNC

V201 INPUT MODULES

SIZE D | DRAWING NUMBER 94028745 | REV. A

MATERIAL: ——— SCALE: NA WEIGHT: – SHEET 35

CONTROLS- 12/31/01 11:56 AM 8745_35.dwg

*AUTOCAD

REV.	ZONE	ECN NO.	DATE	BY	CKR	APP.

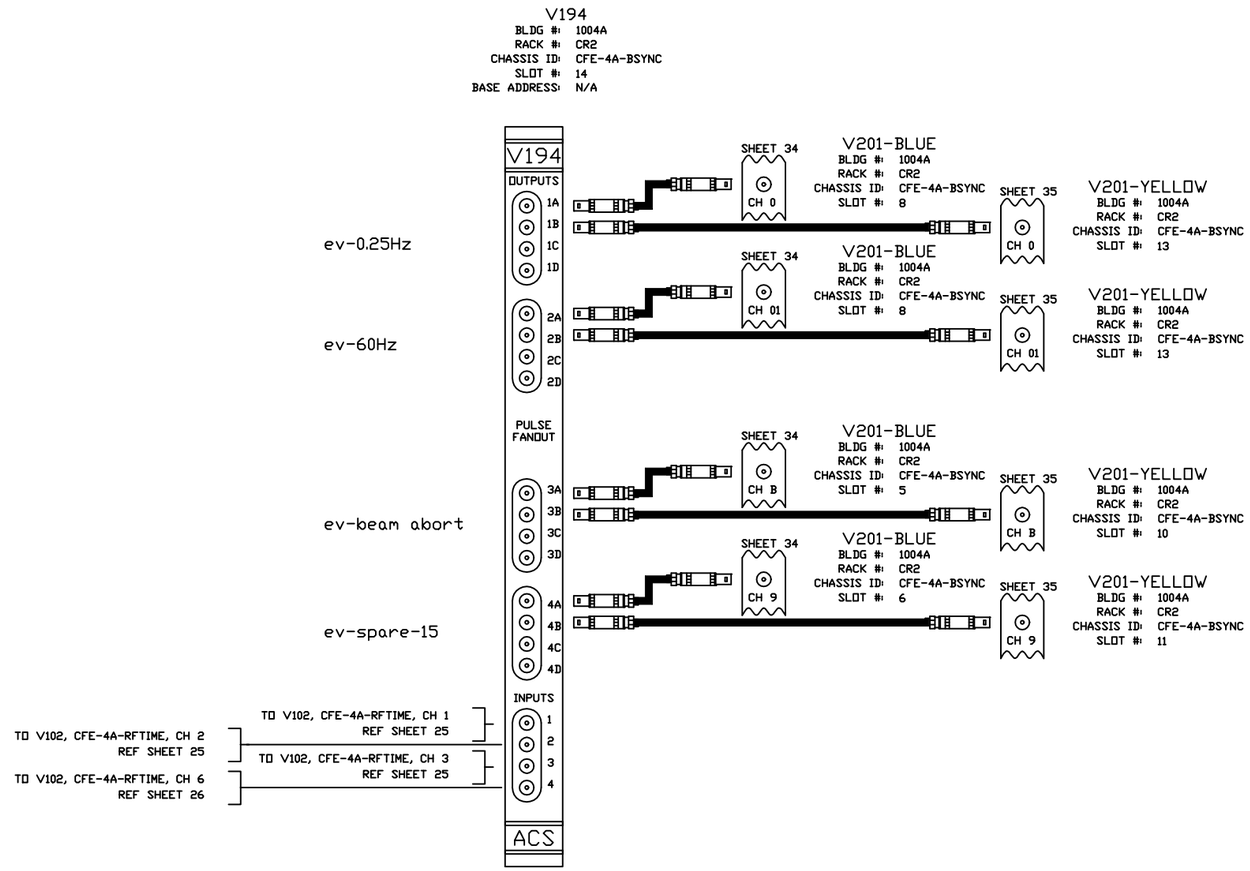

-3	-2	-1	REF DESIGNATOR	ITEM NO.	DESCRIPTION	MAT'L DWG NO.,BNL NO.
QTY REQD						

INTERPRET IN GENERAL ACCORDANCE WITH ASME Y14.24M-1989

UNLESS OTHERWISE SPECIFIED DIMENSIONS ARE IN INCHES

DECIMAL TOLERANCES
.X ±.030
.XX ±.015
.XXX ±.005
ANGULAR TOLERANCE
± .5°

NA FINISH

BREAK SHARP EDGES
MAX. XX MIN. XX

OUTSTANDING ECN

Q.A. CATEGORY A-3		DATE
DRAWN BY	Ed Koropsak	9/16/98
CHECKED BY		
DESIGN APPROVAL		
ENGINEER APPROVAL	R. MICHNOFF	9/16/98
SUPVR. APPROVAL		

NEXT ASSEMBLY

BROOKHAVEN NATIONAL LABORATORY
UPTON, N.Y. 11973

RHIC CONTROLS WIRING DIAGRAM

BLDG. 1004A CHASSIS CFE-4A-BSYNC

V194 FANOUT MODULES

SIZE D

DRAWING NUMBER 94028745

REV. A

MATERIAL: ——— SCALE: NA WEIGHT: – SHEET 36 OF 52

*AUTOCAD

ACS, BNL 9/12/00 1:22 PM 8745_36A.dwg

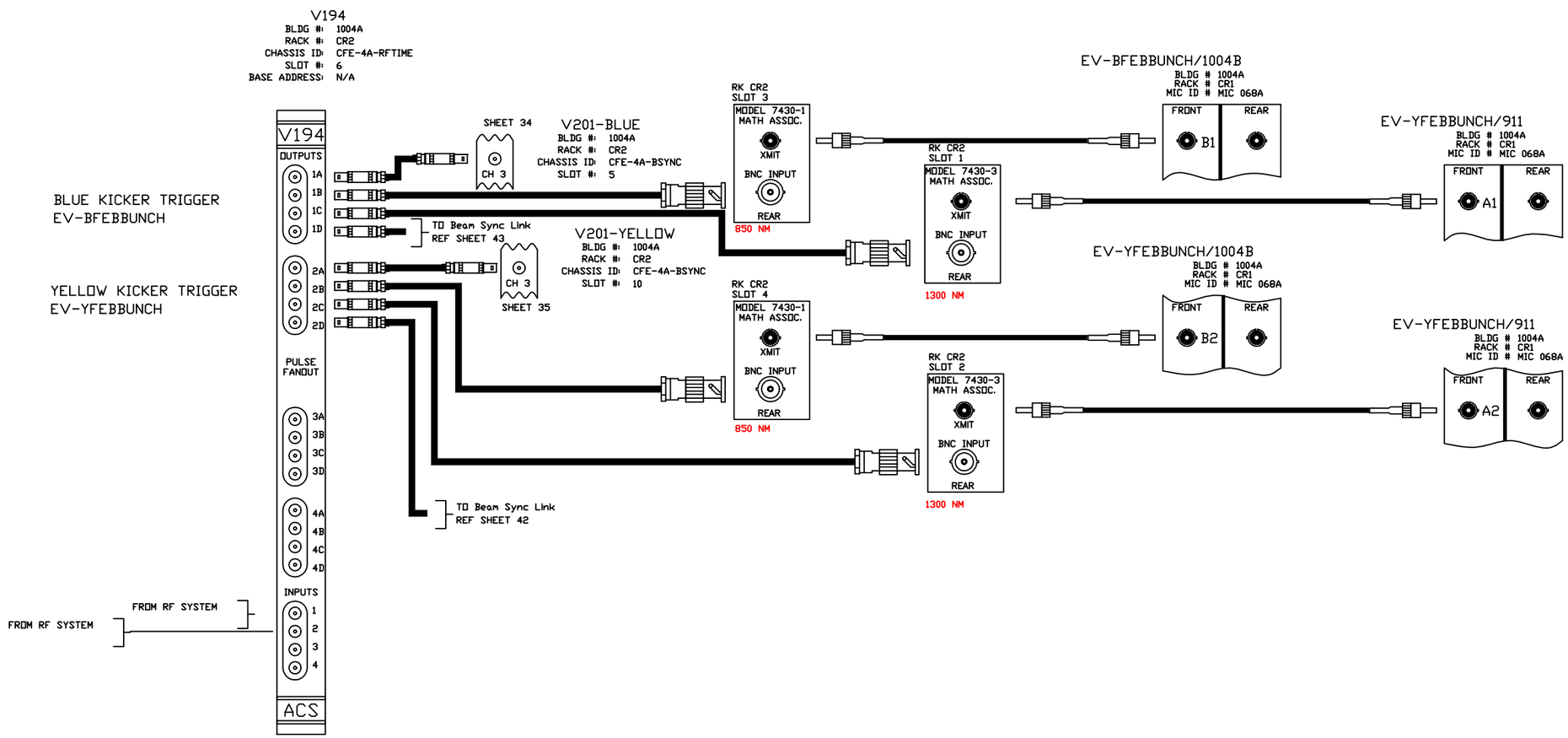

-3	-2	-1	REF DESIGNATOR	ITEM NO.	DESCRIPTION	MAT'L. DWG NO./INL NO.
QTY REQD						

INTERPRET IN GENERAL ACCORDANCE WITH ASME Y14.24M-1989

UNLESS OTHERWISE SPECIFIED DIMENSIONS ARE IN INCHES

DECIMAL TOLERANCES
.X ±.030
.XX ±.015
.XXX ±.005
ANGULAR TOLERANCE
± .5°

OUTSTANDING ECN

NA FINISH

BREAK SHARP EDGES
MAX. XX MIN. XX

Q.A. CATEGORY A-3		DATE
DRAWN BY	Ed Koropsak	9/16/98
CHECKED BY		
DESIGN APPROVAL		
ENGINEER APPROVAL	R. MICHNOFF	9/16/98
SUPVR. APPROVAL		

NEXT ASSEMBLY

BROOKHAVEN NATIONAL LABORATORY
UPTON, N.Y. 11973

RHIC CONTROLS WIRING DIAGRAM

BLDG. 1004A CHASSIS CFE-4A-BSYNC

V194 FANOUT MODULES

SIZE D | DRAWING NUMBER 94028745 | REV. A

MATERIAL: ——— SCALE: NA WEIGHT: – SHEET 36A OF 52

*AUTOCAD

ACS, BNL 8/25/99 2:00 PM 8745_37.dwg

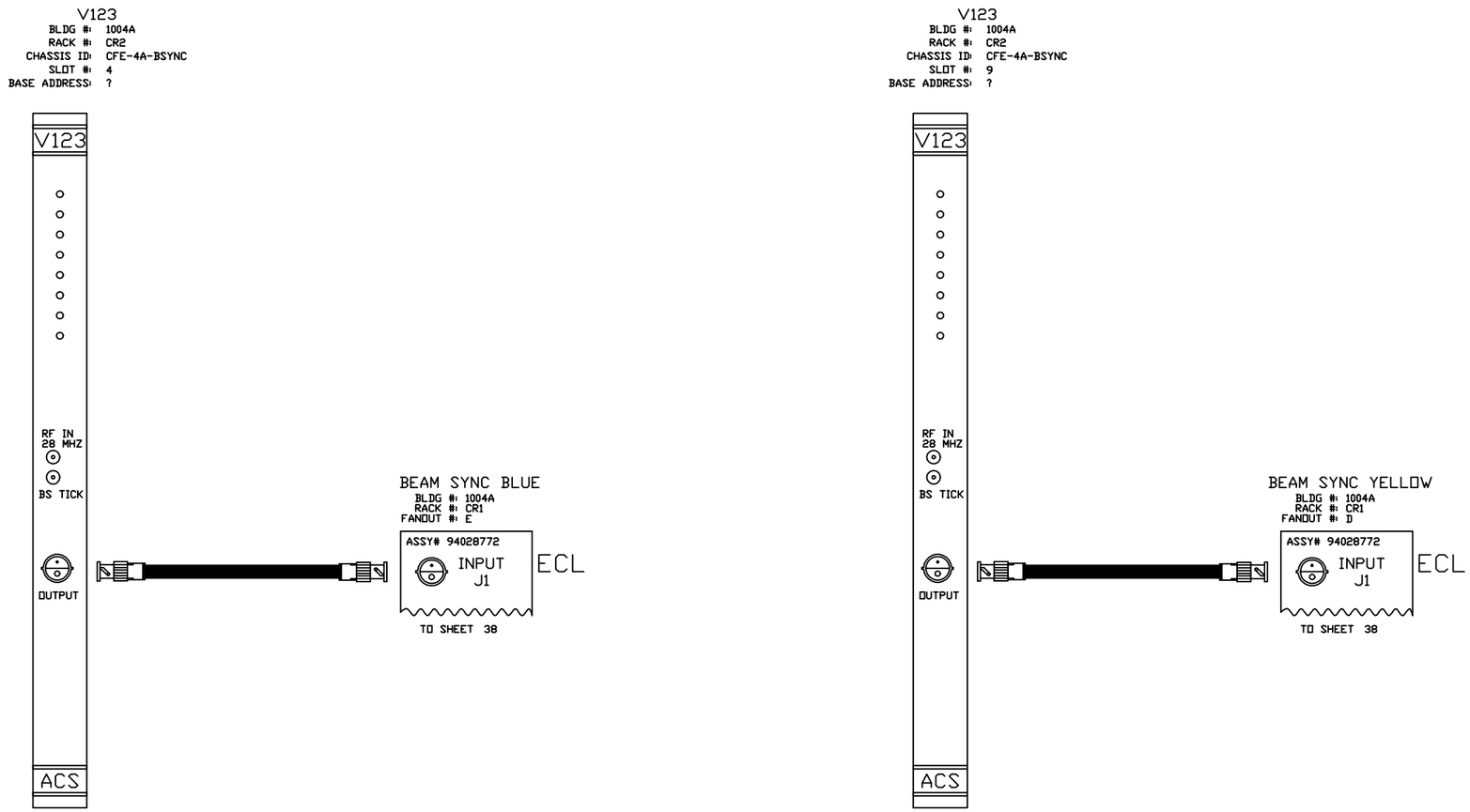

REV.	ZONE	ECN NO.	DATE	BY	CKR	APP.

-3	-2	-1	REF DESIGNATOR	ITEM NO.	DESCRIPTION	MAT'L. DWG NO.,BNL NO.
QTY REQD						

INTERPRET IN GENERAL ACCORDANCE WITH ASME Y14.24M–1989

UNLESS OTHERWISE SPECIFIED DIMENSIONS ARE IN INCHES

DECIMAL TOLERANCES
.X ±.030
.XX ±.015
.XXX ±.005
ANGULAR TOLERANCE
± .5°

NA FINISH

BREAK SHARP EDGES
MAX. XX MIN. XX

OUTSTANDING ECN

Q.A. CATEGORY A–3		DATE
DRAWN BY	Ed Koropsak	9/16/98
CHECKED BY		
DESIGN APPROVAL		
ENGINEER APPROVAL	R. MICHNOFF	9/16/98
SUPVR. APPROVAL		
NEXT ASSEMBLY		

BROOKHAVEN NATIONAL LABORATORY
UPTON, N.Y. 11973

RHIC CONTROLS WIRING DIAGRAM

BLDG. 1004A CHASSIS CFE–4A–BSYNC

V123 BEAMSYNC GEN. MODULES

SIZE D | DRAWING NUMBER 94028745 | REV. A

MATERIAL: ——— SCALE: NA WEIGHT: – SHEET 37 OF 52

*AUTOCAD

REV.	ZONE	ECN NO.	DATE	BY	CKR	APP.

BNL, BNL 5/23/00 9:46 AM 8745_38.dwg

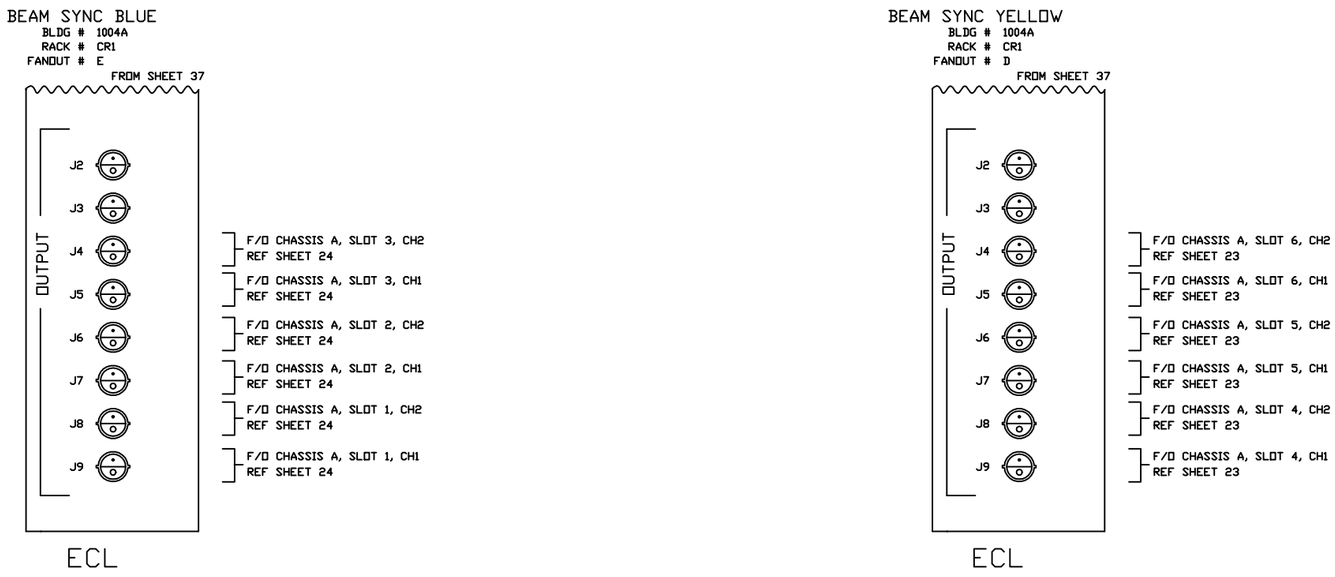

-3	-2	-1	REF DESIGNATOR	ITEM NO.	DESCRIPTION	MAT'L. DWG NO.,BNL NO.
QTY REQD						

INTERPRET IN GENERAL ACCORDANCE WITH ASME Y14.24M-1989

UNLESS OTHERWISE SPECIFIED DIMENSIONS ARE IN INCHES

DECIMAL TOLERANCES
.X ±.030
.XX ±.015
.XXX ±.005
ANGULAR TOLERANCE
± .5°

NA FINISH

BREAK SHARP EDGES
MAX. XX MIN. XX

OUTSTANDING ECN

Q.A. CATEGORY A-3		DATE
DRAWN BY	Ed Koropsak	9/16/98
CHECKED BY		
DESIGN APPROVAL		
ENGINEER APPROVAL	R. MICHNOFF	9/16/98
SUPVR. APPROVAL		
NEXT ASSEMBLY		

BROOKHAVEN NATIONAL LABORATORY
UPTON, N.Y. 11973

RHIC CONTROLS WIRING DIAGRAM
SERVICE BLDG. 1004A

BEAM SYNC FANOUTS

SIZE D
94028745
DRAWING NUMBER
REV. A

MATERIAL: ——— SCALE: NA WEIGHT: – SHEET 38 OF X

*AUTOCAD

ACS, BNL 8/25/99 10:37 AM 8745_39.dwg

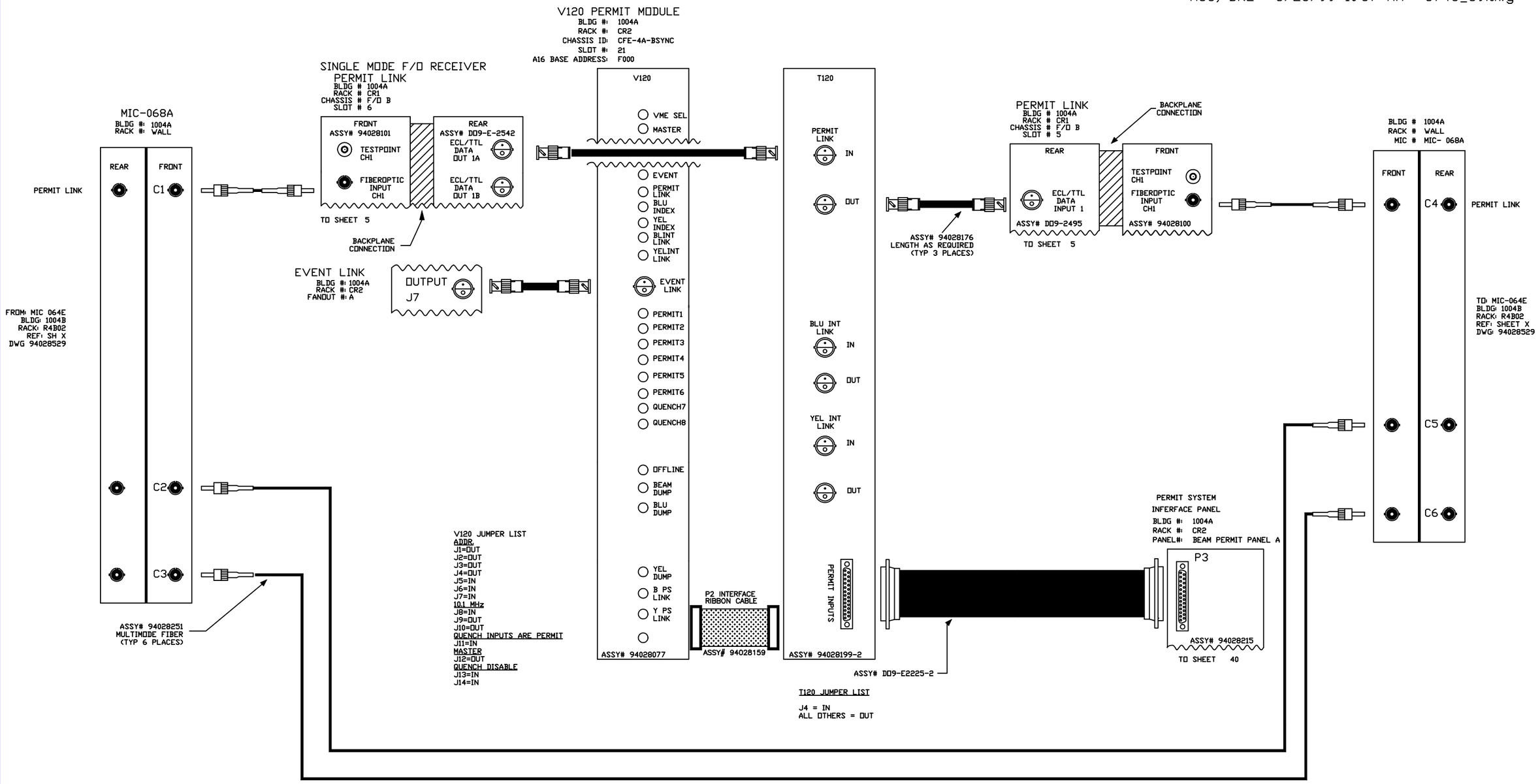

REV.	ZONE	ECN NO.	DATE	BY	CKR	APP.

-3	-2	-1	REF DESIGNATOR	ITEM NO.	DESCRIPTION	MAT'L DWG NO./BNL NO.
QTY REQD						

INTERPRET IN GENERAL ACCORDANCE WITH ASME Y14.24M-1989

UNLESS OTHERWISE SPECIFIED DIMENSIONS ARE IN INCHES

DECIMAL TOLERANCES
.X ±.030
.XX ±.015
.XXX ±.005
ANGULAR TOLERANCE
± .5°

NA FINISH — BREAK SHARP EDGES — MAX. XX MIN. XX

OUTSTANDING ECN

Q.A. CATEGORY A-3		DATE
DRAWN BY	Ed Koropsak	9/18/98
CHECKED BY		
DESIGN APPROVAL		
ENGINEER APPROVAL	R. MICHNOFF	9/18/98
SUPVR. APPROVAL		

NEXT ASSEMBLY

BROOKHAVEN NATIONAL LABORATORY
UPTON, N.Y. 11973

RHIC CONTROLS WIRING DIAGRAM

SERVIVE BLDG. 1004A, CHASSIS CFE-4A-BSYNC

V120/T120 PERMIT SYSTEM

SIZE D — DRAWING NUMBER 94028745 — REV. A

MATERIAL: ——— SCALE: NA WEIGHT: – SHEET 39 OF X

*AUTOCAD

REV.	ZONE	ECN NO.	DATE	BY	CKR	APP.

CONTROLS- 12/31/01 2:16 PM 8745_40.dwg

PERMIT SYSTEM INTERFACE MODULE

BLDG #: 1004A
RACK #: CR2
PANEL #: PERMIT I/F PANEL A

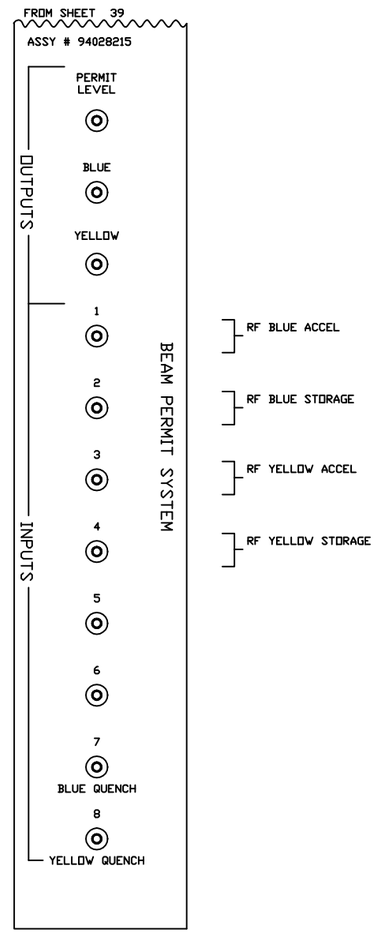

-3	-2	-1	REF DESIGNATOR	ITEM NO.	DESCRIPTION	MAT'L DWG NO.,BNL NO.
QTY REQD						

INTERPRET IN GENERAL ACCORDANCE WITH ASME Y14.24M-1989

UNLESS OTHERWISE SPECIFIED DIMENSIONS ARE IN INCHES

DECIMAL TOLERANCES
.X ±.030
.XX ±.015
.XXX ±.005
ANGULAR TOLERANCE
± .5°

NA FINISH

BREAK SHARP EDGES
MAX. XX MIN. XX

OUTSTANDING ECN

Q.A. CATEGORY A-3		DATE
DRAWN BY	Ed Koropsak	9/18/98
CHECKED BY		
DESIGN APPROVAL		
ENGINEER APPROVAL	R. MICHNOFF	9/18/98
SUPVR. APPROVAL		

NEXT ASSEMBLY

BROOKHAVEN NATIONAL LABORATORY
UPTON, N.Y. 11973

RHIC CONTROLS WIRING DIAGRAM

BLDG. 1004A, RACK xxx

PERMIT SYSTEM INTERFACE PANEL

SIZE D | DRAWING NUMBER 94028745 | REV. A

MATERIAL: ——— SCALE: NA WEIGHT: – SHEET 40 OF X

*AUTOCAD

CONTROLS- 12/31/01 1:08 PM 8745_41.dwg

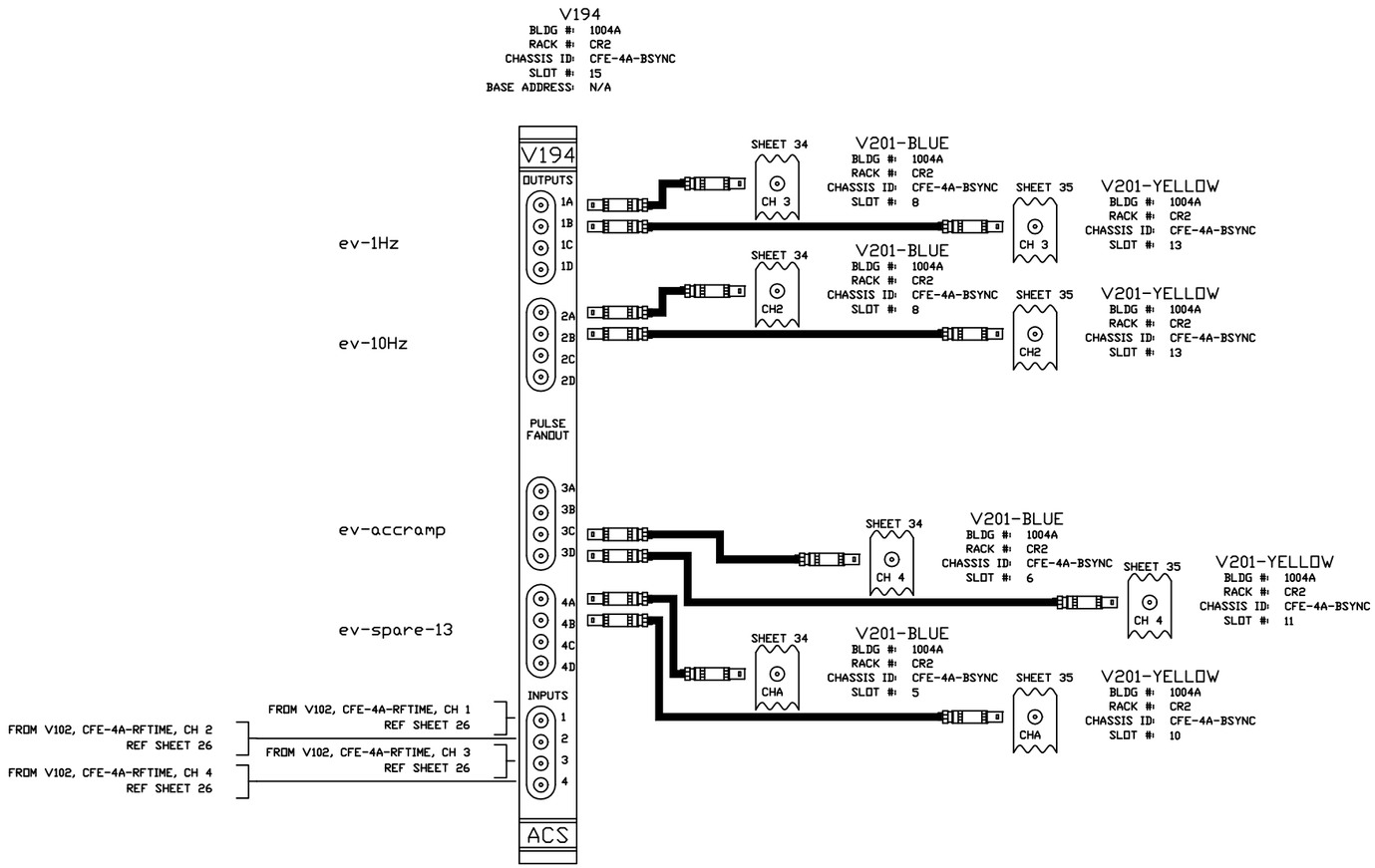

REV.	ZONE	ECN NO.	DATE	BY	CKR	APP.

-3	-2	-1	REF DESIGNATOR	ITEM NO.	DESCRIPTION	MAT'L DWG NO.,BNL NO.
QTY REQD						

INTERPRET IN GENERAL ACCORDANCE WITH ASME Y14.24M-1989

UNLESS OTHERWISE SPECIFIED DIMENSIONS ARE IN INCHES

DECIMAL TOLERANCES
.X ±.030
.XX ±.015
.XXX ±.005
ANGULAR TOLERANCE
± .5°

NA FINISH

BREAK SHARP EDGES
MAX. XX MIN. XX

OUTSTANDING ECN

Q.A. CATEGORY A-3		DATE
DRAWN BY	Bill Venegas	5/24/99
CHECKED BY		
DESIGN APPROVAL		
ENGINEER APPROVAL	R. MICHNOFF	9/16/98
SUPVR. APPROVAL		
NEXT ASSEMBLY		

BROOKHAVEN NATIONAL LABORATORY
UPTON, N.Y. 11973

RHIC CONTROLS WIRING DIAGRAM

BLDG. 1004A CHASSIS CFE-4A-BSYNC

V194 FANOUT MODULES

SIZE D

94028745

DRAWING NUMBER

REV. A

MATERIAL: ——— SCALE: NA WEIGHT: – SHEET 41 OF XX

*AUTOCAD

CONTROLS- 12/31/01 1:29 PM 8745_42.dwg

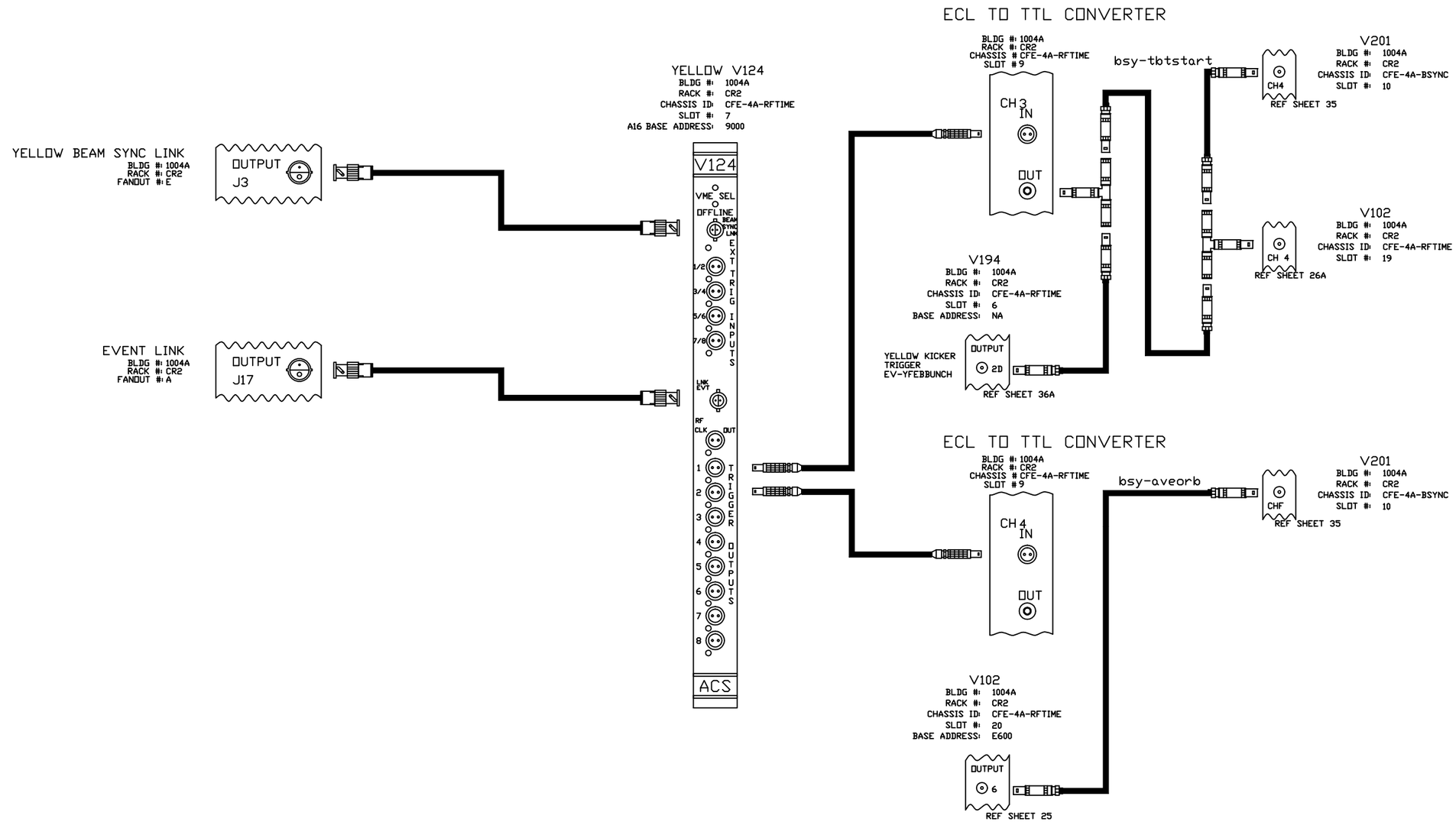

-3	-2	-1	REF DESIGNATOR	ITEM NO.	DESCRIPTION	MAT'L DWG NO.,BNL NO.
QTY REQD						

INTERPRET IN GENERAL ACCORDANCE WITH ASME Y14.24M-1989

UNLESS OTHERWISE SPECIFIED DIMENSIONS ARE IN INCHES

DECIMAL TOLERANCES
.X ±.030
.XX ±.015
.XXX ±.005
ANGULAR TOLERANCE
± .5°

OUTSTANDING ECN

NA FINISH

BREAK SHARP EDGES
MAX. XX MIN. XX

Q.A. CATEGORY A-3		DATE
DRAWN BY	AL WATSON	4/14/00
CHECKED BY		
DESIGN APPROVAL		
ENGINEER APPROVAL		
SUPVR. APPROVAL		

NEXT ASSEMBLY

BROOKHAVEN NATIONAL LABORATORY
UPTON, N.Y. 11973

RHIC CONTROLS WIRING DIAGRAM

BLDG. 1004A CHASSIS CFE-4A-RFTIME

V124, YELLOW

SIZE D

94028745

DRAWING NUMBER

REV. A

MATERIAL:

SCALE: NA

WEIGHT:

SHEET 42

*AUTOCAD

CONTROLS- 12/31/01 1:28 PM 8745_43.dwg

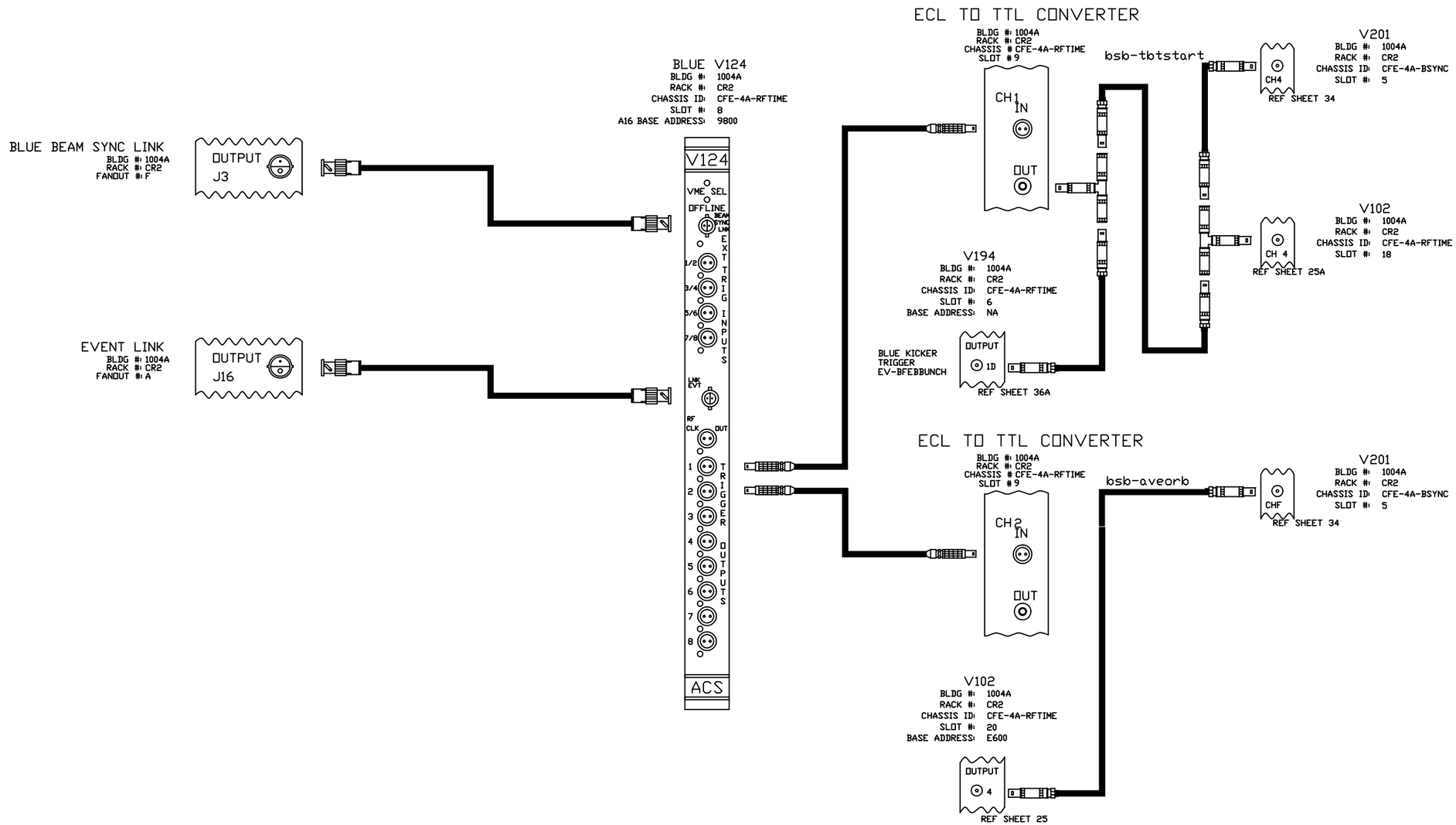

-3	-2	-1	REF DESIGNATOR	ITEM NO.	DESCRIPTION	MAT'L DWG NO.,SPL NO.
QTY REQD						

INTERPRET IN GENERAL ACCORDANCE WITH ASME Y14.24M-1989

UNLESS OTHERWISE SPECIFIED DIMENSIONS ARE IN INCHES

DECIMAL TOLERANCES .X ±.030 .XX ±.015 .XXX ±.005

ANGULAR TOLERANCE ± .5°

OUTSTANDING ECN

NA FINISH

BREAK SHARP EDGES MAX. XX MIN. XX

Q.A. CATEGORY A-3

		DATE
DRAWN BY	AL WATSON	4/14/00
CHECKED BY		
DESIGN APPROVAL		
ENGINEER APPROVAL		
SUPVR. APPROVAL		

NEXT ASSEMBLY

BROOKHAVEN NATIONAL LABORATORY

UPTON, N.Y. 11973

RHIC CONTROLS WIRING DIAGRAM

BLDG. 1004A CHASSIS CFE-4A-RFTIME

V124, BLUE

SIZE D

94028745

DRAWING NUMBER

REV. A

MATERIAL:

SCALE: NA

WEIGHT:

SHEET 43

*AUTOCAD

REV.	ZONE	ECN NO.	DATE	BY	CKR	APP.

ACS, BNL 9/12/00 1:57 PM 8745_44.dwg

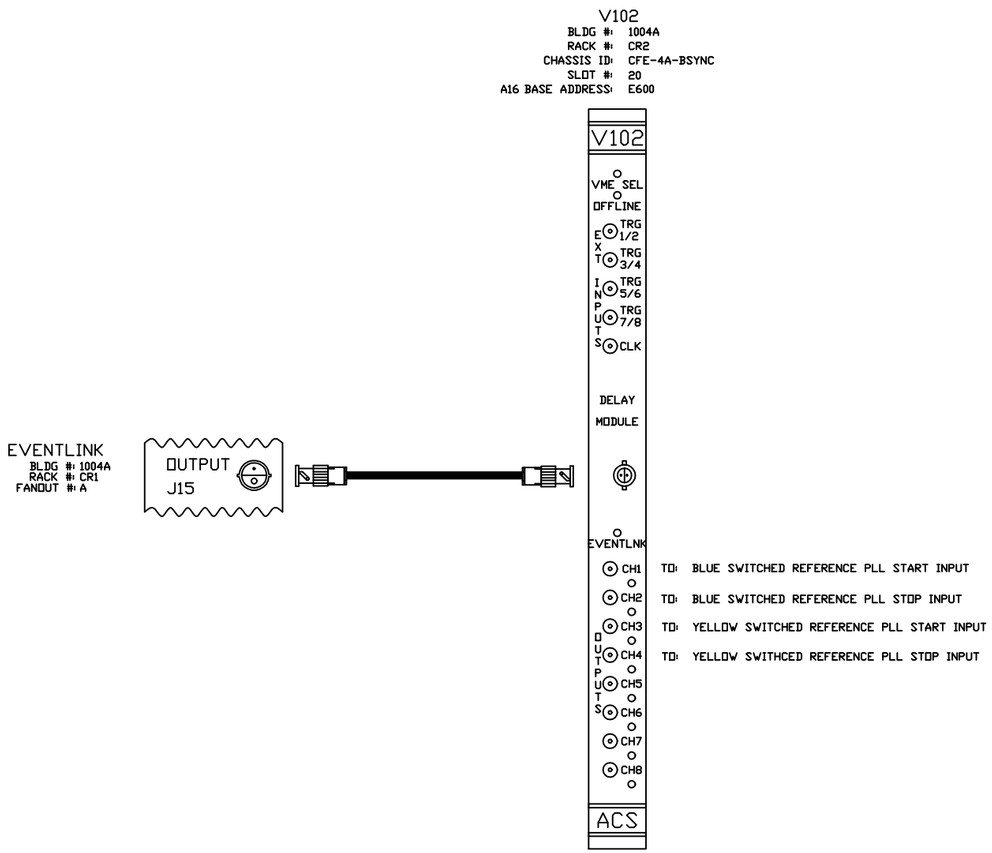

-3	-2	-1	REF DESIGNATOR	ITEM NO.	DESCRIPTION	MAT'L DWG NO.,BNL NO.
QTY REQD						

INTERPRET IN GENERAL ACCORDANCE WITH ASME Y14.24M-1989

UNLESS OTHERWISE SPECIFIED DIMENSIONS ARE IN INCHES

DECIMAL TOLERANCES
.X ±.030
.XX ±.015
.XXX ±.005
ANGULAR TOLERANCE
± .5°

NA FINISH

BREAK SHARP EDGES
MAX. XX MIN. XX

OUTSTANDING ECN

Q.A. CATEGORY A-3	DATE	
DRAWN BY Al Watson	7/6/00	
CHECKED BY		
DESIGN APPROVAL		
ENGINEER APPROVAL		
SUPVR. APPROVAL		
NEXT ASSEMBLY		

BROOKHAVEN NATIONAL LABORATORY
UPTON, N.Y. 11973

RHIC CONTROLS WIRING DIAGRAM

BLDG 1004A, CFE-4A-BSYNC

V102

SIZE D — DRAWING NUMBER 94028745 — REV. A

MATERIAL: ——— SCALE: NA WEIGHT: – SHEET 44

*AUTOCAD

REV.	ZONE	ECN NO.	DATE	BY	CKR	APP.

ACS, BNL 9/12/00 1:58 PM 8745_45.dwg

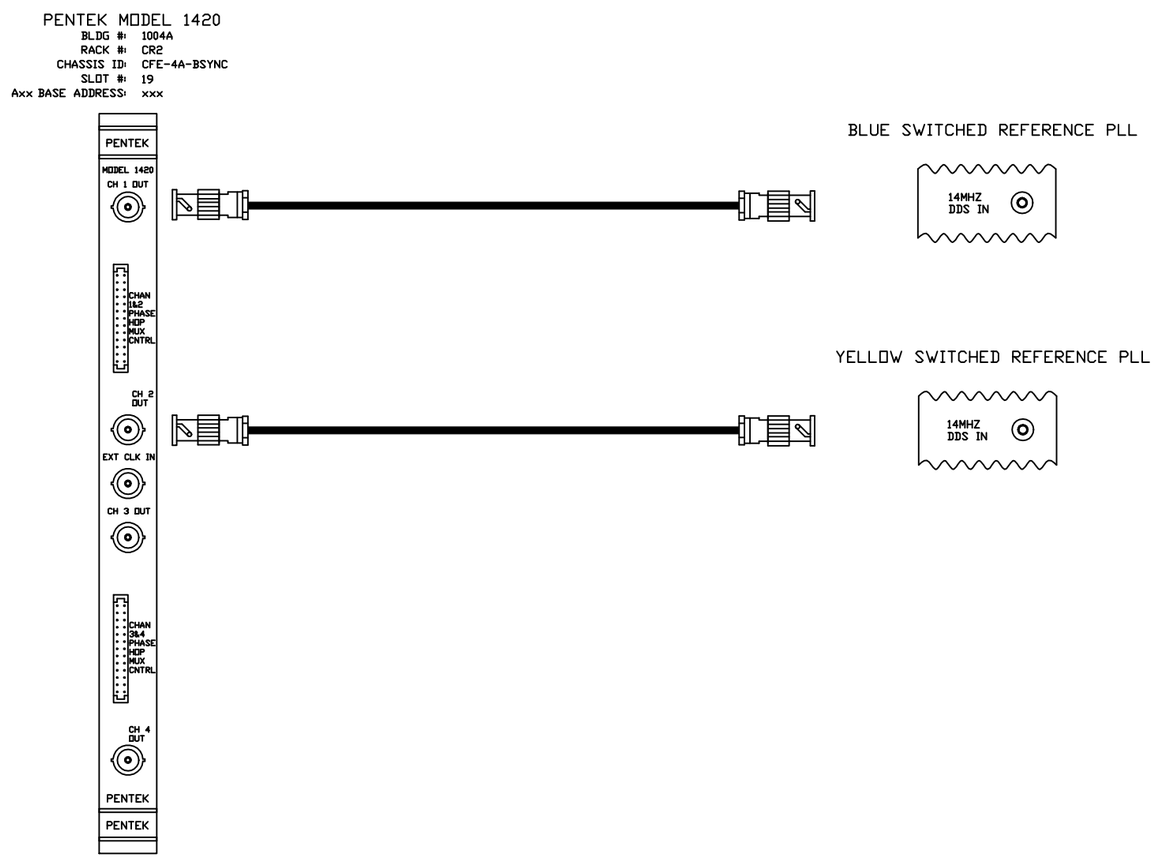

-3	-2	-1	REF DESIGNATOR	ITEM NO.	DESCRIPTION	MAT'L. DWG NO.,BNL NO.
QTY REQD						

INTERPRET IN GENERAL ACCORDANCE WITH ASME Y14.24M-1989

UNLESS OTHERWISE SPECIFIED DIMENSIONS ARE IN INCHES

DECIMAL TOLERANCES
.X ±.030
.XX ±.015
.XXX ±.005
ANGULAR TOLERANCE ± .5°

OUTSTANDING ECN

NA FINISH

BREAK SHARP EDGES MAX. XX MIN. XX

Q.A. CATEGORY A-3		DATE
DRAWN BY	Al Watson	7/6/00
CHECKED BY		
DESIGN APPROVAL		
ENGINEER APPROVAL		
SUPVR. APPROVAL		
NEXT ASSEMBLY		

BROOKHAVEN NATIONAL LABORATORY
UPTON, N.Y. 11973

RHIC CONTROLS WIRING DIAGRAM

BLDG 1004A, CFE-4A-BSYNC

PENTEK 1420

SIZE D — DRAWING NUMBER 94028745 — REV. A

MATERIAL: ——— SCALE: NA WEIGHT: – SHEET 45

*AUTOCAD

REV.	ZONE	ECN NO.	DATE	BY	CKR	APP.

ACS, BNL 9/12/00 1:59 PM 8745_46.dwg

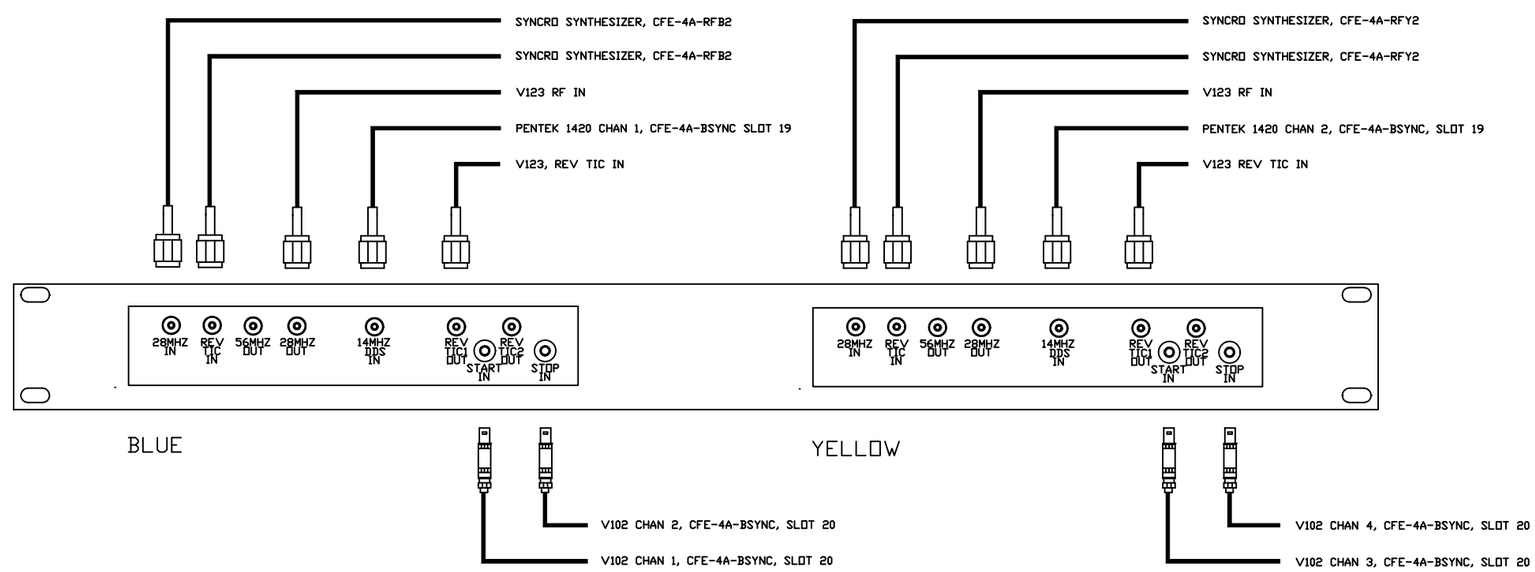

-3	-2	-1	REF DESIGNATOR	ITEM NO.	DESCRIPTION	MAT'L. DWG NO.,BNL NO.
QTY REQD						

INTERPRET IN GENERAL ACCORDANCE WITH ASME Y14.24M-1989

UNLESS OTHERWISE SPECIFIED DIMENSIONS ARE IN INCHES

DECIMAL TOLERANCES
.X ±.030
.XX ±.015
.XXX ±.005
ANGULAR TOLERANCE
± .5°

OUTSTANDING ECN

NA FINISH

BREAK SHARP EDGES
MAX. XX MIN. XX

Q.A. CATEGORY A-3		DATE
DRAWN BY	Al Watson	7/6/00
CHECKED BY		
DESIGN APPROVAL		
ENGINEER APPROVAL		
SUPVR. APPROVAL		

NEXT ASSEMBLY

BROOKHAVEN NATIONAL LABORATORY
UPTON, N.Y. 11973

RHIC CONTROLS WIRING DIAGRAM

BLDG 1004A, CFE-4A-BSYNC

SWITCHED REFERENCE PLL

SIZE D — DRAWING NUMBER 94028745 — REV. A

MATERIAL: ——— SCALE: NA WEIGHT: – SHEET 46

*AUTOCAD

C-A, BNL 6/29/01 4:06 PM 8745_47.dwg

REV.	ZONE	ECN NO.	DATE	BY	CKR	APP.

FRONT END COMPUTER
BLDG #: 1004A
RACK #: RF DIPOLE
CHASSIS ID: CFE-4A-ACDIPOLE
SLOT#: 1
FEC NAME: cfe-4a-acdipole

DEVICE: MM-6702 MEMORY MODULE
BLDG #: 1004A
RACK #: RF DIPOLE
CHASSIS ID: CFE-4A-ACDIPOLE
SLOT #: 2
A24 BASE ADDRESS: XXX

DEVICE: V108 UTILITY MODULE
BLDG #: 1004A
RACK #: RF DIPOLE
CHASSIS ID: CFE-4A-ACDIPOLE
SLOT #: 3
A24 BASE ADDRESS: 004000

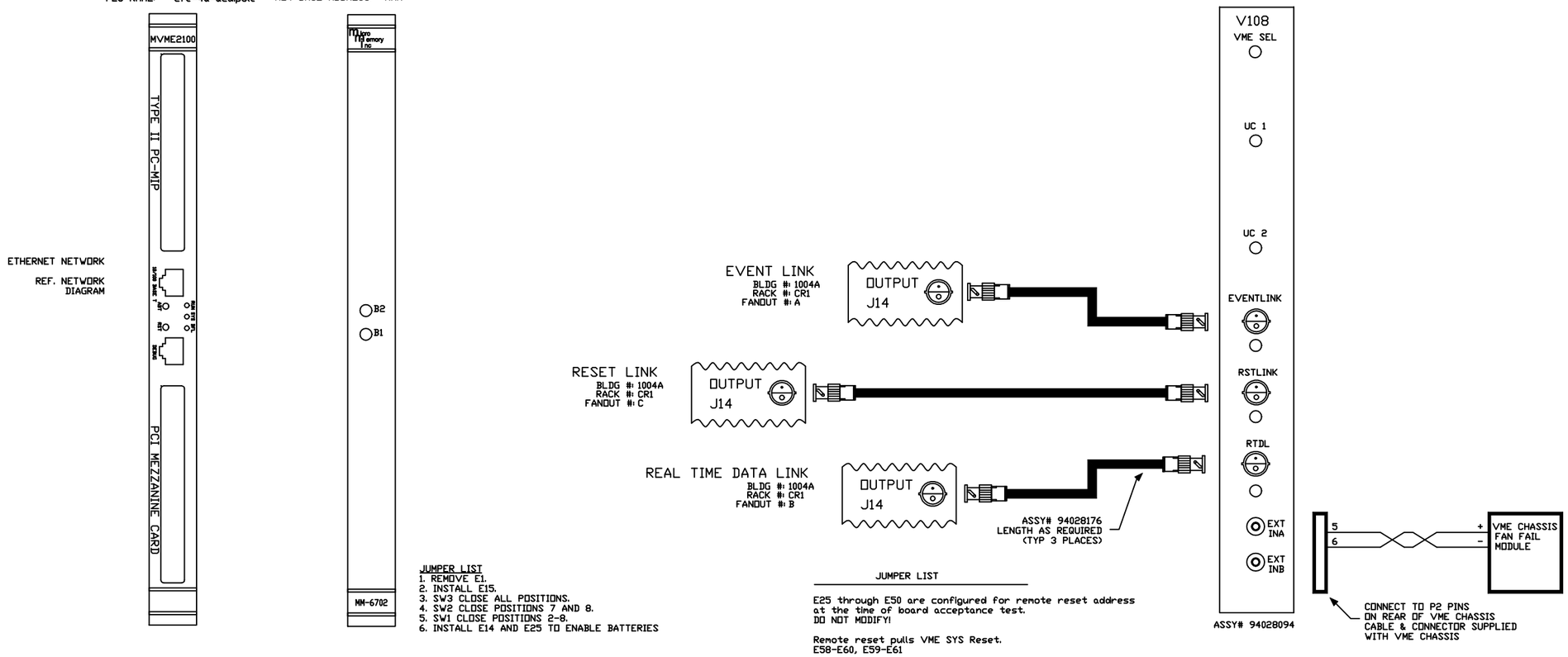

JUMPER LIST
1. REMOVE E1.
2. INSTALL E15.
3. SW3 CLOSE ALL POSITIONS.
4. SW2 CLOSE POSITIONS 7 AND 8.
5. SW1 CLOSE POSITIONS 2-8.
6. INSTALL E14 AND E25 TO ENABLE BATTERIES

JUMPER LIST

E25 through E50 are configured for remote reset address at the time of board acceptance test.
DO NOT MODIFY!

Remote reset pulls VME SYS Reset.
E58-E60, E59-E61

A24 BASE ADDRESS= 4000h
E57-E13, E2-E14, E3-E15, E4-E16, E5-E17, E6-E18
E7-E19, E8-E20, E9-E21, E10-E22, E11-E24, E57-E23
SW1=OPEN
SW2=CLOSED
SW3=OPEN
SW4=OPEN

-3	-2	-1	REF DESIGNATOR	ITEM NO.	DESCRIPTION	MAT'L DWG NO./BNL NO.
QTY REQD						

INTERPRET IN GENERAL ACCORDANCE WITH ASME Y14.24M-1989
UNLESS OTHERWISE SPECIFIED DIMENSIONS ARE IN INCHES
DECIMAL TOLERANCES
.X ±.030
.XX ±.015
.XXX ±.005
ANGULAR TOLERANCE ± .5°
NA FINISH
BREAK SHARP EDGES
MAX. XX MIN. XX
OUTSTANDING ECN

Q.A. CATEGORY A-3		DATE
DRAWN BY	Ed Koropsak	6/18/01
CHECKED BY		
DESIGN APPROVAL		
ENGINEER APPROVAL	R. MICHNOFF	6/18/01
SUPVR. APPROVAL		
NEXT ASSEMBLY		

BROOKHAVEN NATIONAL LABORATORY
UPTON, N.Y. 11973
RHIC CONTROLS WIRING DIAGRAM
BLDG. 1004A, VME CHASSIS CFE-4A-ACDIPOLE
FT END COMP/V108 UTIL MODULE

SIZE D
94028745
DRAWING NUMBER
REV. A
MATERIAL: ——— SCALE: NA WEIGHT: – SHEET 47 OF X

*AUTOCAD

REV.	ZONE	ECN NO.	DATE	BY	CKR	APP.

BNL 11/1/01 9:07 AM 8745_48.dwg

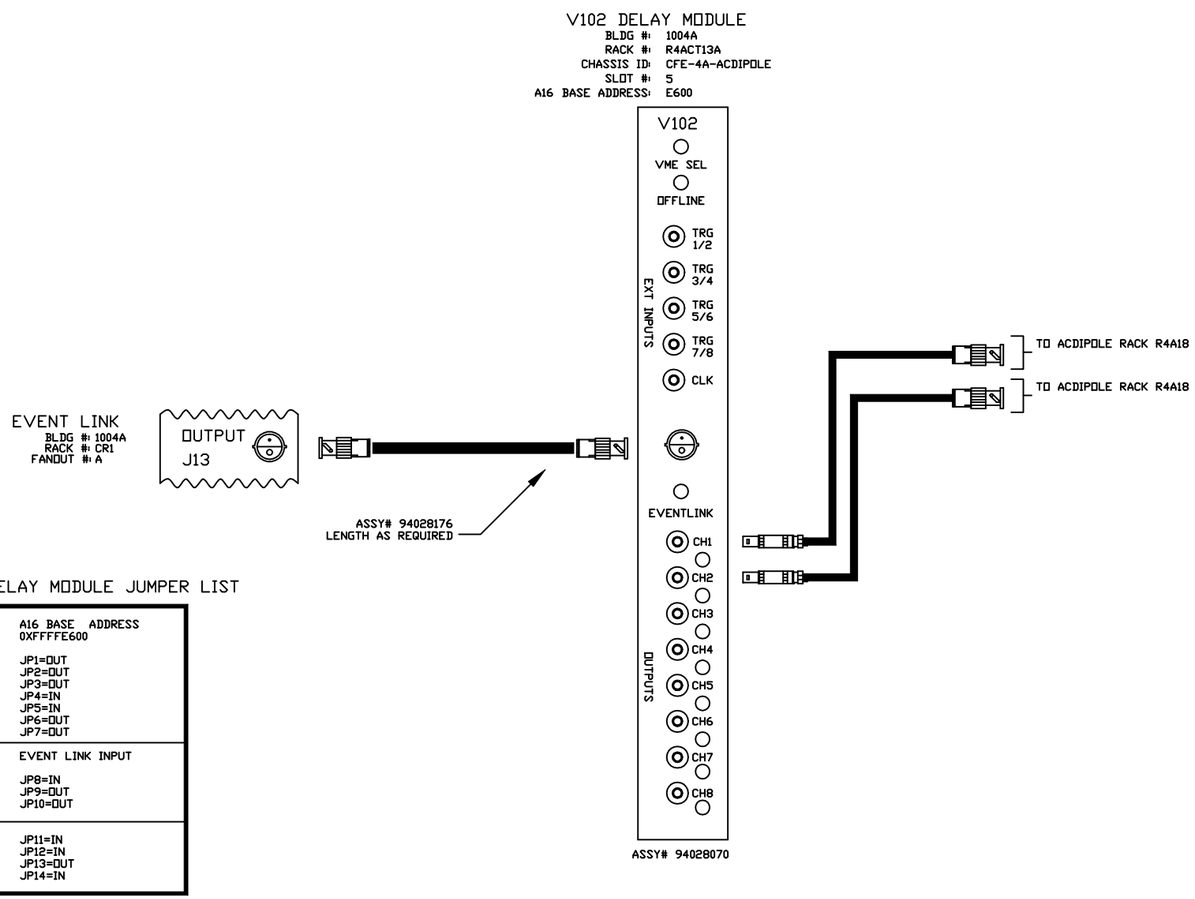

V102 DELAY MODULE JUMPER LIST

A16 BASE ADDRESS 0XFFFFE600 JP1=OUT JP2=OUT JP3=OUT JP4=IN JP5=IN JP6=OUT JP7=OUT
EVENT LINK INPUT JP8=IN JP9=OUT JP10=OUT
JP11=IN JP12=IN JP13=OUT JP14=IN

-3	-2	-1	REF DESIGNATOR	ITEM NO.	DESCRIPTION	MAT'L DWG NO./INL NO.
QTY REQD						

INTERPRET IN GENERAL ACCORDANCE WITH ASME Y14.24M-1989

UNLESS OTHERWISE SPECIFIED DIMENSIONS ARE IN INCHES

DECIMAL TOLERANCES
.X ±.030
.XX ±.015
.XXX ±.005
ANGULAR TOLERANCE
± .5°

NA FINISH

BREAK SHARP EDGES
MAX. XX MIN. XX

OUTSTANDING ECN

Q.A. CATEGORY A-3		DATE
DRAWN BY	Ed Koropsak	11/01/01
CHECKED BY		
DESIGN APPROVAL		
ENGINEER APPROVAL	R. MICHNOFF	11/01/01
SUPVR. APPROVAL		

NEXT ASSEMBLY

BROOKHAVEN NATIONAL LABORATORY
UPTON, N.Y. 11973

RHIC CONTROLS WIRING DIAGRAM

BLDG. 1004A CHASSIS CFE-4A-ACDIPOLE

V102 DELAY MODULE

SIZE D | DRAWING NUMBER 94028745 | REV. A

MATERIAL: ——— SCALE: NA WEIGHT: – SHEET 48 OF X

*AUTOCAD