RHIC Accelerator Controls Section
Bldg. 1007W Wiring Diagrams
BNL Drawing Number 94028716

Brookhaven National Laboratory, Upton, New York 11973

Created By: Ed Koropsak
Last Updated 8/27/98

Power Distribution
🕮 Rack 7B-3 (Sheet 1)

VME Chassis CFE-7W-BLM1 modules
🕮 Front End Computer, V108 Utility Module (Sheet 2)
🕮 BLM Patch Panel (Sheet 3)
🕮 BLM High Voltage Power Supply Control (Sheet 4)
🕮 Digital Outputs (Sheet 5)
🕮 Analog Outputs (Sheet 6)
🕮 MADC System (Sheet 7)
🕮 BLM Controller Module (Sheet 8)
🕮 BLM Analog Module -0 (Sheet 9)
🕮 BLM Analog Module -1 (Sheet 10)
🕮 BLM Analog Module -2 (Sheet 11)
🕮 BLM Analog Module -3 (Sheet 12)
🕮 BLM Analog Module -4 (Sheet 13)
🕮 BLM Analog Module -5 (Sheet 14)

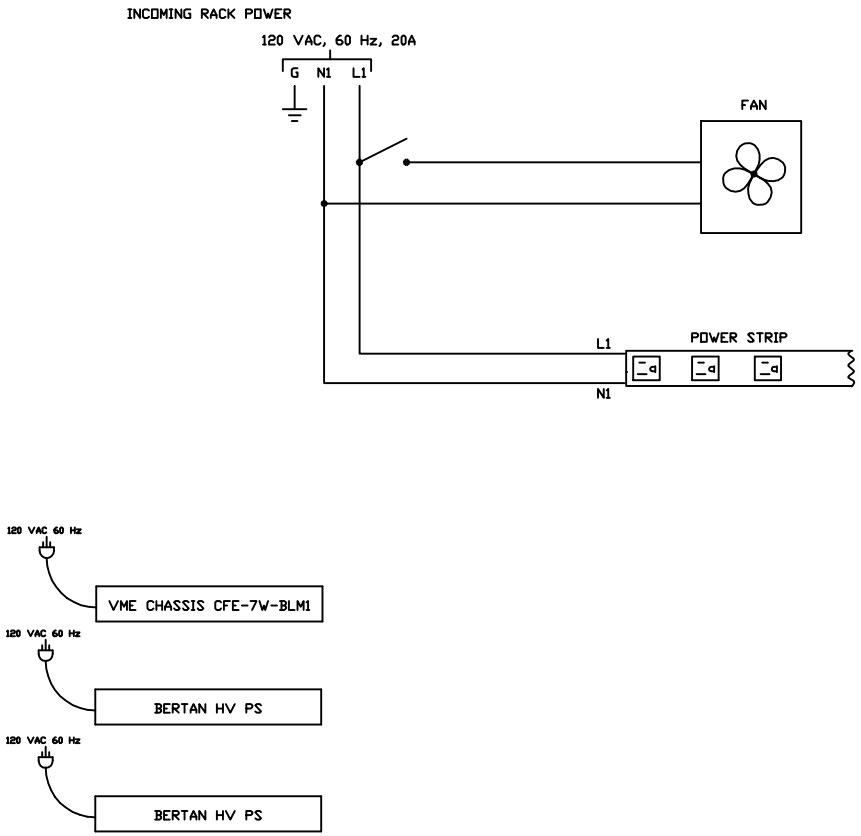

NOTE: ALL 120 VAC, 60 Hz POWER CORDS
PLUG INTO POWER STRIP OUTLETS

RACK 7B-3

QTY REQD -3	QTY REQD -2	QTY REQD -1	REF DESIGNATOR	ITEM NO.	DESCRIPTION	MAT'L DWG NO./SPL NO.
		6		9	V119 LOSS MONITOR ANALOG MODULE TO LOSS MONITOR PATCH PANEL CABLE	94028xxx
		1		8	V118 LOSS MONITOR CONTROLLER MODULE TO PERMIT SYSTEM PANEL CABLE	94028xxx
		4		7	RHIC LOSS MONITOR PATCH PANEL TO MADC V114 CABLE	94028xxx
		1		6	RHIC LOSS MONITOR PATCH PANEL TO 4122 CABLE	94028xxx
		1		5	RHIC LOSS MONITOR PATCH PANEL TO 2170A CABLE	94028xxx
		2		4	RHIC LOSS MONITOR PATCH PANEL TO BERTAN POWER SUPPLY CABLE	94028xxx
		5		3	SERIAL LINK TWINAX CABLE, LENGTH AS REQUIRED	94028176
		1		2	MADC V113 TO V114 P2 INTERFACE RIBBON CABLE	94028218
		1		1	NETWORK CABLE TO FRONT END COMPUTER	

INTERPRET IN GENERAL ACCORDANCE WITH ASME Y14.24M-1989	Q.A. CATEGORY A-3	DATE	BROOKHAVEN NATIONAL LABORATORY UPTON, N.Y. 11973
UNLESS OTHERWISE SPECIFIED DIMENSIONS ARE IN INCHES	DRAWN BY Ed Koropsak	8/19/98	RHIC CONTROLS WIRING DIAGRAM
DECIMAL TOLERANCES .X ±.030 .XX ±.015 .XXX ±.005 ANGULAR TOLERANCE ± .5°	CHECKED BY		SERVICE BLDG. 1007W RACK 7B-3
	DESIGN APPROVAL		POWER DISTRIBUTION
	ENGINEER APPROVAL R. MICHNOFF	8/19/98	SIZE D — DRAWING NUMBER 94028716 — REV. A
OUTSTANDING ECN — NA FINISH — BREAK SHARP EDGES MAX. XX MIN. XX	SUPVR. APPROVAL		MATERIAL: — SCALE: NA WEIGHT: – SHEET 1 OF 14

NEXT ASSEMBLY

*AUTOCAD

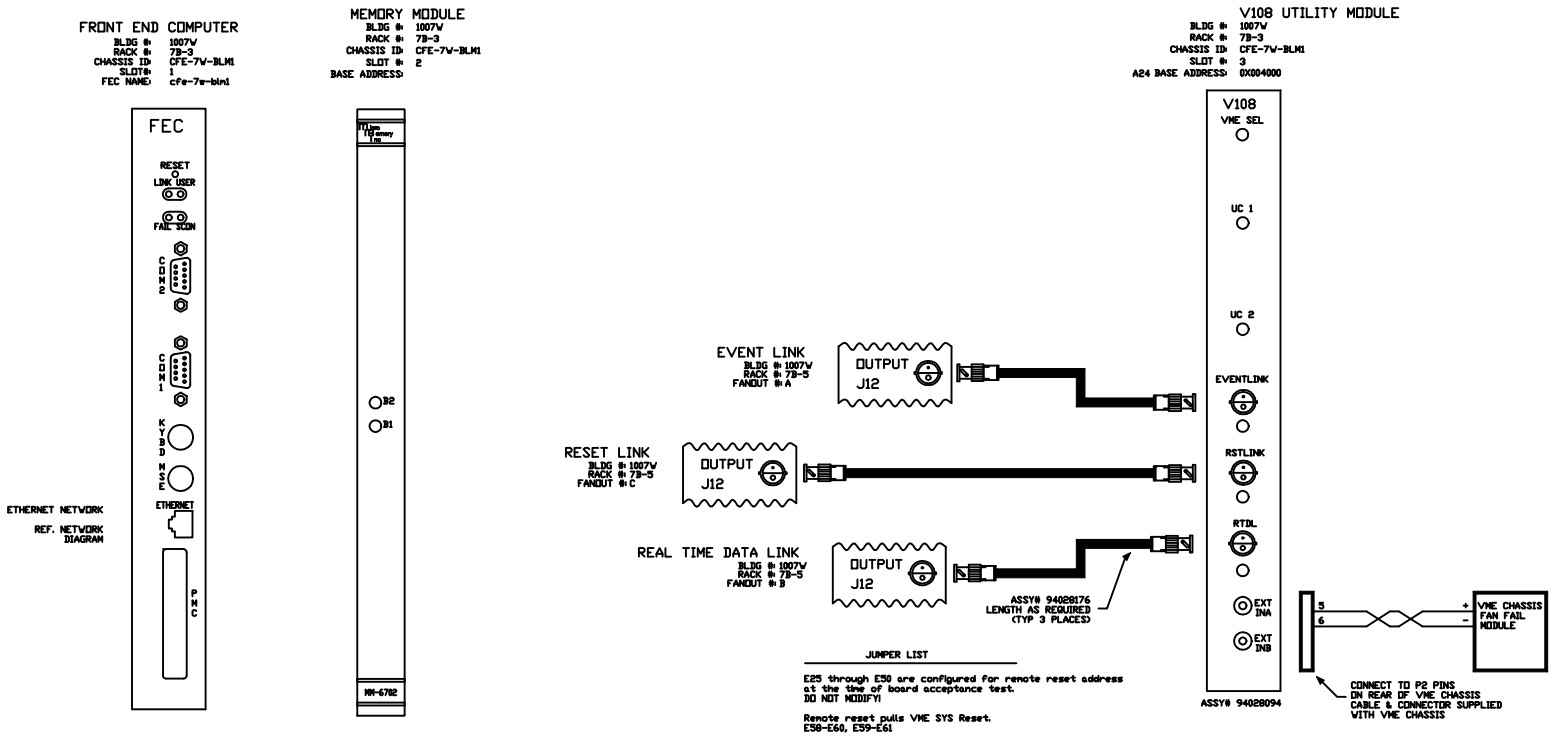

JUMPER LIST

E25 through E50 are configured for remote reset address at the time of board acceptance test.
DO NOT MODIFY!

Remote reset pulls VME SYS Reset.
E58-E60, E59-E61

A24 BASE ADDRESS= 4000h
E1-E13, E2-E14, E3-E15, E4-E16, E5-E17, E6-E18
E7-E19, E8-E20, E9-E21, E10-E22, E11-E24, E57-E23
SW1=OPEN
SW2=CLOSED
SW3=OPEN
SW4=OPEN

REV.	ZONE	ECN NO.	DATE	BY	CKR	APP.

INTERPRET IN GENERAL ACCORDANCE WITH ASME Y14.24M-1989	Q.A. CATEGORY A-3			BROOKHAVEN NATIONAL LABORATORY	
UNLESS OTHERWISE SPECIFIED DIMENSIONS ARE IN INCHES	DRAWN BY	Ed Koropsak	8/19/98	UPTON, N.Y. 11973	
DECIMAL TOLERANCES .X ±.030 .XX ±.015 .XXX ±.005 ANGULAR TOLERANCE ± .5°	CHECKED BY			RHIC CONTROLS WIRING DIAGRAM	
	DESIGN APPROVAL			1007W, VME CHASSIS CFE-7W-BLM1	
	ENGINEER APPROVAL	R. MICHNOFF	8/19/98	FT END COMP/V108 UTIL MODULE	
	SUPVR. APPROVAL			SIZE D / 94028716	REV. A
NA FINISH	BREAK SHARP EDGES	NEXT ASSEMBLY		DRAWING NUMBER	
OUTSTANDING ECN	MAX. XX MIN. XX			MATERIAL: — SCALE: NA WEIGHT: —	SHEET 2 OF 14

*AUTOCAD

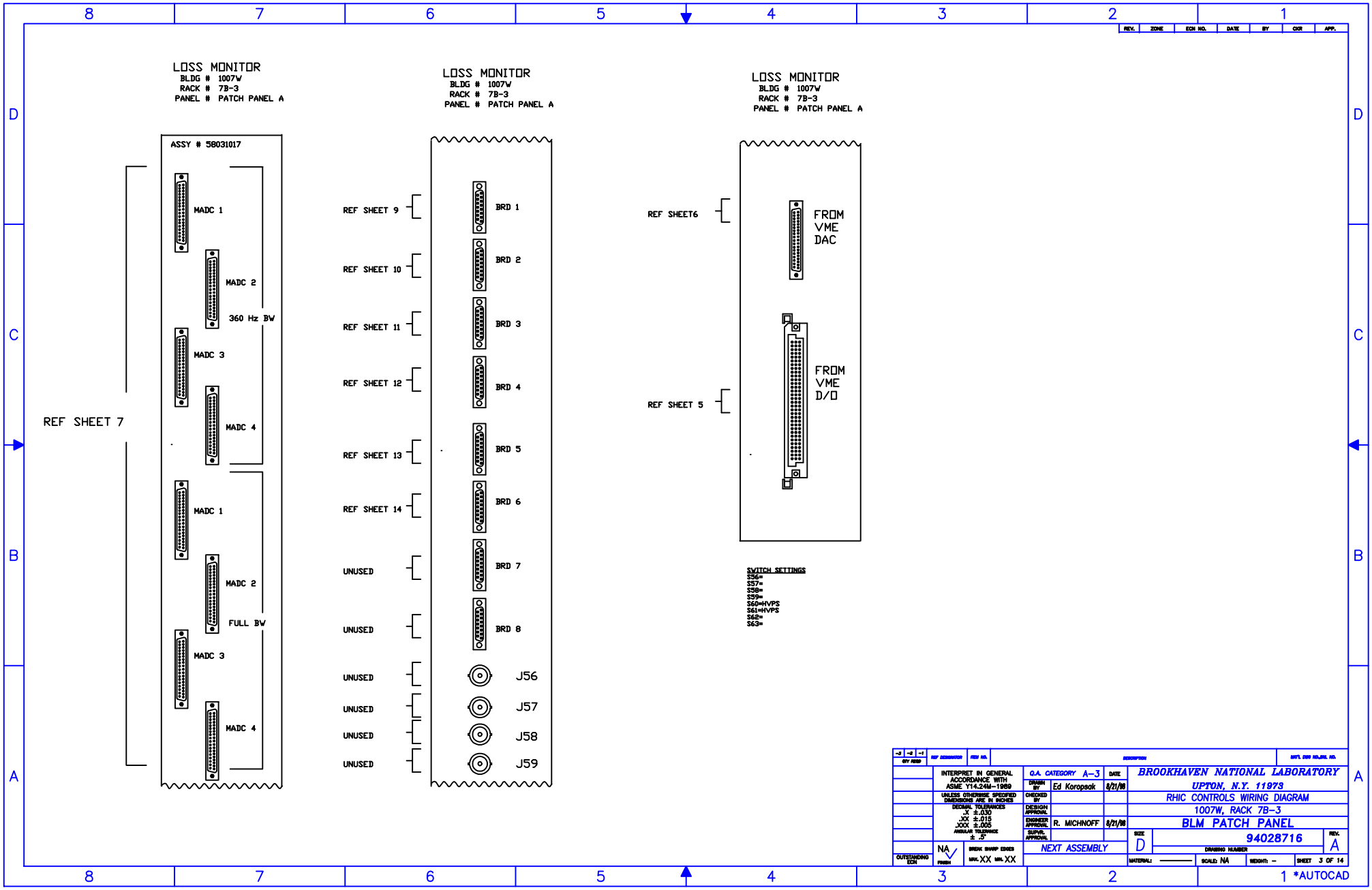

LOSS MONITOR
BLDG # 1007W
RACK # 7B-3
PANEL # PATCH PANEL A
ASSY # 58031017
MADC 1
MADC 2
360 Hz BW
MADC 3
MADC 4
REF SHEET 7
MADC 1
MADC 2
FULL BW
MADC 3
MADC 4
LOSS MONITOR
BLDG # 1007W
RACK # 7B-3
PANEL # PATCH PANEL A
REF SHEET 9
BRD 1
REF SHEET 10
BRD 2
REF SHEET 11
BRD 3
REF SHEET 12
BRD 4
REF SHEET 13
BRD 5
REF SHEET 14
BRD 6
UNUSED
BRD 7
UNUSED
BRD 8
UNUSED
J56
UNUSED
J57
UNUSED
J58
UNUSED
J59
LOSS MONITOR
BLDG # 1007W
RACK # 7B-3
PANEL # PATCH PANEL A
REF SHEET6
FROM VME DAC
REF SHEET 5
FROM VME D/O
SWITCH SETTINGS
S56=
S57=
S58=
S59=
S60=HVPS
S61=HVPS
S62=
S63=
REV. ZONE ECN NO. DATE BY CKR APP.
-3 -2 -1 QTY REQD
REF DESIGNATOR
ITEM NO.
DESCRIPTION
MAT'L DWG NO./SPEC. NO.
INTERPRET IN GENERAL ACCORDANCE WITH ASME Y14.24M-1989
UNLESS OTHERWISE SPECIFIED DIMENSIONS ARE IN INCHES
DECIMAL TOLERANCES .X ±.030 .XX ±.015 .XXX ±.005
ANGULAR TOLERANCE ± .5°
NA
FINISH
BREAK SHARP EDGES MAX. XX MIN. XX
OUTSTANDING ECN
Q.A. CATEGORY A-3
DATE
DRAWN BY Ed Koropsak 8/21/98
CHECKED BY
DESIGN APPROVAL
ENGINEER APPROVAL R. MICHNOFF 8/21/98
SUPVR. APPROVAL
NEXT ASSEMBLY
BROOKHAVEN NATIONAL LABORATORY
UPTON, N.Y. 11973
RHIC CONTROLS WIRING DIAGRAM
1007W, RACK 7B-3
BLM PATCH PANEL
SIZE D
94028716
REV. A
DRAWING NUMBER
MATERIAL:
SCALE: NA
WEIGHT: -
SHEET 3 OF 14
*AUTOCAD

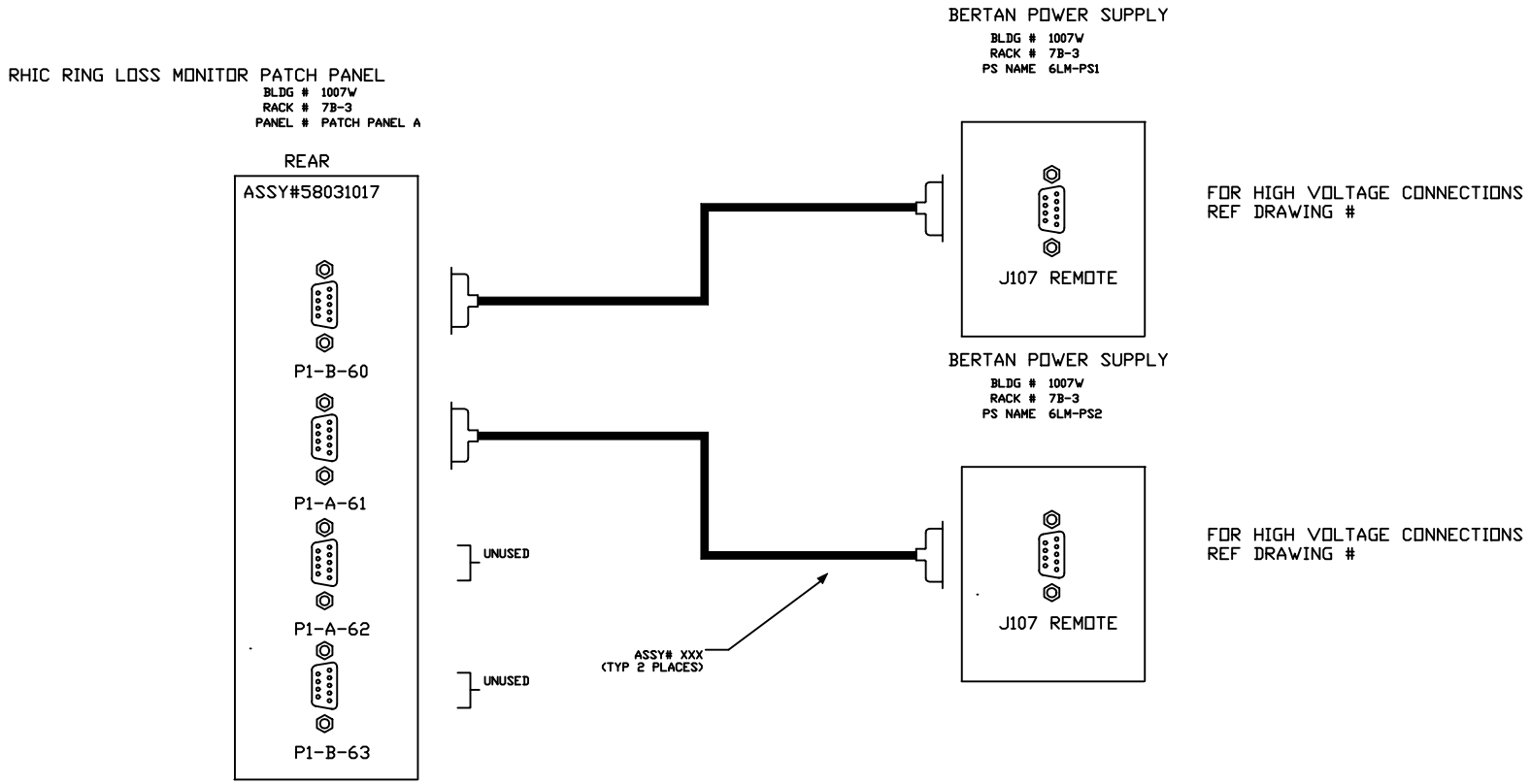

REV.	ZONE	ECN NO.	DATE	BY	CKR	APP.

INTERPRET IN GENERAL ACCORDANCE WITH ASME Y14.24M-1989	Q.A. CATEGORY A-3	DATE	BROOKHAVEN NATIONAL LABORATORY	
UNLESS OTHERWISE SPECIFIED DIMENSIONS ARE IN INCHES	DRAWN BY Ed Koropsak	8/21/98	UPTON, N.Y. 11973	
DECIMAL TOLERANCES .X ±.030 .XX ±.015 .XXX ±.005 ANGULAR TOLERANCE ± .5°	CHECKED BY		RHIC CONTROLS WIRING DIAGRAM	
	DESIGN APPROVAL		1007W, RACK 7B-3	
	ENGINEER APPROVAL R. MICHNOFF	8/21/98	BLM H V POWER SUPPLY CONTROL	
	SUPVR. APPROVAL		SIZE D / DRAWING NUMBER 94028716	REV. A
NA FINISH	BREAK SHARP EDGES MAX. XX MIN. XX		NEXT ASSEMBLY	
OUTSTANDING ECN			MATERIAL: —— SCALE: NA WEIGHT: --	SHEET 4 OF 14

*AUTOCAD

DIGITAL OUTPUT MODULE (LOW CURRENT)

VMIVME 2170A

BLDG #: 1007W
RACK #: 7B-3
CHASSIS ID: CFE-7W-BLM1
SLOT #: 4
A16 BASE ADDRESS: 0xE100

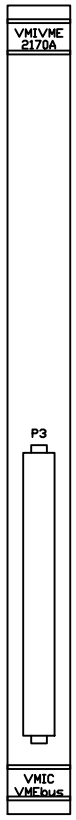

RHIC RING LOSS MONITOR
PATCH PANEL

BLDG # 1007W
RACK # 7B-3
PANEL # A

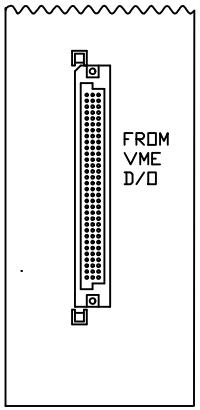

JUMPER SETTINGS

A2:IN
A3:IN
A4:IN
A5:IN
A6:IN
A7:IN
A8:OUT
A9:IN
A10:IN
A11:IN
A12:IN
A13:OUT
A14:OUT
A15:OUT

REV.	ZONE	ECN NO.	DATE	BY	CKR	APP.

-3 -2 -1 QTY REQD	REF DESIGNATOR	ITEM NO.	DESCRIPTION	MAT'L DWG NO./INL NO.

INTERPRET IN GENERAL ACCORDANCE WITH ASME Y14.24M-1989

UNLESS OTHERWISE SPECIFIED DIMENSIONS ARE IN INCHES

DECIMAL TOLERANCES
.X ±.030
.XX ±.015
.XXX ±.005
ANGULAR TOLERANCE ± .5°

NA FINISH

BREAK SHARP EDGES MAX. XX MIN. XX

OUTSTANDING ECN

Q.A. CATEGORY A-3		DATE
DRAWN BY	Ed Koropsak	8/21/98
CHECKED BY		
DESIGN APPROVAL		
ENGINEER APPROVAL	R. MICHNOFF	8/21/98
SUPVR. APPROVAL		

NEXT ASSEMBLY

BROOKHAVEN NATIONAL LABORATORY
UPTON, N.Y. 11973

RHIC CONTROLS WIRING DIAGRAM
1007W, VME CHASSIS CFE-7W-BLM1
DIGITAL OUTPUTS

SIZE D | DRAWING NUMBER 94028716 | REV. A

MATERIAL: ——— | SCALE: NA | WEIGHT: – | SHEET 5 OF 14

*AUTOCAD

VMIVME 4122 (8 CHAN., 12 BIT ANALOG OUTPUT MODULE

BLDG #: 1007W
RACK #: 7B-3
CHASSIS ID: CFE-7W-BLM1
SLOT #: 5
A16 BASE ADDRESS: 0x0200
CONFIGURATION: 0 TO +5 VOLTS

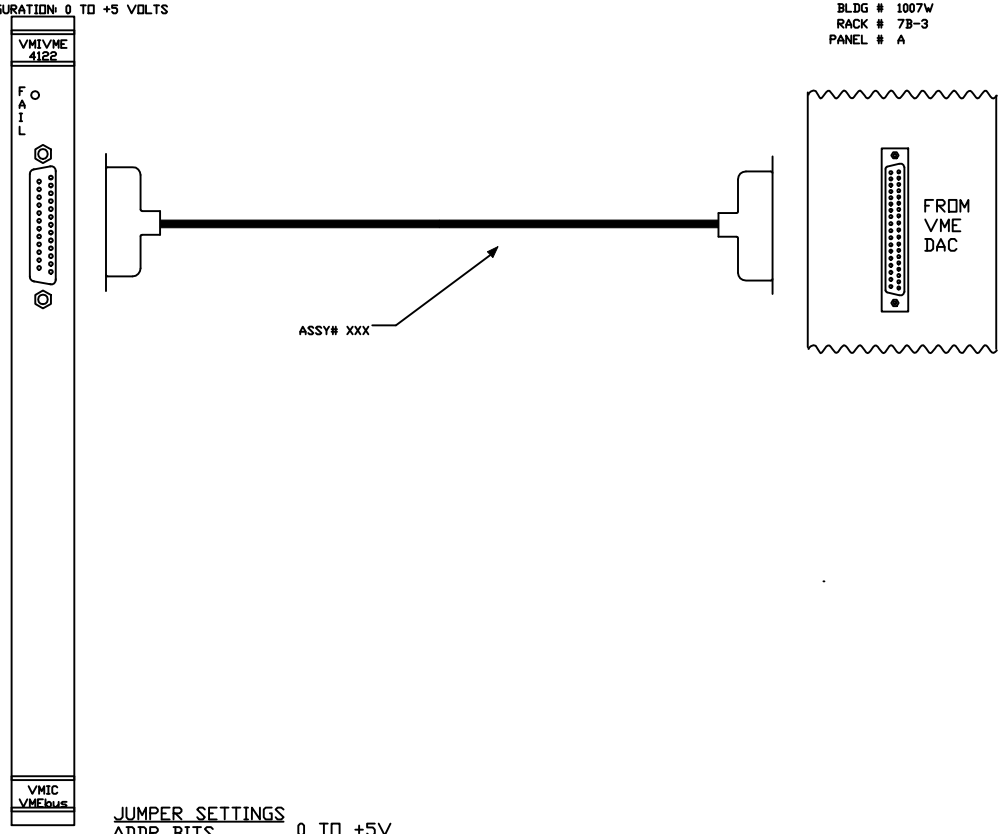

RHIC RING LOSS MONITOR
PATCH PANEL

BLDG # 1007W
RACK # 7B-3
PANEL # A

JUMPER SETTINGS

ADDR BITS	0 TO +5V
E11 (A7): IN	E1: 2-3
E12 (A8): IN	E3: 1-2
E13 (A9): OUT	E4: IN
E14 (A10): IN	E5: OUT
E15 (A11): IN	E6: 1-2
E16 (A12): IN	E7: 1-2
E17 (A13): IN	E8: 2-3
E18 (A14): IN	E9: OUT
E19 (A15): IN	E10: OUT

NOTE: PIN 1 OF JUMPERS IS DESIGNATED BY A SQUARE PAD ON THE SOLDER SIDE OF THE BOARD

REV.	ZONE	ECN NO.	DATE	BY	CKR	APP.

INTERPRET IN GENERAL ACCORDANCE WITH ASME Y14.24M-1989	Q.A. CATEGORY A-3	DATE	BROOKHAVEN NATIONAL LABORATORY	
	DRAWN BY Ed Koropsak	8/21/98	UPTON, N.Y. 11973	
UNLESS OTHERWISE SPECIFIED DIMENSIONS ARE IN INCHES	CHECKED BY		RHIC CONTROLS WIRING DIAGRAM	
DECIMAL TOLERANCES .X ±.030 .XX ±.015 .XXX ±.005 ANGULAR TOLERANCE ± .5°	DESIGN APPROVAL		1007W, VME CHASSIS CFE-7W-BLM1	
	ENGINEER APPROVAL R. MICHNOFF	8/21/98	ANALOG OUTPUTS	
	SUPVR. APPROVAL		SIZE D — 94028716 — REV. A	
NA FINISH	BREAK SHARP EDGES MAX. XX MIN. XX	NEXT ASSEMBLY	DRAWING NUMBER	
OUTSTANDING ECN			MATERIAL: —— SCALE: NA WEIGHT: -- SHEET 6 OF 14	

*AUTOCAD

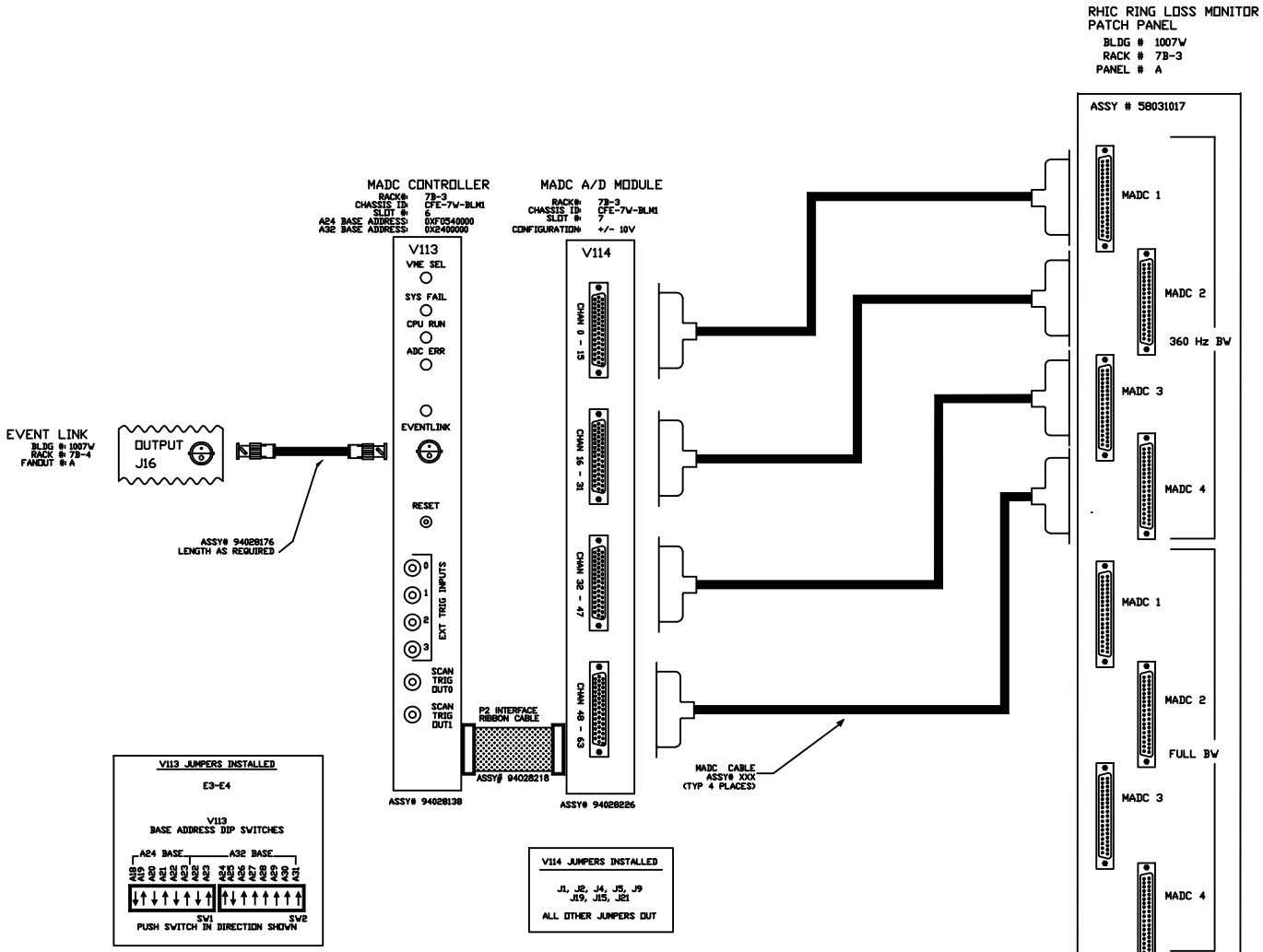

NOTE: SECOND SET OF MADC CONNECTIONS ON PATCH PANEL MAY OPTIONALLY BE USED TO PROVIDE FULL BANDWIDTH.

REV.	ZONE	ECN NO.	DATE	BY	CKR	APP.

INTERPRET IN GENERAL ACCORDANCE WITH ASME Y14.24M-1989	Q.A. CATEGORY A-3	DATE	BROOKHAVEN NATIONAL LABORATORY ASSOCIATED UNIVERSITIES, INC. UPTON, N.Y. 11973	
UNLESS OTHERWISE SPECIFIED DIMENSIONS ARE IN INCHES	DRAWN BY Ed Koropsak	8/21/98	RHIC CONTROLS WIRING DIAGRAM	
DECIMAL TOLERANCES .X ±.030 .XX ±.015 .XXX ±.005 ANGULAR TOLERANCE ± .5°	CHECKED BY / DESIGN APPROVAL		BLDG. 1007W, VME CHASSIS CFE-7W-BLM1	
	ENGINEER APPROVAL R. MICHNOFF	8/21/98	MADC SYSTEM	
	SUPVR. APPROVAL		SIZE D / DRAWING NUMBER 94028716	REV. A
OUTSTANDING ECN	NA FINISH	BREAK SHARP EDGES MAX. XX MIN. XX	NEXT ASSEMBLY	MATERIAL: —— SCALE: FULL WEIGHT: -- SHEET 7 OF 14

*AUTOCAD

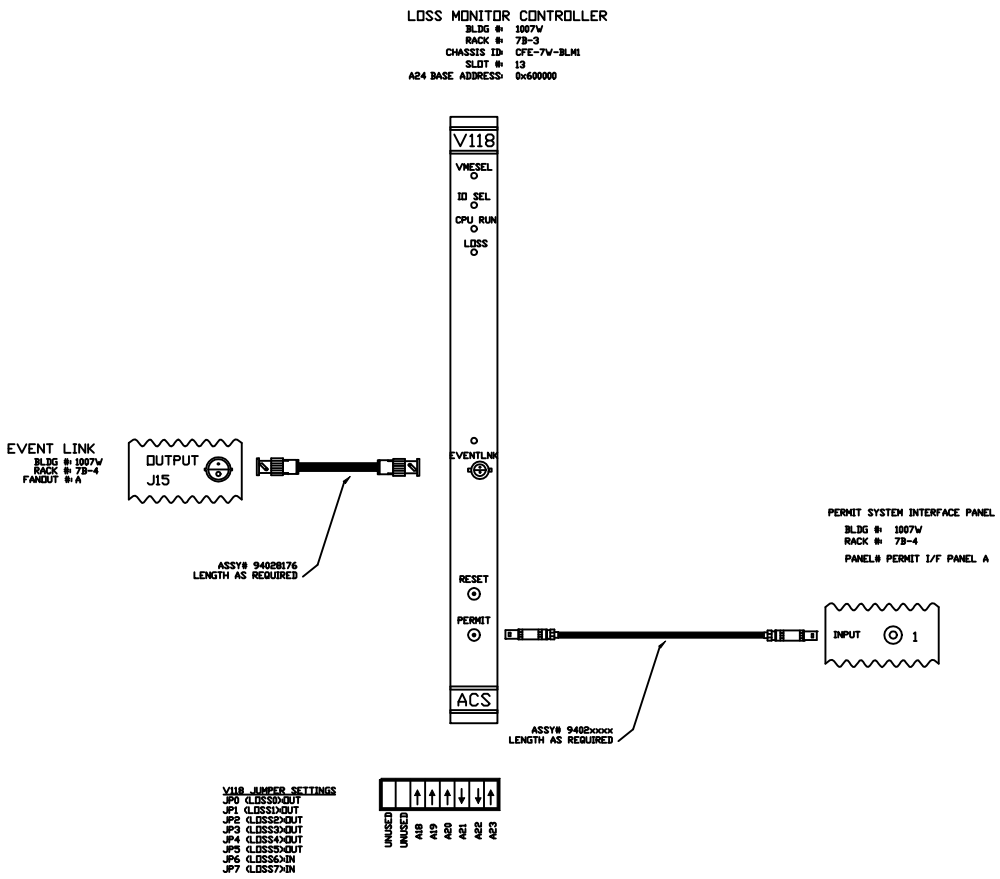

REV.	ZONE	ECN NO.	DATE	BY	CKR	APP.

-3	-2	-1	REF DESIGNATOR	REV NO.	DESCRIPTION	MAT'L DWG NO./BNL NO.
QTY REQD						

INTERPRET IN GENERAL ACCORDANCE WITH ASME Y14.24M-1989

UNLESS OTHERWISE SPECIFIED DIMENSIONS ARE IN INCHES

DECIMAL TOLERANCES
.X ±.030
.XX ±.015
.XXX ±.005
ANGULAR TOLERANCE ± .5°

OUTSTANDING ECN

NA FINISH

BREAK SHARP EDGES MAX. XX MIN. XX

Q.A. CATEGORY A-3		DATE
DRAWN BY	Ed Koropsak	8/21/98
CHECKED BY		
DESIGN APPROVAL		
ENGINEER APPROVAL	R. MICHNOFF	8/21/98
SUPVR. APPROVAL		

NEXT ASSEMBLY

BROOKHAVEN NATIONAL LABORATORY
ASSOCIATED UNIVERSITIES, INC.
UPTON, N.Y. 11973

RHIC CONTROLS WIRING DIAGRAM

BLDG. 1007W, VME CHASSIS CFE-7W-BLM1

BLM CONTROLLER MODULE

SIZE D | DRAWING NUMBER 94028716 | REV. A

MATERIAL: —— | SCALE: FULL | WEIGHT: – | SHEET 8 OF 14

*AUTOCAD

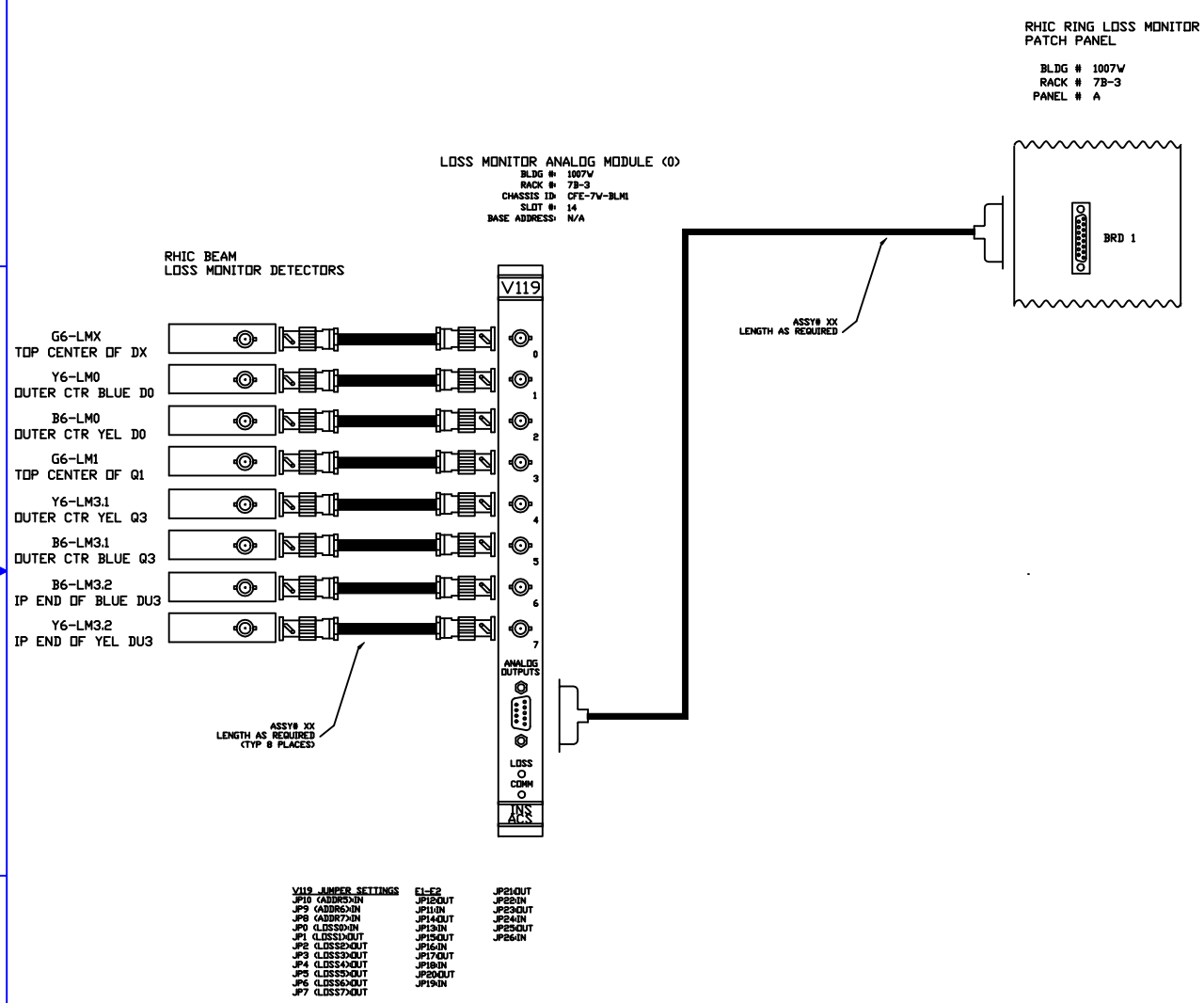

REV.	ZONE	ECN NO.	DATE	BY	CKR	APP.

-3	-2	-1	REF DESIGNATOR	REV NO.	DESCRIPTION	MAT'L DWG NO./SIZE NO.
QTY REQD						

INTERPRET IN GENERAL ACCORDANCE WITH ASME Y14.24M-1989

UNLESS OTHERWISE SPECIFIED DIMENSIONS ARE IN INCHES

DECIMAL TOLERANCES
.X ±.030
.XX ±.015
.XXX ±.005
ANGULAR TOLERANCE ± .5°

OUTSTANDING ECN

NA FINISH

BREAK SHARP EDGES MAX. XX MIN. XX

Q.A. CATEGORY A-3		DATE
DRAWN BY	Ed Koropsak	8/21/98
CHECKED BY		
DESIGN APPROVAL		
ENGINEER APPROVAL	R. MICHNOFF	8/21/98
SUPVR. APPROVAL		

NEXT ASSEMBLY

BROOKHAVEN NATIONAL LABORATORY
ASSOCIATED UNIVERSITIES, INC.
UPTON, N.Y. 11973

RHIC CONTROLS WIRING DIAGRAM

BLDG. 1007W, VME CHASSIS CFE-7W-BLM1

BLM ANALOG MODULE

SIZE D | DRAWING NUMBER 94028716 | REV. A

MATERIAL: ——— | SCALE: FULL | WEIGHT: – | SHEET 9 OF 14

*AUTOCAD

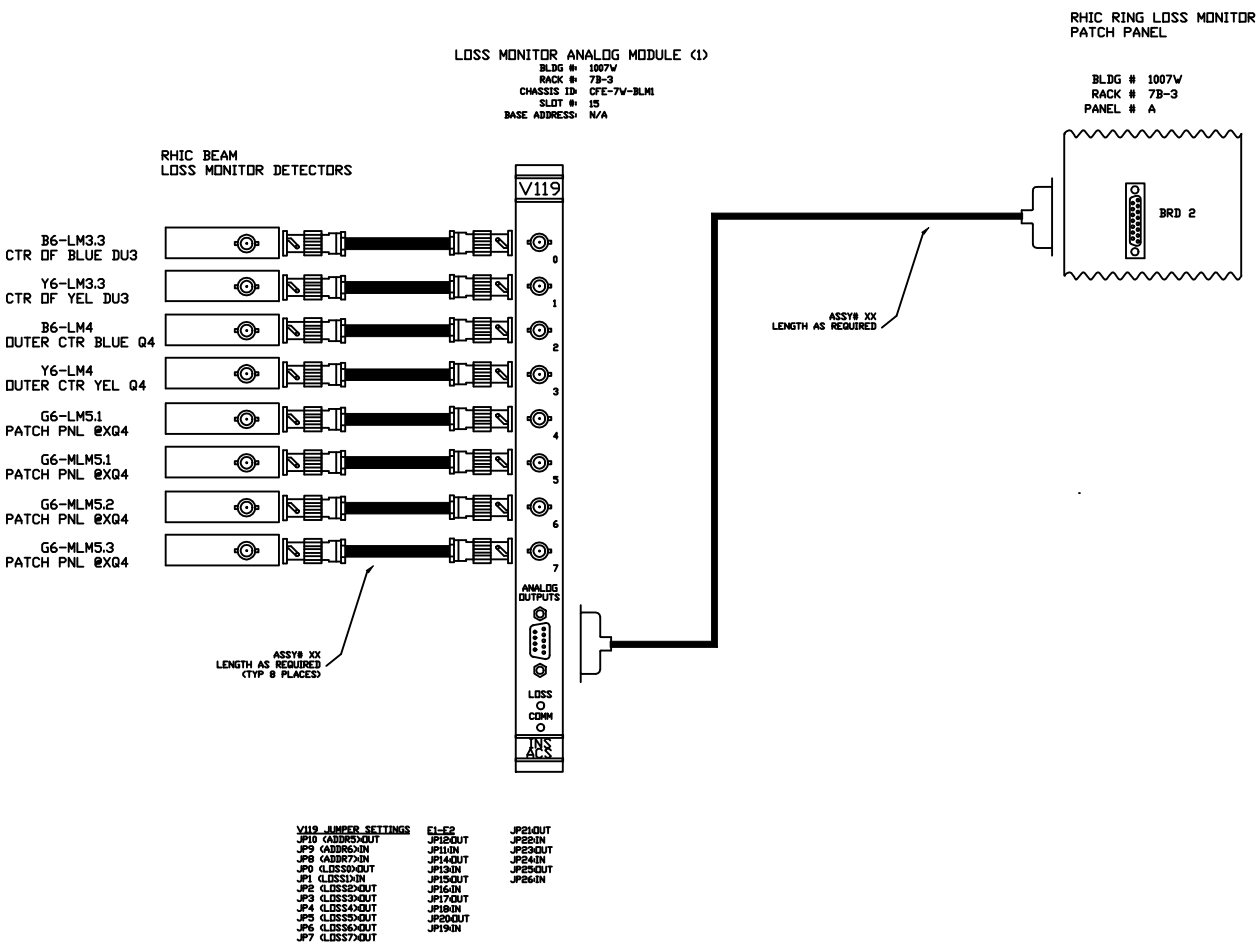

REV.	ZONE	ECN NO.	DATE	BY	CKR	APP.

-3	-2	-1	REF DESIGNATOR	REV NO.	DESCRIPTION	MAT'L DWG NO./SIZE NO.
QTY REQD						

INTERPRET IN GENERAL ACCORDANCE WITH ASME Y14.24M-1989

UNLESS OTHERWISE SPECIFIED DIMENSIONS ARE IN INCHES

DECIMAL TOLERANCES
.X ±.030
.XX ±.015
.XXX ±.005
ANGULAR TOLERANCE ± .5°

NA FINISH

BREAK SHARP EDGES MAX. XX MIN. XX

OUTSTANDING ECN

Q.A. CATEGORY A-3		DATE
DRAWN BY	Ed Koropsak	8/21/98
CHECKED BY		
DESIGN APPROVAL		
ENGINEER APPROVAL	R. MICHNOFF	8/21/98
SUPVR. APPROVAL		

NEXT ASSEMBLY

BROOKHAVEN NATIONAL LABORATORY
ASSOCIATED UNIVERSITIES, INC.
UPTON, N.Y. 11973

RHIC CONTROLS WIRING DIAGRAM

BLDG. 1007W, VME CHASSIS CFE-7W-BLM1

BLM ANALOG MODULE

SIZE D | DRAWING NUMBER 94028716 | REV. A

MATERIAL: ——— | SCALE: FULL | WEIGHT: – | SHEET 10 OF 14

*AUTOCAD

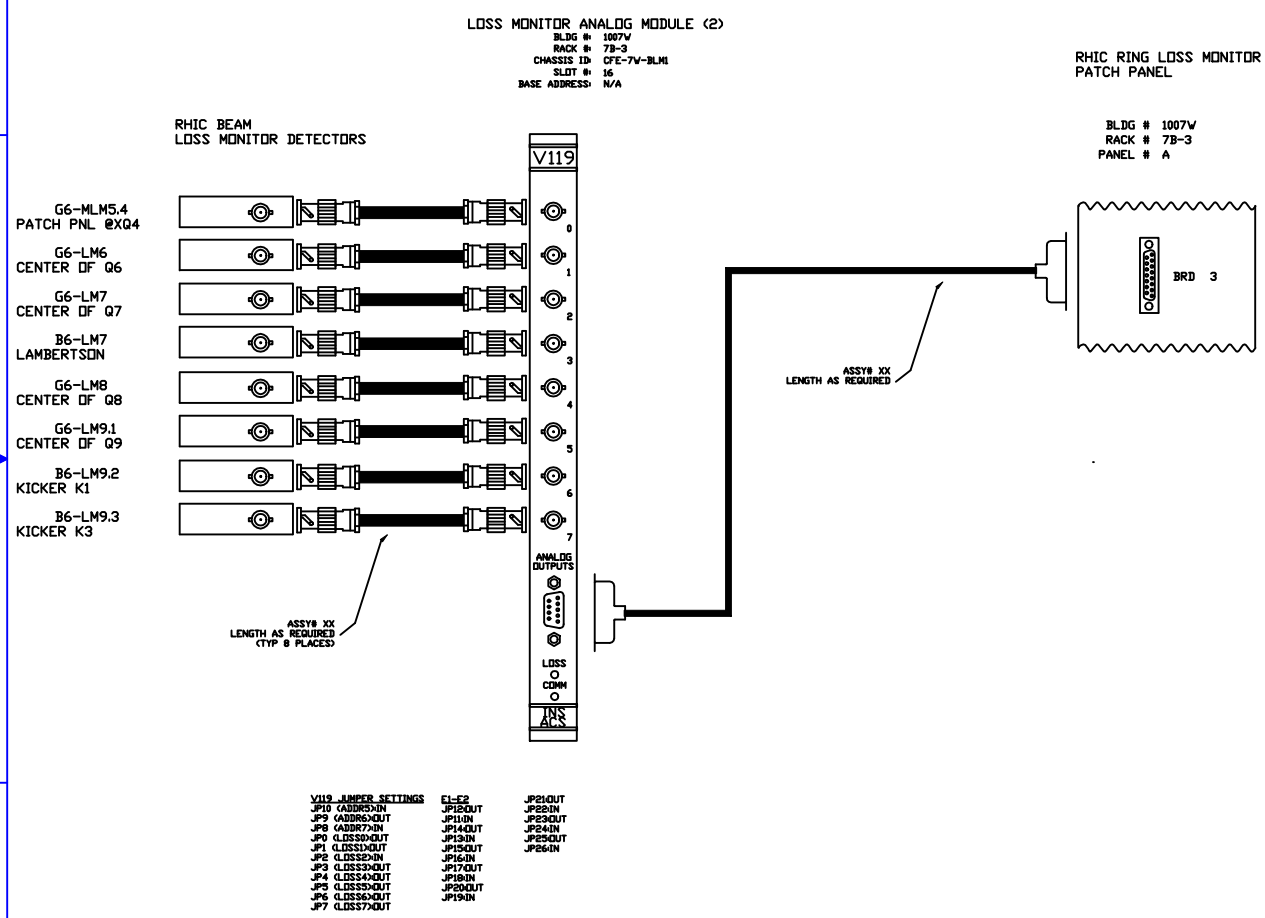

REV.	ZONE	ECN NO.	DATE	BY	CKR	APP.

-3	-2	-1	REF DESIGNATOR	REV NO.	DESCRIPTION	MAT'L DWG NO./SIZE NO.
QTY REQD						

INTERPRET IN GENERAL ACCORDANCE WITH ASME Y14.24M-1989

UNLESS OTHERWISE SPECIFIED DIMENSIONS ARE IN INCHES

DECIMAL TOLERANCES
.X ±.030
.XX ±.015
.XXX ±.005
ANGULAR TOLERANCE ± .5°

NA FINISH

BREAK SHARP EDGES MAX. XX MIN. XX

OUTSTANDING ECN

		DATE
Q.A. CATEGORY A-3		
DRAWN BY	Ed Koropsak	8/21/98
CHECKED BY		
DESIGN APPROVAL		
ENGINEER APPROVAL	R. MICHNOFF	8/21/98
SUPVR. APPROVAL		

NEXT ASSEMBLY

BROOKHAVEN NATIONAL LABORATORY
ASSOCIATED UNIVERSITIES, INC.
UPTON, N.Y. 11973

RHIC CONTROLS WIRING DIAGRAM

BLDG. 1007W, VME CHASSIS CFE-7W-BLM1

BLM ANALOG MODULE

SIZE D | DRAWING NUMBER 94028716 | REV. A

MATERIAL: ——— | SCALE: FULL | WEIGHT: – | SHEET 11 OF 14

*AUTOCAD

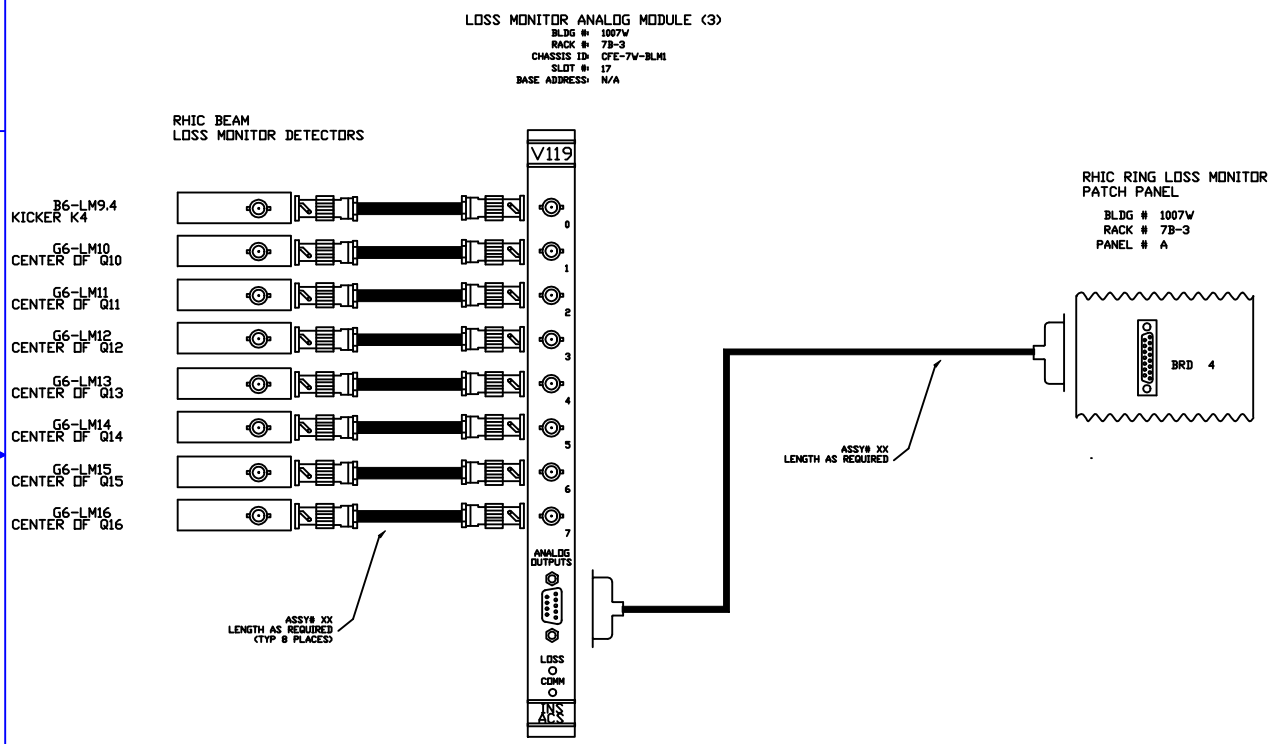

V119 JUMPER SETTINGS	E1-E2	
JP10 (ADDR5)OUT	JP12OUT	JP21OUT
JP9 (ADDR6)OUT	JP11IN	JP22IN
JP8 (ADDR7)IN	JP14OUT	JP23OUT
JP0 (LOSS0)OUT	JP13IN	JP24IN
JP1 (LOSS1)OUT	JP15OUT	JP25OUT
JP2 (LOSS2)OUT	JP16IN	JP26IN
JP3 (LOSS3)IN	JP17OUT	
JP4 (LOSS4)OUT	JP18IN	
JP5 (LOSS5)OUT	JP20OUT	
JP6 (LOSS6)OUT	JP19IN	
JP7 (LOSS7)OUT		

REV.	ZONE	ECN NO.	DATE	BY	CKR	APP.

QTY REQD	REF DESIGNATOR	REV NO.	DESCRIPTION	MAT'L DWG NO./SIZE NO.

INTERPRET IN GENERAL ACCORDANCE WITH ASME Y14.24M-1989

UNLESS OTHERWISE SPECIFIED DIMENSIONS ARE IN INCHES

DECIMAL TOLERANCES
.X ±.030
.XX ±.015
.XXX ±.005
ANGULAR TOLERANCE ± .5°

NA FINISH

BREAK SHARP EDGES MAX. XX MIN. XX

OUTSTANDING ECN

Q.A. CATEGORY A-3		DATE
DRAWN BY	Ed Koropsak	8/21/98
CHECKED BY		
DESIGN APPROVAL		
ENGINEER APPROVAL	R. MICHNOFF	8/21/98
SUPVR. APPROVAL		

NEXT ASSEMBLY

BROOKHAVEN NATIONAL LABORATORY
ASSOCIATED UNIVERSITIES, INC.
UPTON, N.Y. 11973

RHIC CONTROLS WIRING DIAGRAM

BLDG. 1007W, VME CHASSIS CFE-7W-BLM1

BLM ANALOG MODULE

SIZE D | DRAWING NUMBER 94028716 | REV. A

MATERIAL: ——— | SCALE: FULL | WEIGHT: – | SHEET 12 OF 14

*AUTOCAD

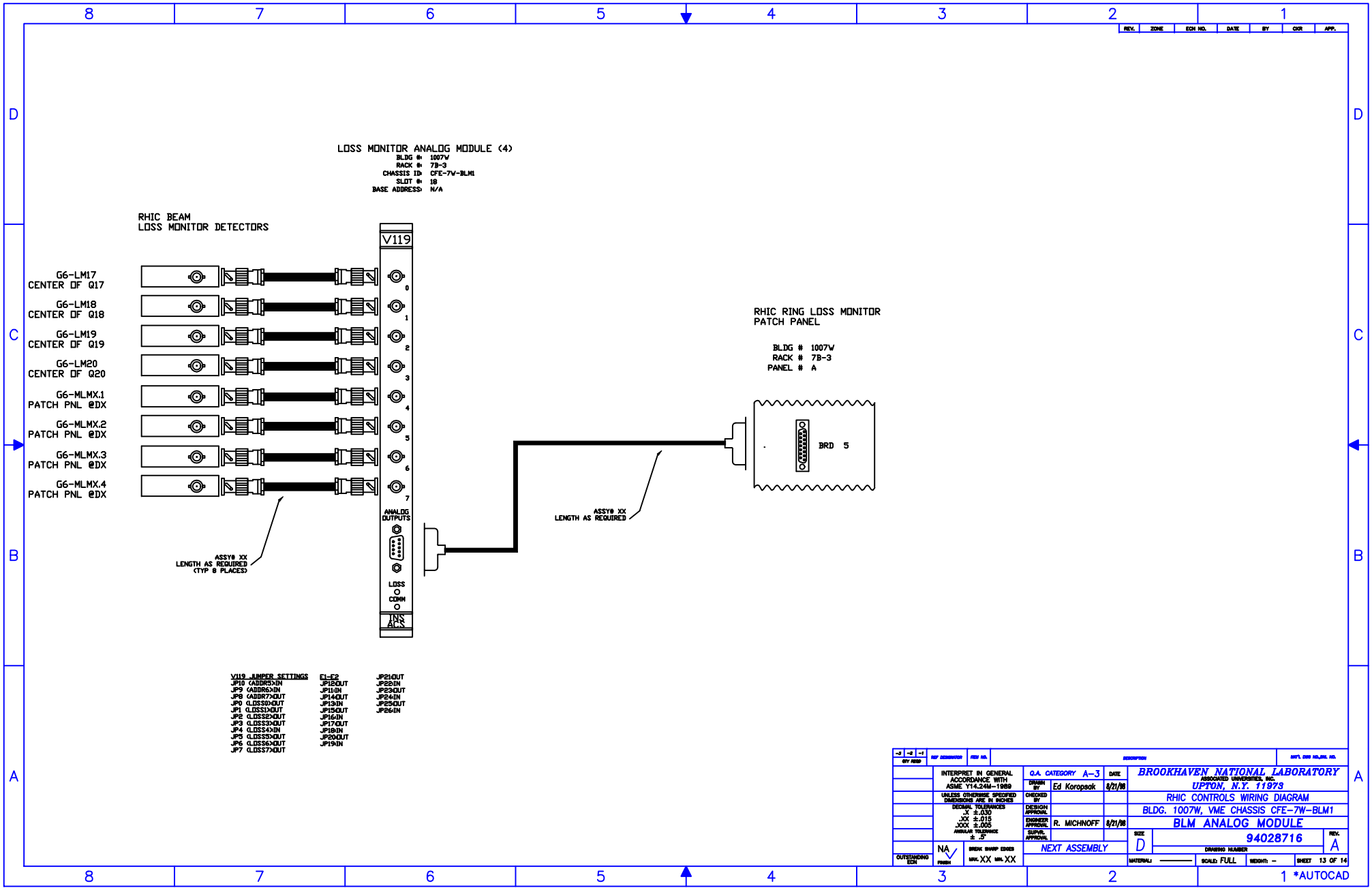
LOSS MONITOR ANALOG MODULE (4)
BLDG #: 1007W
RACK #: 7B-3
CHASSIS ID: CFE-7W-BLM1
SLOT #: 18
BASE ADDRESS: N/A
RHIC BEAM
LOSS MONITOR DETECTORS
V119
G6-LM17
CENTER OF Q17
G6-LM18
CENTER OF Q18
G6-LM19
CENTER OF Q19
G6-LM20
CENTER OF Q20
G6-MLMX.1
PATCH PNL @DX
G6-MLMX.2
PATCH PNL @DX
G6-MLMX.3
PATCH PNL @DX
G6-MLMX.4
PATCH PNL @DX
0
1
2
3
4
5
6
7
ANALOG OUTPUTS
LOSS
COMM
INS
ACS
ASSY# XX
LENGTH AS REQUIRED
(TYP 8 PLACES)
ASSY# XX
LENGTH AS REQUIRED
RHIC RING LOSS MONITOR
PATCH PANEL
BLDG # 1007W
RACK # 7B-3
PANEL # A
BRD 5
V119 JUMPER SETTINGS
JP10 (ADDR5)IN
JP9 (ADDR6)IN
JP8 (ADDR7)OUT
JP0 (LOSS0)OUT
JP1 (LOSS1)OUT
JP2 (LOSS2)OUT
JP3 (LOSS3)OUT
JP4 (LOSS4)IN
JP5 (LOSS5)OUT
JP6 (LOSS6)OUT
JP7 (LOSS7)OUT
E1-E2
JP12OUT
JP11IN
JP14OUT
JP13IN
JP15OUT
JP16IN
JP17OUT
JP18IN
JP20OUT
JP19IN
JP21OUT
JP22IN
JP23OUT
JP24IN
JP25OUT
JP26IN
REV. ZONE ECN NO. DATE BY CKR APP.
-3 -2 -1
QTY REQD
REF DESIGNATOR
ITEM NO.
DESCRIPTION
MAT'L DWG NO./SPL NO.
INTERPRET IN GENERAL ACCORDANCE WITH ASME Y14.24M-1989
UNLESS OTHERWISE SPECIFIED DIMENSIONS ARE IN INCHES
DECIMAL TOLERANCES
.X ±.030
.XX ±.015
.XXX ±.005
ANGULAR TOLERANCE
± .5°
NA
FINISH
BREAK SHARP EDGES
MAX. XX MIN. XX
OUTSTANDING ECN
Q.A. CATEGORY A-3
DATE
DRAWN BY Ed Koropsak 8/21/98
CHECKED BY
DESIGN APPROVAL
ENGINEER APPROVAL R. MICHNOFF 8/21/98
SUPVR. APPROVAL
NEXT ASSEMBLY
BROOKHAVEN NATIONAL LABORATORY
ASSOCIATED UNIVERSITIES, INC.
UPTON, N.Y. 11973
RHIC CONTROLS WIRING DIAGRAM
BLDG. 1007W, VME CHASSIS CFE-7W-BLM1
BLM ANALOG MODULE
SIZE D
94028716
REV. A
DRAWING NUMBER
MATERIAL:
SCALE: FULL
WEIGHT: -
SHEET 13 OF 14
*AUTOCAD

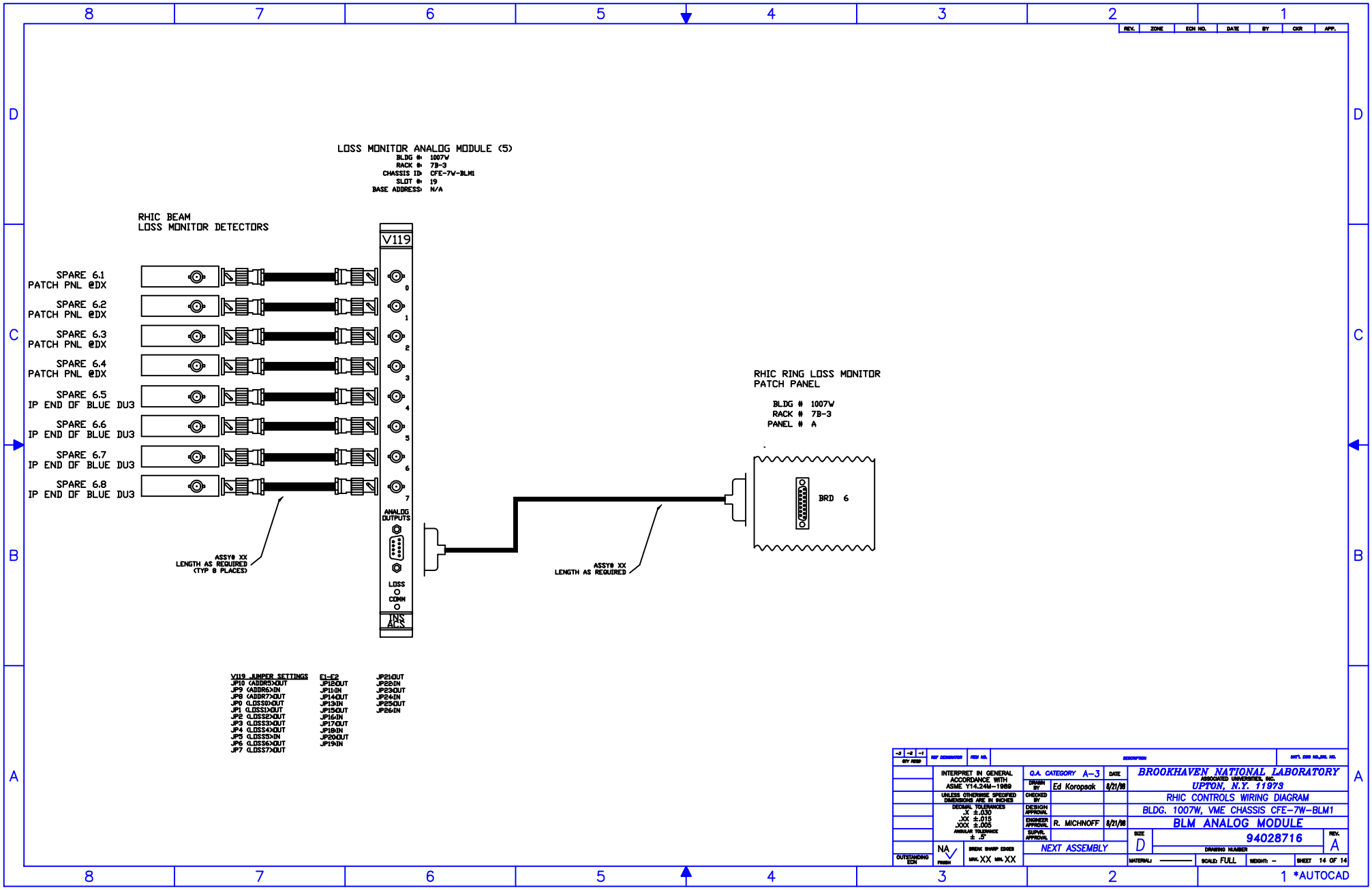
LOSS MONITOR ANALOG MODULE (5)
BLDG #: 1007W
RACK #: 7B-3
CHASSIS ID: CFE-7W-BLM1
SLOT #: 19
BASE ADDRESS: N/A
RHIC BEAM
LOSS MONITOR DETECTORS
V119
SPARE 6.1
PATCH PNL @DX
SPARE 6.2
PATCH PNL @DX
SPARE 6.3
PATCH PNL @DX
SPARE 6.4
PATCH PNL @DX
SPARE 6.5
IP END OF BLUE DU3
SPARE 6.6
IP END OF BLUE DU3
SPARE 6.7
IP END OF BLUE DU3
SPARE 6.8
IP END OF BLUE DU3
0
1
2
3
4
5
6
7
ANALOG OUTPUTS
LOSS
COMM
INS
ACS
ASSY# XX
LENGTH AS REQUIRED
(TYP 8 PLACES)
RHIC RING LOSS MONITOR
PATCH PANEL
BLDG # 1007W
RACK # 7B-3
PANEL # A
BRD 6
ASSY# XX
LENGTH AS REQUIRED
V119 JUMPER SETTINGS
JP10 (ADDR5)OUT
JP9 (ADDR6)IN
JP8 (ADDR7)OUT
JP0 (LOSS0)OUT
JP1 (LOSS1)OUT
JP2 (LOSS2)OUT
JP3 (LOSS3)OUT
JP4 (LOSS4)OUT
JP5 (LOSS5)IN
JP6 (LOSS6)OUT
JP7 (LOSS7)OUT
E1-E2
JP12OUT
JP11IN
JP14OUT
JP13IN
JP15OUT
JP16IN
JP17OUT
JP18IN
JP20OUT
JP19IN
JP21OUT
JP22IN
JP23OUT
JP24IN
JP25OUT
JP26IN
REV. ZONE ECN NO. DATE BY CKR APP.
-3 -2 -1
QTY REQD
REF DESIGNATOR
ITEM NO.
DESCRIPTION
MAT'L DWG NO./SIZE NO.
INTERPRET IN GENERAL ACCORDANCE WITH ASME Y14.24M-1989
UNLESS OTHERWISE SPECIFIED DIMENSIONS ARE IN INCHES
DECIMAL TOLERANCES
.X ±.030
.XX ±.015
.XXX ±.005
ANGULAR TOLERANCE
± .5°
NA
FINISH
BREAK SHARP EDGES
MAX. XX MIN. XX
OUTSTANDING ECN
Q.A. CATEGORY A-3
DATE
DRAWN BY Ed Koropsak 8/21/98
CHECKED BY
DESIGN APPROVAL
ENGINEER APPROVAL R. MICHNOFF 8/21/98
SUPVR. APPROVAL
NEXT ASSEMBLY
BROOKHAVEN NATIONAL LABORATORY
ASSOCIATED UNIVERSITIES, INC.
UPTON, N.Y. 11973
RHIC CONTROLS WIRING DIAGRAM
BLDG. 1007W, VME CHASSIS CFE-7W-BLM1
BLM ANALOG MODULE
SIZE D
94028716
REV. A
DRAWING NUMBER
MATERIAL:
SCALE: FULL
WEIGHT: -
SHEET 14 OF 14
*AUTOCAD