RHIC Accelerator Controls Section
Alcove 1009B Wiring Diagrams
BNL Drawing Number 94028698

Brookhaven National Laboratory, Upton, New York 11973

Created By: Ed Koropsak
Last Updated 6/17/03

Power Distribution
- 🕮 Rack R09B08 (Sheet 1)
- 🕮 Rack R09B09, Rack R09B10 (Sheet 2)

Spares
- 🕮 Spare Fiber Optic Receiver/Transmitter Channels (Sheet 3)
- 🕮 Spare MADC Channels (Sheet 38)

Serial Links
- 🕮 Event Link (Sheet 4,5)
- 🕮 Real Time Data Link (RTDL) (Sheet 6,7)
- 🕮 Reset Link (Sheet 8)
- 🕮 Beam Sync Yellow Link (Sheet 9)
- 🕮 Beam Sync Blue Link (Sheet 10)

VME Chassis CFE-9B-PS1 modules
- 🕮 CPU, Memory Board, V108 Utility Module (Sheet 11)
- 🕮 V113/V114 MADC System (Sheet 12)
- 🕮 V115 WFG A: bi9-th19, bi9-tv20 (Sheet 13)
- 🕮 V115 WFG B: bi9-th21, bi8-tv20 (Sheet 14)
- 🕮 V115 WFG C: bi8-th19, bi8-tv18 (Sheet 15)
- 🕮 V115 WFG D: bi8-th17, bi8-tv16 (Sheet 16)
- 🕮 V115 WFG E: bi8-th15, bi9-th15 (Sheet 17)
- 🕮 V115 WFG F: bi9-tv16, bi9-th17 (Sheet 18)
- 🕮 V115 WFG G: bi9-tv18, WFG.RTM-BQTISET (Sheet 19)
- 🕮 V115 WFG H: bi9-sxf-ps, bi9-sxd-ps (Sheet 20)
- 🕮 V120 Permit Module (Sheet 36)
- 🕮 Permit System Interface Panel (Sheet 37)

VME Chassis CFE-9B-PS2 modules
- 🕮 CPU, Memory Board, V108 Utility Module (Sheet 21)
- 🕮 V113/V114 MADC System (Sheet 22)
- 🕮 V115 WFG A: yo9-tv15, yo9-th16 (Sheet 23)
- 🕮 V115 WFG B: yo9-tv17, yo9-th18 (Sheet 24)
- 🕮 V115 WFG C: yo9-tv19, yo9-th20 (Sheet 25)
- 🕮 V115 WFG D: yo9-tv21, yo8-th20 (Sheet 26)
- 🕮 V115 WFG E: yo8-tv19, yo8-th18 (Sheet 27)
- 🕮 V115 WFG F: yo8-tv17, yo8-th16 (Sheet 28)
- 🕮 V115 WFG G: yo8-tv15, WFG.RTM-YQTISET (Sheet 29)
- 🕮 V115 WFG H: yo9-sxf-ps, yo9-sxd-ps (Sheet 30)
- 🕮 Modicon VME PLC (Sheet 32)
- 🕮 V102 Delay Module A - Event Link (Sheet 33)

NOTE: Sheets 31, 34, 35 are Blank

REV.	ZONE	ECN NO.	DATE	BY	CKR	APP.

CONTROLS- 6/4/03 8:05 AM 8698_01.dwg

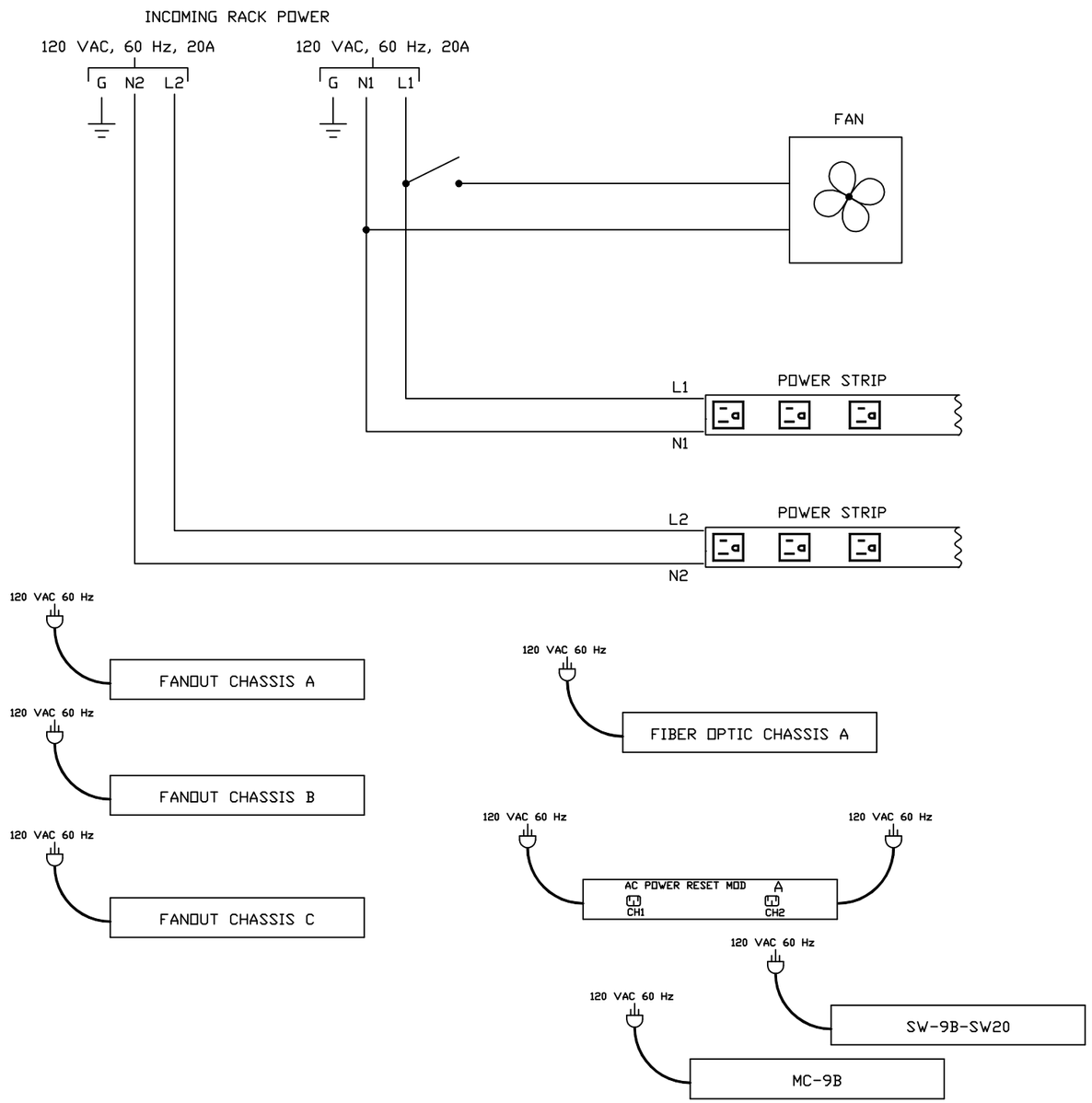

NOTE: ALL 120 VAC, 60 Hz POWER CORDS
PLUG INTO POWER STRIP OUTLETS

RACK R09B08

-3	-2	-1	REF DESIGNATOR	ITEM NO.	DESCRIPTION	MAT'L DWG NO./INL NO.
		90		11	CABLE ASSY, POWER SUPPLY TO MADC A/D I/O PANEL (3 CABLES/PS)	
		30		10	CABLE ASSY, LOW RES PS IF MODULE TO POWER SUPPLY	
		1		9	PERMIT SYSTEM INTERFACE CABLE, T120 TO PERMIT SYSTEM INTERFACE PANEL	D09-E2225-2
		33		8	SERIAL LINK TWINAX CABLE, LENGTH AS REQUIRED	94028176
		32		7	SERIAL LINK TWINAX CABLE, 1 FT	94028176
		30		6	DUPLEX MULTIMODE FIBER OPTIC CABLE, T115 TO LOW RES PS INTERFACE MODULE	94028249
		13		5	SINGLE MODE FIBER OPTIC CABLE	94028251
		8		4	MADC A/D I/O CABLE	94028216
		17		3	TRANSITION MODULE P2 RIBBON CABLE, V115, V120	94028159
		2		2	MADC V113 TO V114 P2 INTERFACE RIBBON CABLE	94028218
		3		1	NETWORK CABLE TO FEC	

QTY REQD

INTERPRET IN GENERAL ACCORDANCE WITH ASME Y14.24M-1989

UNLESS OTHERWISE SPECIFIED DIMENSIONS ARE IN INCHES

DECIMAL TOLERANCES
.X ±.030
.XX ±.015
.XXX ±.005
ANGULAR TOLERANCE
± .5°

NA FINISH

BREAK SHARP EDGES
MAX. XX MIN. XX

OUTSTANDING ECN

Q.A. CATEGORY A-3

		DATE
DRAWN BY	Ed Koropsak	3/17/98
CHECKED BY		
DESIGN APPROVAL		
ENGINEER APPROVAL	R. MICHNOFF	3/17/98
SUPVR. APPROVAL		

NEXT ASSEMBLY

BROOKHAVEN NATIONAL LABORATORY
UPTON, N.Y. 11973

RHIC CONTROLS WIRING DIAGRAM
ALCOVE 1009B, RACK R09B08
POWER DISTRIBUTION

SIZE D | DRAWING NUMBER 94028698 | REV. A

MATERIAL: ——— SCALE: NA WEIGHT: – SHEET 1

*AUTOCAD

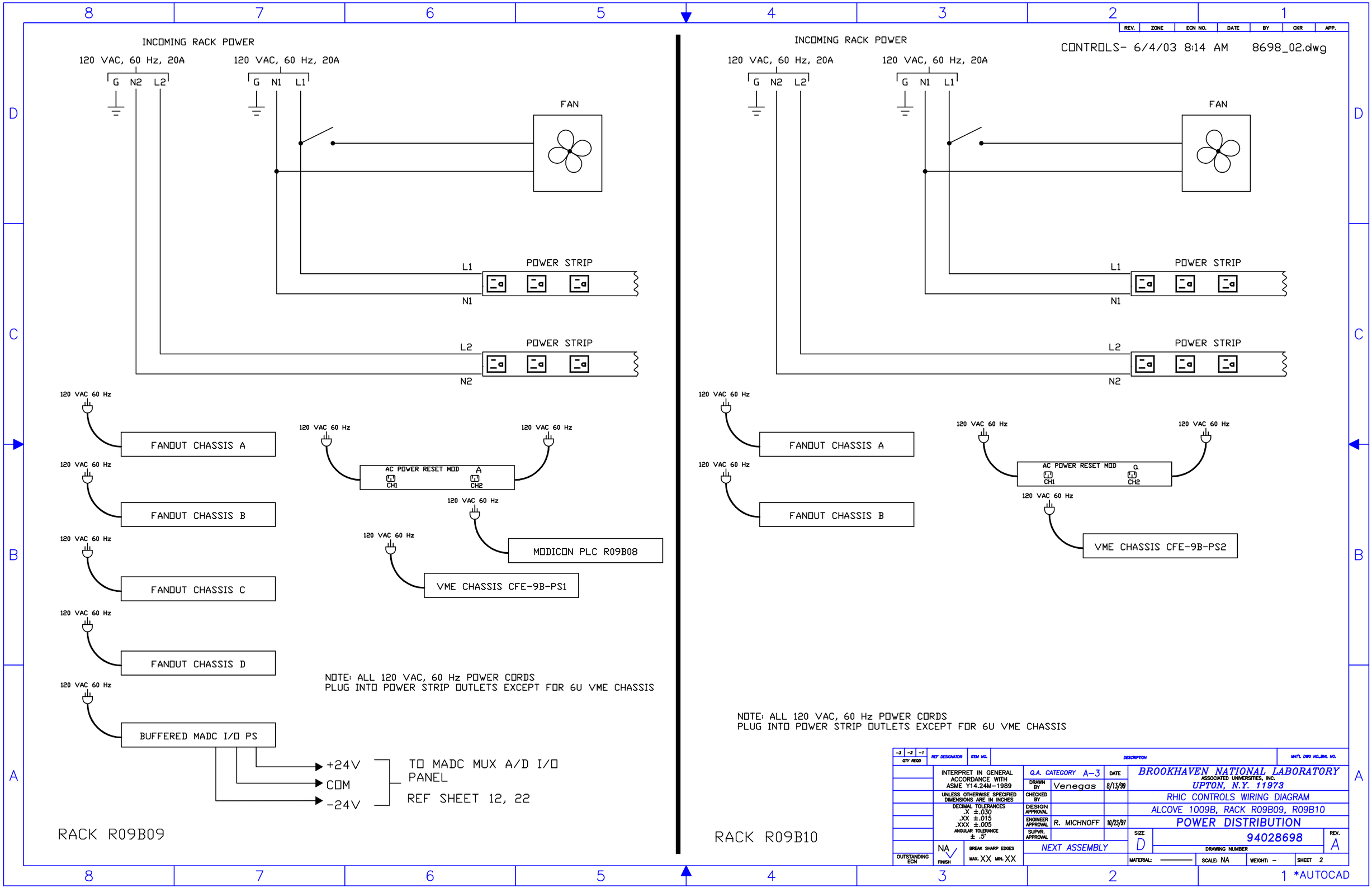

CONTROLS- 6/4/03 8:14 AM 8698_02.dwg
INCOMING RACK POWER
120 VAC, 60 Hz, 20A
G N2 L2
G N1 L1
FAN
L1
N1
POWER STRIP
L2
N2
120 VAC 60 Hz
FANOUT CHASSIS A
FANOUT CHASSIS B
FANOUT CHASSIS C
FANOUT CHASSIS D
BUFFERED MADC I/O PS
AC POWER RESET MOD
CH1
CH2
MODICON PLC R09B08
VME CHASSIS CFE-9B-PS1
VME CHASSIS CFE-9B-PS2
+24V
COM
-24V
TO MADC MUX A/D I/O PANEL
REF SHEET 12, 22
NOTE: ALL 120 VAC, 60 Hz POWER CORDS
PLUG INTO POWER STRIP OUTLETS EXCEPT FOR 6U VME CHASSIS
RACK R09B09
RACK R09B10
REV. ZONE ECN NO. DATE BY CKR APP.
-3 -2 -1 QTY REQD
REF DESIGNATOR
ITEM NO.
DESCRIPTION
MAT'L DWG NO.,BNL NO.
INTERPRET IN GENERAL ACCORDANCE WITH ASME Y14.24M-1989
UNLESS OTHERWISE SPECIFIED DIMENSIONS ARE IN INCHES
DECIMAL TOLERANCES .X ±.030 .XX ±.015 .XXX ±.005
ANGULAR TOLERANCE ± .5°
OUTSTANDING ECN
NA
FINISH
BREAK SHARP EDGES
MAX. XX MIN. XX
Q.A. CATEGORY A-3
DATE
DRAWN BY Venegas 8/13/99
CHECKED BY
DESIGN APPROVAL
ENGINEER APPROVAL R. MICHNOFF 10/23/97
SUPVR. APPROVAL
NEXT ASSEMBLY
BROOKHAVEN NATIONAL LABORATORY
ASSOCIATED UNIVERSITIES, INC.
UPTON, N.Y. 11973
RHIC CONTROLS WIRING DIAGRAM
ALCOVE 1009B, RACK R09B09, R09B10
POWER DISTRIBUTION
SIZE D
94028698
DRAWING NUMBER
REV. A
MATERIAL:
SCALE: NA
WEIGHT: -
SHEET 2
1 *AUTOCAD

REV.	ZONE	ECN NO.	DATE	BY	CKR	APP.

MULTIMODE FIBER OPTIC TRANSMITTER

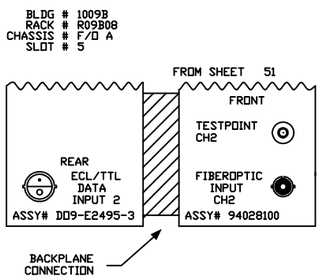

FIBER OPTIC RECEIVER

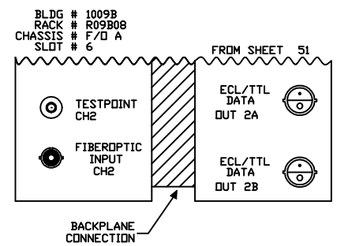

FIBER OPTIC RECEIVER

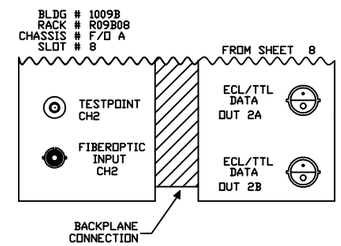

-3	-2	-1	REF DESIGNATOR	ITEM NO.	DESCRIPTION	MAT'L. DWG NO.,SPEC. NO.
QTY REQD						

INTERPRET IN GENERAL ACCORDANCE WITH ASME Y14.24M-1989

UNLESS OTHERWISE SPECIFIED DIMENSIONS ARE IN INCHES

DECIMAL TOLERANCES
.X ±.030
.XX ±.015
.XXX ±.005
ANGULAR TOLERANCE
± .5°

OUTSTANDING ECN

NA FINISH

BREAK SHARP EDGES
MAX. XX MIN. XX

Q.A. CATEGORY A-3		DATE
DRAWN BY	Ed Koropsak	3/17/98
CHECKED BY		
DESIGN APPROVAL		
ENGINEER APPROVAL	R. MICHNOFF	3/17/98
SUPVR. APPROVAL		
NEXT ASSEMBLY		

BROOKHAVEN NATIONAL LABORATORY
[redacted]
UPTON, N.Y. 11973

RHIC CONTROLS WIRING DIAGRAM

ALCOVE 1009B

SPARE F/O RCVR/XMIT CHANNELS

SIZE D | DRAWING NUMBER 94028698 | REV. A

MATERIAL: ——— SCALE: NA WEIGHT: – SHEET 3 OF 38

*AUTOCAD

REV.	ZONE	ECN NO.	DATE	BY	CKR	APP.

Controls 8/13/99 2:22 PM 8698_04.dwg

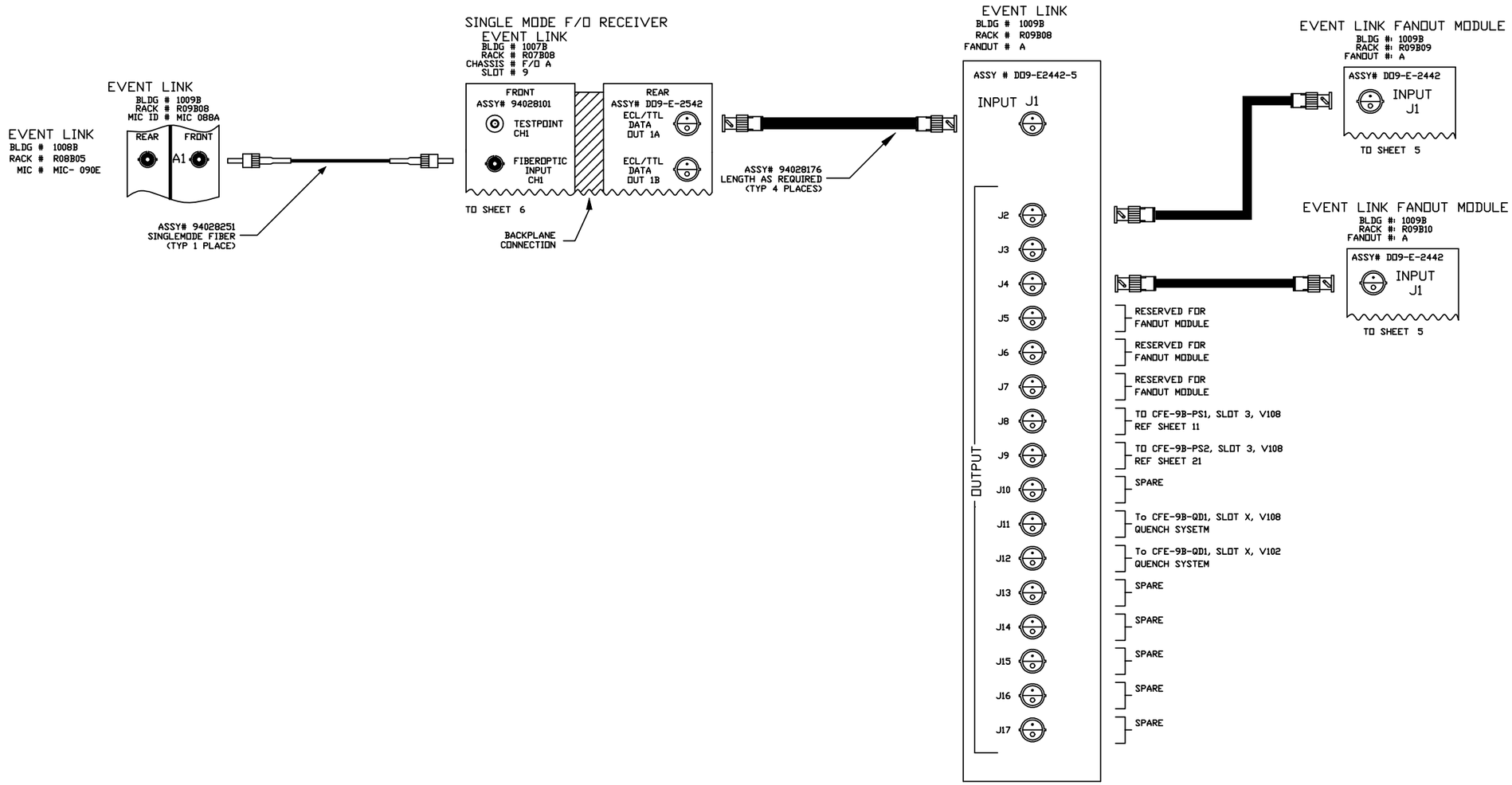

-3	-2	-1	REF DESIGNATOR	ITEM NO.	DESCRIPTION	MAT'L. DWG NO./INL NO.
QTY REQD						

INTERPRET IN GENERAL ACCORDANCE WITH ASME Y14.24M-1989

UNLESS OTHERWISE SPECIFIED DIMENSIONS ARE IN INCHES

DECIMAL TOLERANCES
.X ±.030
.XX ±.015
.XXX ±.005
ANGULAR TOLERANCE
± .5°

NA FINISH

BREAK SHARP EDGES
MAX. XX MIN. XX

OUTSTANDING ECN

Q.A. CATEGORY A-3		DATE
DRAWN BY	Ed Koropsak	3/17/98
CHECKED BY		
DESIGN APPROVAL		
ENGINEER APPROVAL	R. MICHNOFF	3/17/98
SUPVR. APPROVAL		

NEXT ASSEMBLY

BROOKHAVEN NATIONAL LABORATORY
UPTON, N.Y. 11973

RHIC CONTROLS WIRING DIAGRAM

ALCOVE 1009B

EVENT LINK

SIZE D | DRAWING NUMBER 94028698 | REV. A

MATERIAL: ——— SCALE: NA WEIGHT: – SHEET 4 OF 38

*AUTOCAD

REV.	ZONE	ECN NO.	DATE	BY	CKR	APP.

Controls 8/13/99 9:03 AM 8698_05.dwg

EVENT LINK FANOUT MODULE

BLDG # 1007B
RACK # R09B09
FANOUT # A

FROM SHEET 4
ASSY # DD9-E2442-5

OUTPUT

J2	TO CFE-9B-PS1, SLOT 21,V120 REF SHEET 36
J3	TO CFE-9B-PS1, SLOT 4, V113 REF SHEET 12
J4	SPARE
J5	SPARE
J6	SPARE
J7	SPARE
J8	SPARE
J9	SPARE
J10	To CFE-9B-PS1, SLOT 13, T115 REF SHEET 20
J11	To CFE-9B-PS1, SLOT 12, T115 REF SHEET 19
J12	To CFE-9B-PS1, SLOT 11, T115 REF SHEET 18
J13	To CFE-9B-PS1, SLOT 10, T115 REF SHEET 17
J14	To CFE-9B-PS1, SLOT 9, T115 REF SHEET 16
J15	To CFE-9B-PS1, SLOT 8, T115 REF SHEET 15
J16	To CFE-9B-PS1, SLOT 7, T115 REF SHEET 14
J17	To CFE-9B-PS1, SLOT 6, T115 REF SHEET 13

EVENT LINK FANOUT MODULE

BLDG # 1009B
RACK # R09B10
FANOUT # A

FROM SHEET 4
ASSY # DD9-E2442-5

OUTPUT

J2	TO CFE-9B-PS2, SLOT 20, V102 REF SHEET 33
J3	TO CFE-9B-PS2, SLOT4, V113 REF SHEET 22
J4	SPARE
J5	SPARE
J6	SPARE
J7	SPARE
J8	SPARE
J9	SPARE
J10	To CFE-9B-PS2, SLOT 13, T115 REF SHEET 30
J11	To CFE-9B-PS2, SLOT 12, T115 REF SHEET 29
J12	To CFE-9B-PS2, SLOT 11, T115 REF SHEET 28
J13	To CFE-9B-PS2, SLOT 10, T115 REF SHEET 27
J14	To CFE-9B-PS2, SLOT 9, T115 REF SHEET 26
J15	To CFE-9B-PS2, SLOT 8, T115 REF SHEET 25
J16	To CFE-9B-PS2, SLOT 7, T115 REF SHEET 24
J17	To CFE-9B-PS2, SLOT 6, T115 REF SHEET 23

-3	-2	-1	REF DESIGNATOR	ITEM NO.	DESCRIPTION	MAT'L. DWG NO.,BNL NO.
QTY REQD						

INTERPRET IN GENERAL ACCORDANCE WITH ASME Y14.24M-1989

UNLESS OTHERWISE SPECIFIED DIMENSIONS ARE IN INCHES

DECIMAL TOLERANCES
.X ±.030
.XX ±.015
.XXX ±.005
ANGULAR TOLERANCE ± .5°

OUTSTANDING ECN

NA FINISH

BREAK SHARP EDGES MAX. XX MIN. XX

Q.A. CATEGORY A-3		DATE
DRAWN BY	Ed Koropsak	3/17/98
CHECKED BY		
DESIGN APPROVAL		
ENGINEER APPROVAL	R. MICHNOFF	3/17/98
SUPVR. APPROVAL		
NEXT ASSEMBLY		

BROOKHAVEN NATIONAL LABORATORY
UPTON, N.Y. 11973

RHIC CONTROLS WIRING DIAGRAM
ALCOVE 1009B
EVENT LINK

SIZE D
94028698
DRAWING NUMBER
REV. A

MATERIAL: ——— SCALE: NA WEIGHT: – SHEET 5 OF 38

*AUTOCAD

REV.	ZONE	ECN NO.	DATE	BY	CKR	APP.

Controls 8/13/99 9:09 AM 8698_06.dwg

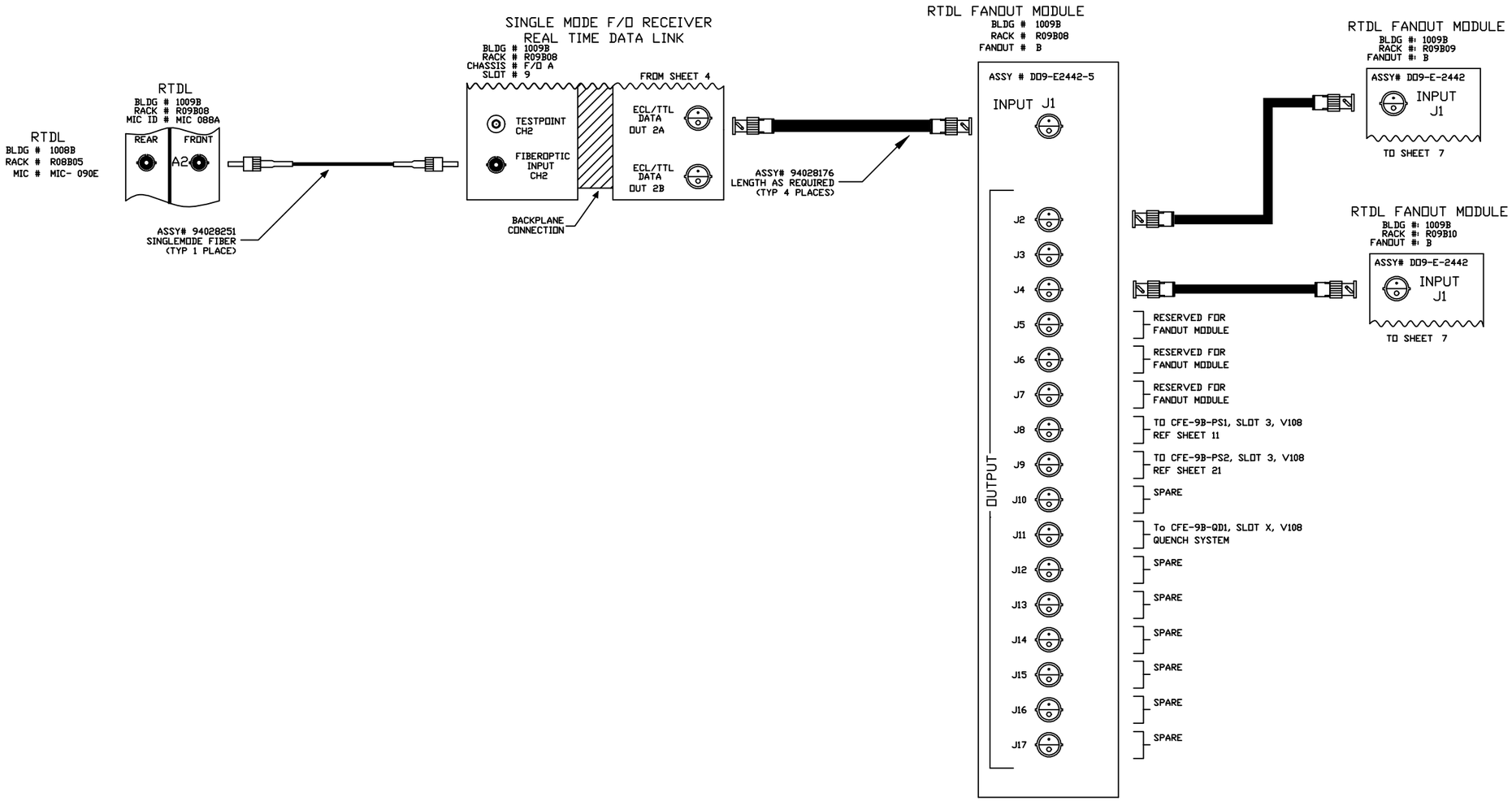

-3	-2	-1	REF DESIGNATOR	ITEM NO.	DESCRIPTION	MAT'L. DWG NO./INL NO.
QTY REQD						

INTERPRET IN GENERAL ACCORDANCE WITH ASME Y14.24M-1989

UNLESS OTHERWISE SPECIFIED DIMENSIONS ARE IN INCHES

DECIMAL TOLERANCES
.X ±.030
.XX ±.015
.XXX ±.005
ANGULAR TOLERANCE
± .5°

NA FINISH

BREAK SHARP EDGES
MAX. XX MIN. XX

OUTSTANDING ECN

Q.A. CATEGORY A-3		DATE
DRAWN BY	Ed Koropsak	3/17/98
CHECKED BY		
DESIGN APPROVAL		
ENGINEER APPROVAL	R. MICHNOFF	3/17/98
SUPVR. APPROVAL		

NEXT ASSEMBLY

BROOKHAVEN NATIONAL LABORATORY
UPTON, N.Y. 11973

RHIC CONTROLS WIRING DIAGRAM
ALCOVE 1009B
REAL TIME DATA LINK

SIZE D | DRAWING NUMBER 94028698 | REV. A

MATERIAL: ——— SCALE: NA WEIGHT: – SHEET 6 OF 38

*AUTOCAD

REV.	ZONE	ECN NO.	DATE	BY	CKR	APP.

RTDL FANOUT MODULE
BLDG # 1009B
RACK # R09B09
FANOUT # B

FROM SHEET 6
ASSY # DD9-E2442-5

OUTPUT

J2	SPARE
J3	SPARE
J4	SPARE
J5	SPARE
J6	SPARE
J7	SPARE
J8	SPARE
J9	SPARE
J10	To CFE-9B-PS1, SLOT 13, T115 REF SHEET 20
J11	To CFE-9B-PS1, SLOT 12, T115 REF SHEET 19
J12	To CFE-9B-PS1, SLOT 11, T115 REF SHEET 18
J13	To CFE-9B-PS1, SLOT 10, T115 REF SHEET 17
J14	To CFE-9B-PS1, SLOT 9, T115 REF SHEET 16
J15	To CFE-9B-PS1, SLOT 8, T115 REF SHEET 15
J16	To CFE-9B-PS1, SLOT 7, T115 REF SHEET 14
J17	To CFE-9B-PS1, SLOT 6, T115 REF SHEET 13

RTDL FANOUT MODULE
BLDG # 1009B
RACK # R09B10
FANOUT # B

FROM SHEET 6
ASSY # DD9-E2442-5

OUTPUT

J2	SPARE
J3	SPARE
J4	SPARE
J5	SPARE
J6	SPARE
J7	SPARE
J8	SPARE
J9	SPARE
J10	To CFE-9B-PS2, SLOT 13, T115 REF SHEET 30
J11	To CFE-9B-PS2, SLOT 12, T115 REF SHEET 29
J12	To CFE-9B-PS2, SLOT 11, T115 REF SHEET 28
J13	To CFE-9B-PS2, SLOT 10, T115 REF SHEET 27
J14	To CFE-9B-PS2, SLOT 9, T115 REF SHEET 26
J15	To CFE-9B-PS2, SLOT 8, T115 REF SHEET 25
J16	To CFE-9B-PS2, SLOT 7, T115 REF SHEET 24
J17	To CFE-9B-PS2, SLOT 6, T115 REF SHEET 23

-3	-2	-1	REF DESIGNATOR	ITEM NO.	DESCRIPTION	MAT'L DWG NO.,SPNL NO.
QTY REQD						

INTERPRET IN GENERAL ACCORDANCE WITH ASME Y14.24M-1989

UNLESS OTHERWISE SPECIFIED DIMENSIONS ARE IN INCHES

DECIMAL TOLERANCES
.X ±.030
.XX ±.015
.XXX ±.005
ANGULAR TOLERANCE ± .5°

OUTSTANDING ECN

NA FINISH

BREAK SHARP EDGES
MAX. XX MIN. XX

Q.A. CATEGORY A-3		DATE
DRAWN BY	Ed Koropsak	3/17/98
CHECKED BY		
DESIGN APPROVAL		
ENGINEER APPROVAL	R. MICHNOFF	3/17/98
SUPVR. APPROVAL		
NEXT ASSEMBLY		

BROOKHAVEN NATIONAL LABORATORY
UPTON, N.Y. 11973

RHIC CONTROLS WIRING DIAGRAM
ALCOVE1009B

REAL TIME DATA LINK

SIZE D
94028698
DRAWING NUMBER
REV. A

MATERIAL: ——— SCALE: NA WEIGHT: – SHEET 7 OF 38

*AUTOCAD

REV.	ZONE	ECN NO.	DATE	BY	CKR	APP.

CONTROLS- 6/4/03 8:19 AM 8698_08.dwg

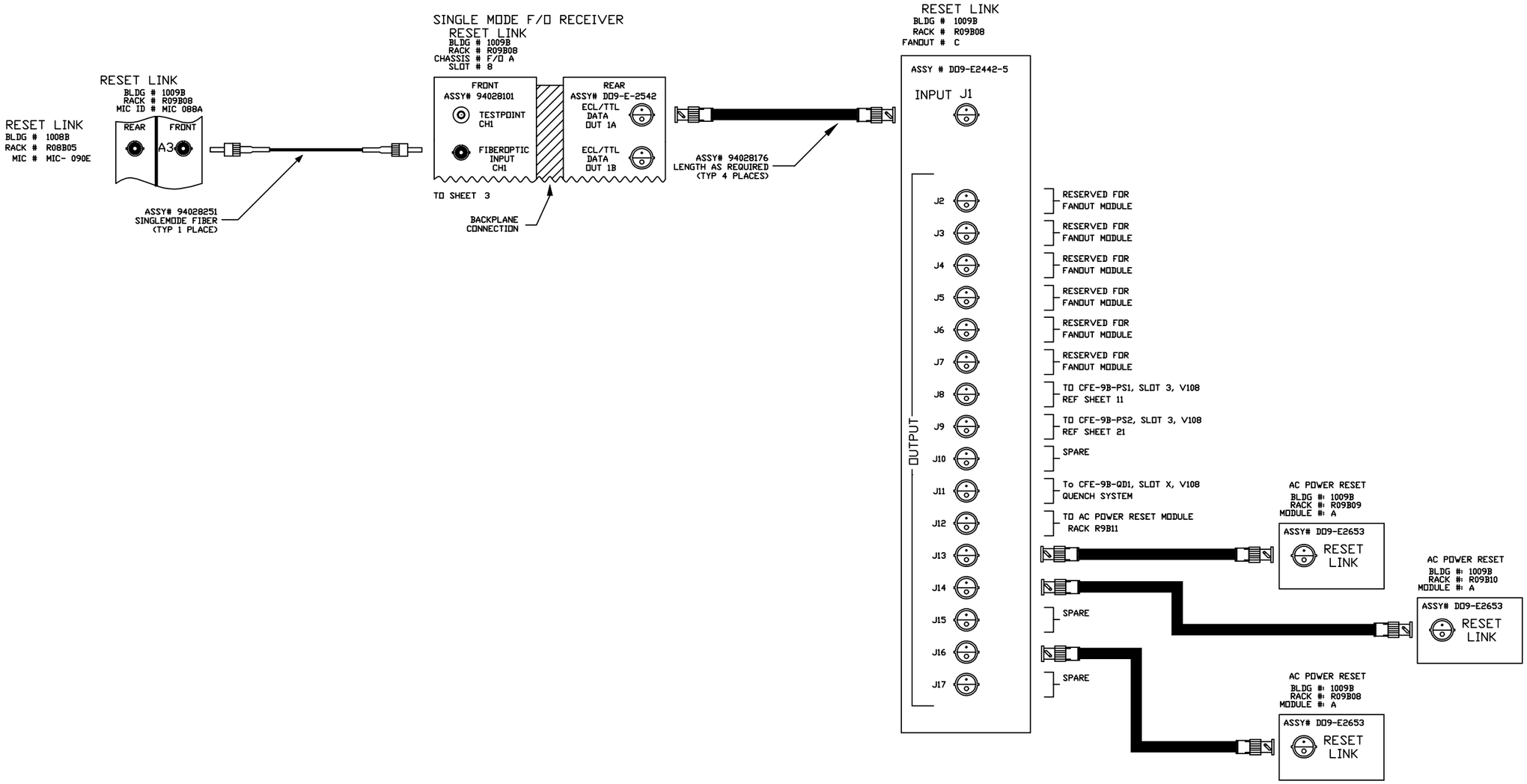

-3	-2	-1	REF DESIGNATOR	ITEM NO.	DESCRIPTION	MAT'L. DWG NO./INL NO.
QTY REQD						

INTERPRET IN GENERAL ACCORDANCE WITH ASME Y14.24M-1989

UNLESS OTHERWISE SPECIFIED DIMENSIONS ARE IN INCHES

DECIMAL TOLERANCES
.X ±.030
.XX ±.015
.XXX ±.005
ANGULAR TOLERANCE
± .5°

NA FINISH

BREAK SHARP EDGES
MAX. XX MIN. XX

OUTSTANDING ECN

Q.A. CATEGORY A-3		DATE
DRAWN BY	Venegas	8/13/99
CHECKED BY		
DESIGN APPROVAL		
ENGINEER APPROVAL	R. MICHNOFF	10/23/97
SUPVR. APPROVAL		

NEXT ASSEMBLY

BROOKHAVEN NATIONAL LABORATORY
ASSOCIATED UNIVERSITIES, INC.
UPTON, N.Y. 11973

RHIC CONTROLS WIRING DIAGRAM
ALCOVE 1009B
RESET LINK

SIZE D | DRAWING NUMBER 94028698 | REV. A

MATERIAL: ——— SCALE: NA WEIGHT: – SHEET 8

*AUTOCAD

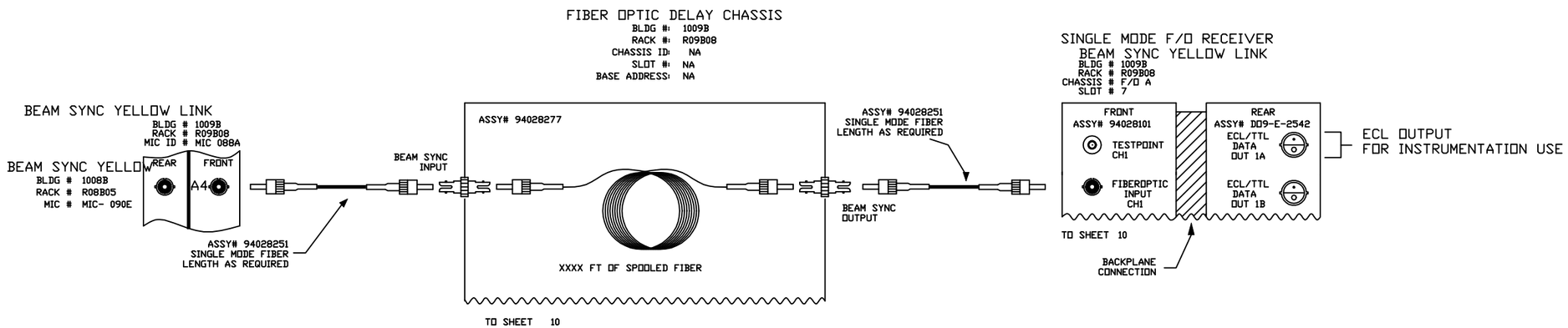

REV.	ZONE	ECN NO.	DATE	BY	CKR	APP.

-3	-2	-1	REF DESIGNATOR	ITEM NO.	DESCRIPTION	MAT'L. DWG NO.,SPEC. NO.
QTY REQD						

INTERPRET IN GENERAL ACCORDANCE WITH ASME Y14.24M-1989

UNLESS OTHERWISE SPECIFIED DIMENSIONS ARE IN INCHES

DECIMAL TOLERANCES
.X ±.030
.XX ±.015
.XXX ±.005
ANGULAR TOLERANCE
± .5°

NA FINISH

BREAK SHARP EDGES
MAX. XX MIN. XX

OUTSTANDING ECN

Q.A. CATEGORY A-3		DATE	BROOKHAVEN NATIONAL LABORATORY
DRAWN BY	Ed Koropsak	3/17/98	UPTON, N.Y. 11973
CHECKED BY			RHIC CONTROLS WIRING DIAGRAM
DESIGN APPROVAL			ALCOVE 1009B
ENGINEER APPROVAL	R. MICHNOFF	3/17/98	BEAM SYNC YELLOW LINK
SUPVR. APPROVAL			SIZE D — 94028698 — REV. A
NEXT ASSEMBLY			DRAWING NUMBER

MATERIAL: ——— SCALE: NA WEIGHT: – SHEET 9 OF 38

*AUTOCAD

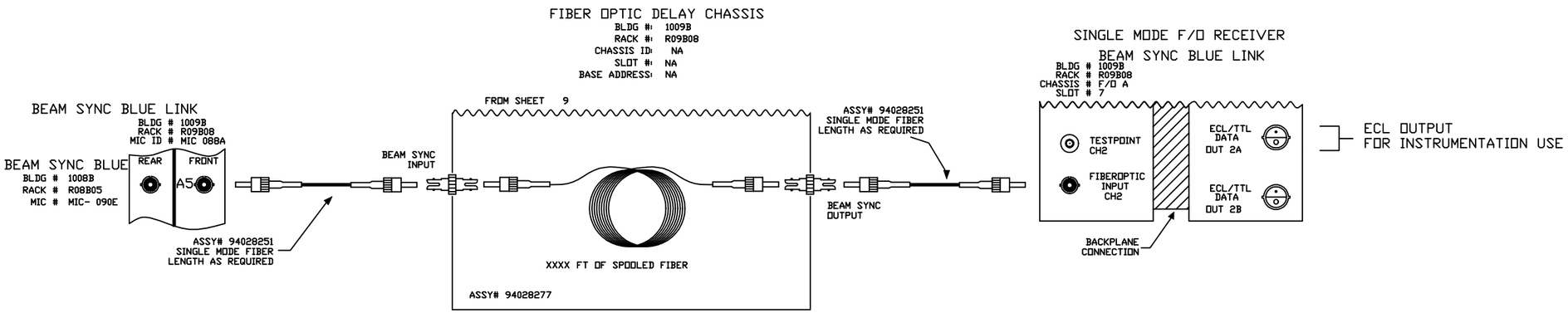

REV.	ZONE	ECN NO.	DATE	BY	CKR	APP.

-3	-2	-1	REF DESIGNATOR	ITEM NO.	DESCRIPTION	MAT'L. DWG NO.,SPEC. NO.
QTY REQD						

INTERPRET IN GENERAL ACCORDANCE WITH ASME Y14.24M-1989

UNLESS OTHERWISE SPECIFIED DIMENSIONS ARE IN INCHES

DECIMAL TOLERANCES
.X ±.030
.XX ±.015
.XXX ±.005
ANGULAR TOLERANCE
± .5°

NA FINISH

BREAK SHARP EDGES
MAX. XX MIN. XX

OUTSTANDING ECN

Q.A. CATEGORY A-3		DATE
DRAWN BY	Ed Koropsak	3/17/98
CHECKED BY		
DESIGN APPROVAL		
ENGINEER APPROVAL	R. MICHNOFF	3/17/98
SUPVR. APPROVAL		
NEXT ASSEMBLY		

BROOKHAVEN NATIONAL LABORATORY
UPTON, N.Y. 11973

RHIC CONTROLS WIRING DIAGRAM
ALCOVE 1009B
BEAM SYNC BLUE LINK

SIZE D
94028698
DRAWING NUMBER
REV. A

MATERIAL: ——— SCALE: NA WEIGHT: – SHEET 10 OF 38

*AUTOCAD

REV.	ZONE	ECN NO.	DATE	BY	CKR	APP.

CONTROLS- 6/17/03 3:43 PM 8698_11.dwg

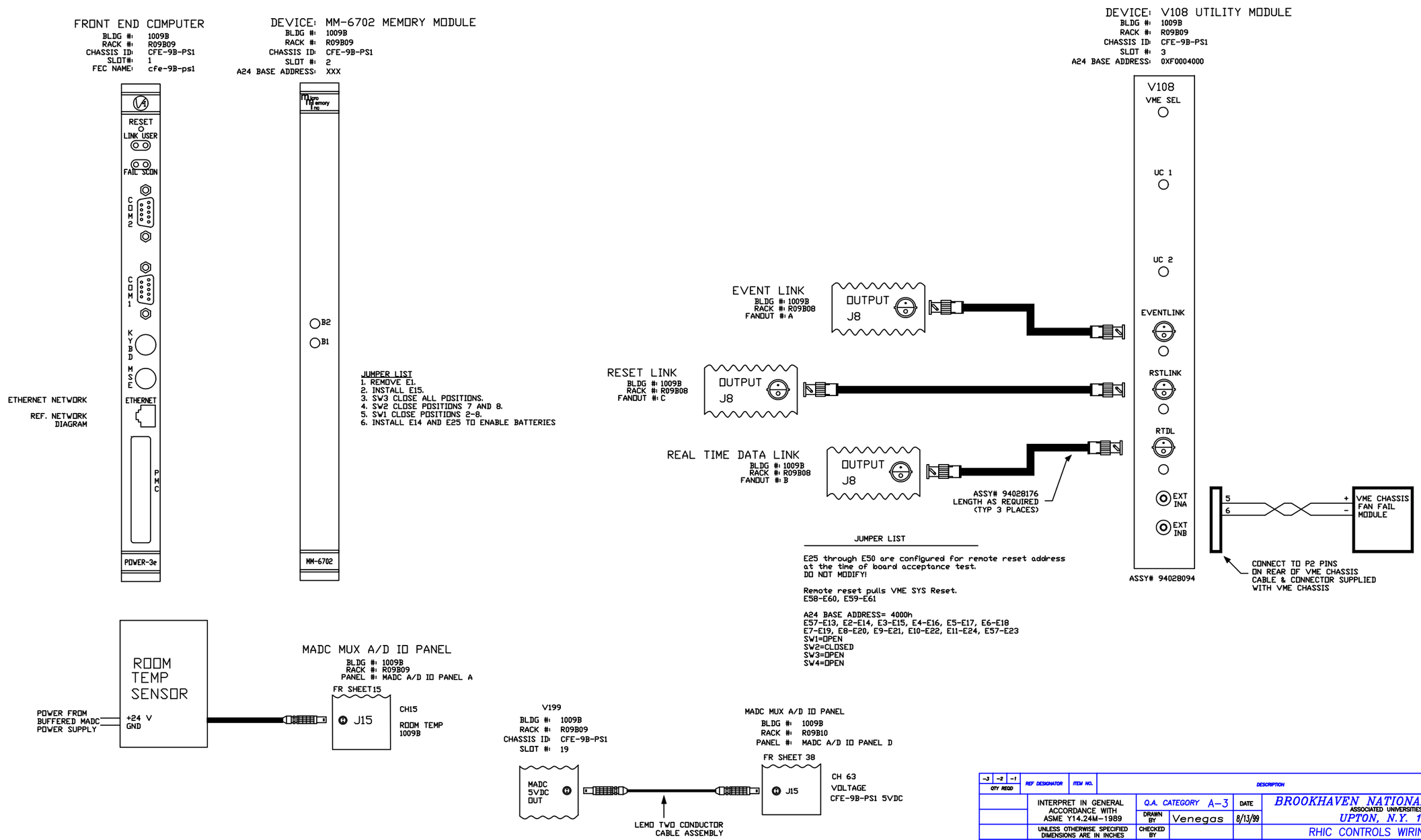

-3	-2	-1	REF DESIGNATOR	ITEM NO.	DESCRIPTION	MAT'L DWG NO.,BNL NO.
QTY REQD						

INTERPRET IN GENERAL ACCORDANCE WITH ASME Y14.24M-1989

UNLESS OTHERWISE SPECIFIED DIMENSIONS ARE IN INCHES

DECIMAL TOLERANCES
.X ±.030
.XX ±.015
.XXX ±.005
ANGULAR TOLERANCE ± .5°

OUTSTANDING ECN: NA

FINISH: NA

BREAK SHARP EDGES MAX. XX MIN. XX

Q.A. CATEGORY A-3	DATE	
DRAWN BY Venegas	8/13/99	
CHECKED BY		
DESIGN APPROVAL		
ENGINEER APPROVAL R. MICHNOFF	10/21/97	
SUPVR. APPROVAL		
NEXT ASSEMBLY		

BROOKHAVEN NATIONAL LABORATORY
ASSOCIATED UNIVERSITIES, INC.
UPTON, N.Y. 11973

RHIC CONTROLS WIRING DIAGRAM

ALCOVE 1009B, VME CHASSIS CFE-9B-PS1

CPU/MEMORY /V108 UTIL MODULE

SIZE D | DRAWING NUMBER 94028698 | REV. A

MATERIAL: ——— SCALE: NA WEIGHT: — SHEET 11

*AUTOCAD

CONTROLS- 6/4/03 8:48 AM 8698_12.dwg

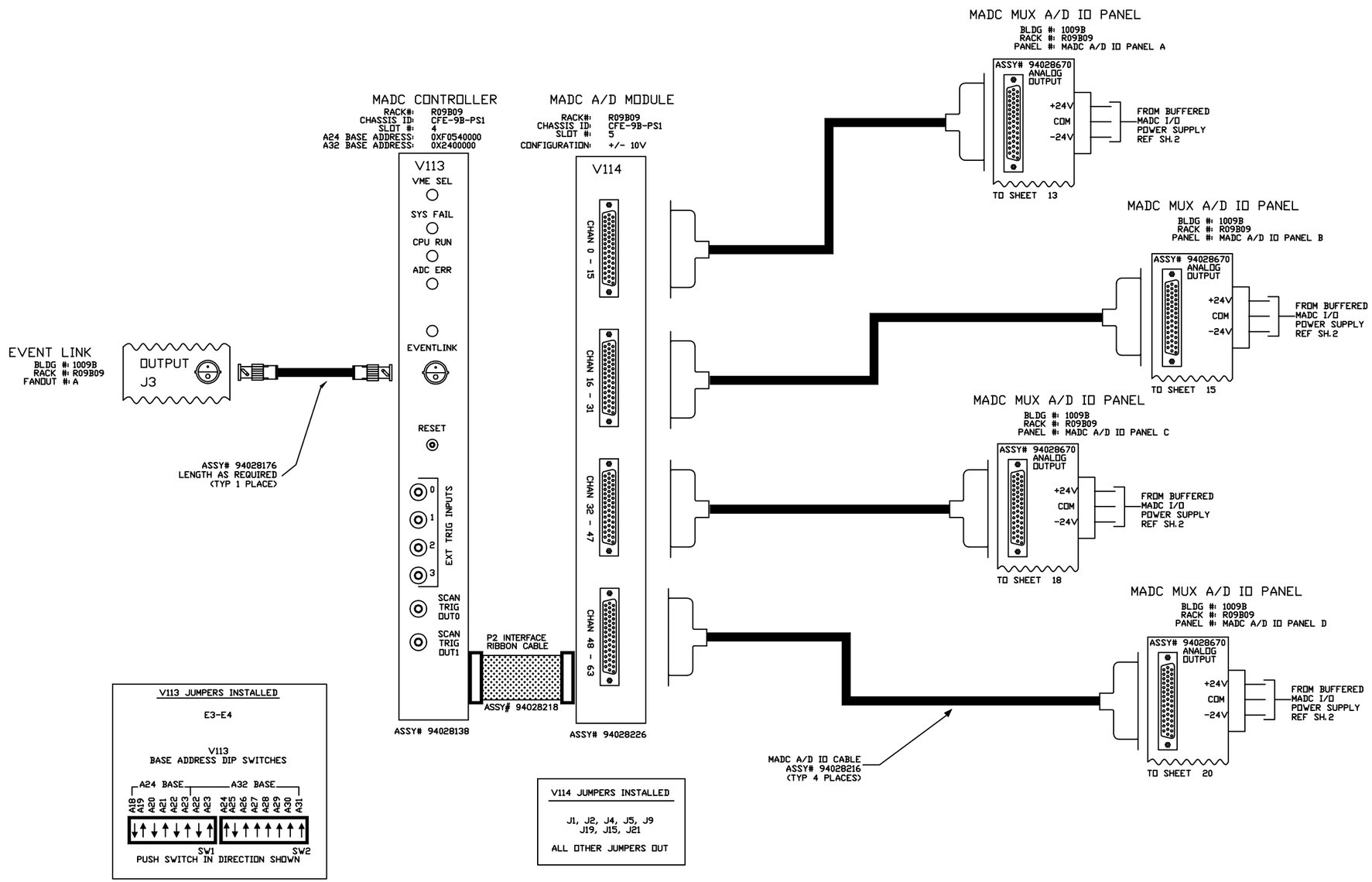

V113 JUMPERS INSTALLED

E3-E4

V113
BASE ADDRESS DIP SWITCHES

A24 BASE — A32 BASE

A18	A19	A20	A21	A22	A23	A22	A23	A24	A25	A26	A27	A28	A29	A30	A31
↓	↓	↑	↑	↑	↑	↑	↑	↑	↑	↑	↑	↑	↑	↑	↑

SW1 SW2

PUSH SWITCH IN DIRECTION SHOWN

V114 JUMPERS INSTALLED

J1, J2, J4, J5, J9
J19, J15, J21

ALL OTHER JUMPERS OUT

REV.	ZONE	ECN NO.	DATE	BY	CKR	APP.

-3	-2	-1	REF DESIGNATOR	ITEM NO.	DESCRIPTION	MAT'L DWG NO./BHL NO.
QTY REQD						

INTERPRET IN GENERAL ACCORDANCE WITH ASME Y14.24M-1989

UNLESS OTHERWISE SPECIFIED DIMENSIONS ARE IN INCHES

DECIMAL TOLERANCES
.X ±.030
.XX ±.015
.XXX ±.005
ANGULAR TOLERANCE
± .5°

FINISH: NA

BREAK SHARP EDGES
MAX. XX MIN. XX

OUTSTANDING ECN

Q.A. CATEGORY A-3		DATE
DRAWN BY	Ed Koropsak	3/17/98
CHECKED BY		
DESIGN APPROVAL		
ENGINEER APPROVAL	R. MICHNOFF	3/17/98
SUPVR. APPROVAL		

NEXT ASSEMBLY

BROOKHAVEN NATIONAL LABORATORY
UPTON, N.Y. 11973

RHIC CONTROLS WIRING DIAGRAM

ALCOVE 1009B, VME CHASSIS CFE-9B-PS1

MADC SYSTEM

SIZE D — DRAWING NUMBER 94028698 — REV. A

MATERIAL: ——— SCALE: FULL WEIGHT: – SHEET 12

*AUTOCAD

REV.	ZONE	ECN NO.	DATE	BY	CKR	APP.

CONTROLS- 6/17/03 3:44 PM 8698_13.dwg

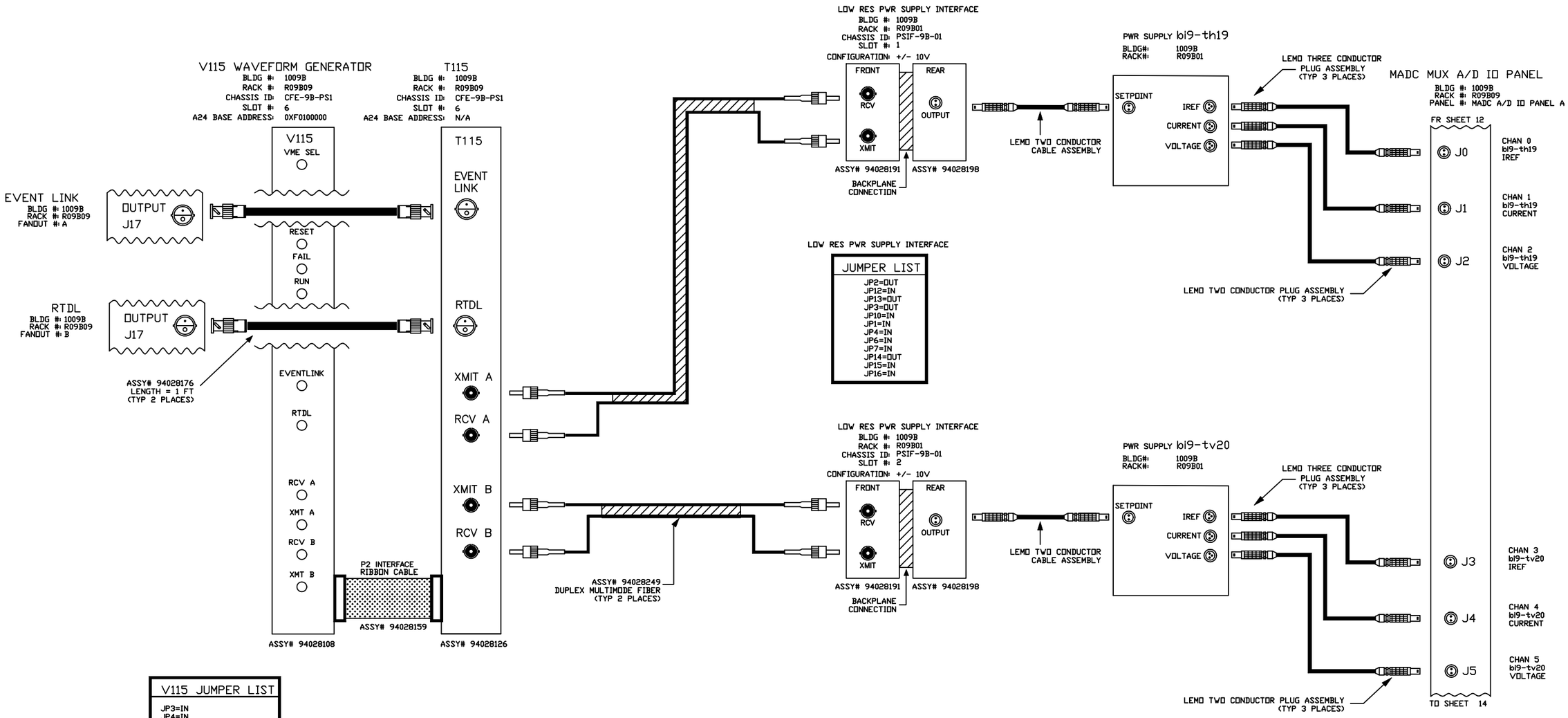

V115 JUMPER LIST
JP3=IN JP4=IN JP1=OUT JP2=OUT
A24 BASE ADDRESS JB1-A23=IN JB1-A22=IN JB1-A21=IN JB1-A20=OUT JB1-A19=IN JB1-A18=IN

-3	-2	-1	REF DESIGNATOR	ITEM NO.	DESCRIPTION	MAT'L DWG NO./INL NO.
QTY REQD						

INTERPRET IN GENERAL ACCORDANCE WITH ASME Y14.24M-1989

UNLESS OTHERWISE SPECIFIED DIMENSIONS ARE IN INCHES

DECIMAL TOLERANCES
.X ±.030
.XX ±.015
.XXX ±.005
ANGULAR TOLERANCE
± .5°

NA FINISH

BREAK SHARP EDGES
MAX. XX MIN. XX

OUTSTANDING ECN

Q.A. CATEGORY A-3		DATE
DRAWN BY	Ed Koropsak	3/17/98
CHECKED BY		
DESIGN APPROVAL		
ENGINEER APPROVAL	R. MICHNOFF	3/17/98
SUPVR. APPROVAL		

NEXT ASSEMBLY

BROOKHAVEN NATIONAL LABORATORY
UPTON, N.Y. 11973

RHIC CONTROLS WIRING DIAGRAM
ALCOVE 1009B, CFE-9B-PS1
POWER SUPPLY bi9-th19/bi9-tv20

SIZE D
DRAWING NUMBER 94028698
REV. A

MATERIAL: ——— SCALE: NA WEIGHT: – SHEET 13

*AUTOCAD

REV.	ZONE	ECN NO.	DATE	BY	CKR	APP.

CONTROLS- 6/17/03 3:46 PM 8698_14.dwg

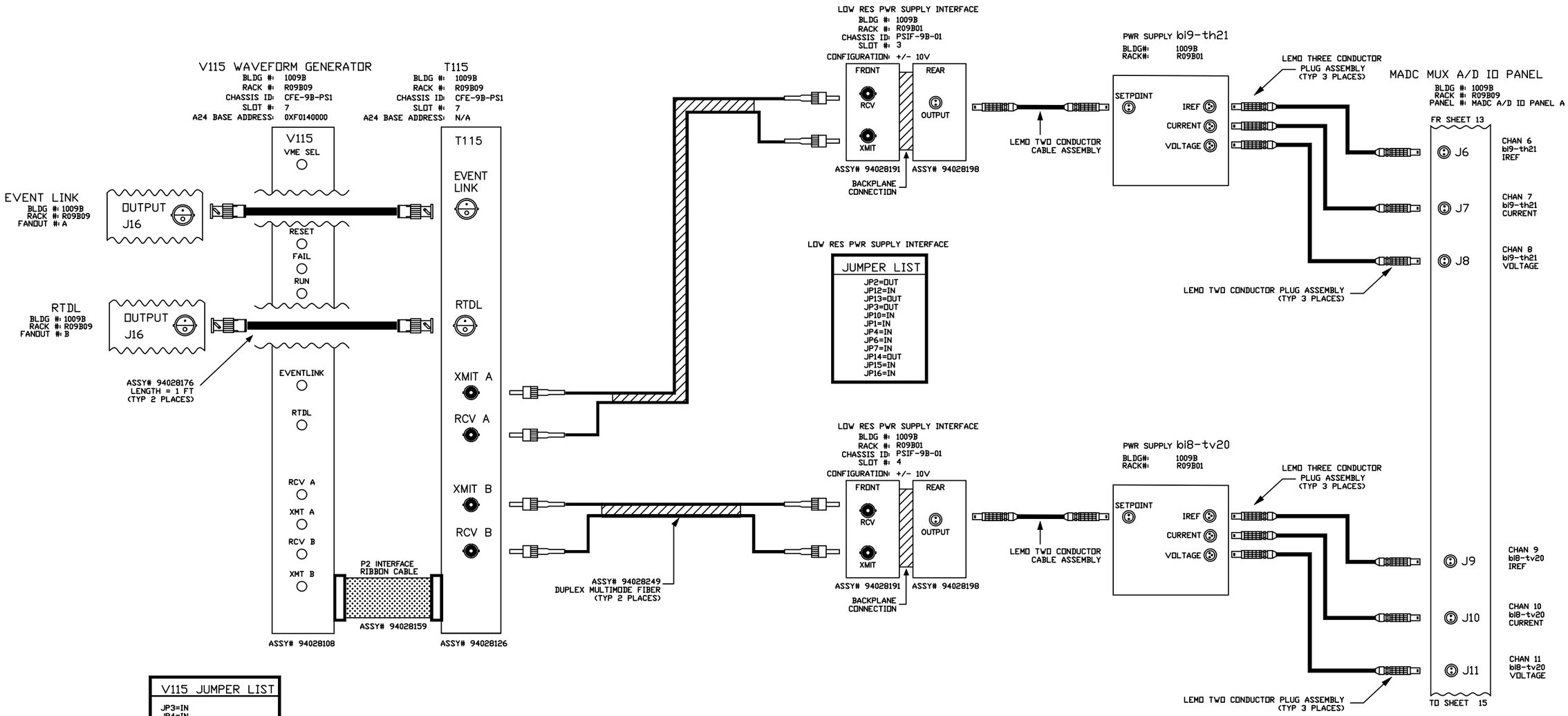

V115 JUMPER LIST
JP3=IN JP4=IN JP1=OUT JP2=OUT
A24 BASE ADDRESS JB1-A23=IN JB1-A22=IN JB1-A21=IN JB1-A20=OUT JB1-A19=IN JB1-A18=OUT

-3	-2	-1	REF DESIGNATOR	ITEM NO.	DESCRIPTION	MAT'L DWG NO./INL NO.
QTY REQD						

INTERPRET IN GENERAL ACCORDANCE WITH ASME Y14.24M-1989	Q.A. CATEGORY A-3	DATE	BROOKHAVEN NATIONAL LABORATORY
	DRAWN BY Ed Koropsak	3/17/98	UPTON, N.Y. 11973
UNLESS OTHERWISE SPECIFIED DIMENSIONS ARE IN INCHES	CHECKED BY		RHIC CONTROLS WIRING DIAGRAM
DECIMAL TOLERANCES .X ±.030 .XX ±.015 .XXX ±.005 ANGULAR TOLERANCE ± .5°	DESIGN APPROVAL		ALCOVE 1009B, CFE-9B-PS1
	ENGINEER APPROVAL R. MICHNOFF	3/17/98	POWER SUPPLY bi9-th21/bi8-tv20
	SUPVR. APPROVAL		SIZE D / 94028698 / REV. A
NA FINISH / BREAK SHARP EDGES MAX. XX MIN. XX	NEXT ASSEMBLY		DRAWING NUMBER
OUTSTANDING ECN			MATERIAL: ——— SCALE: NA WEIGHT: – SHEET 14

1 *AUTOCAD

REV.	ZONE	ECN NO.	DATE	BY	CKR	APP.

CONTROLS- 6/17/03 3:48 PM 8698_15.dwg

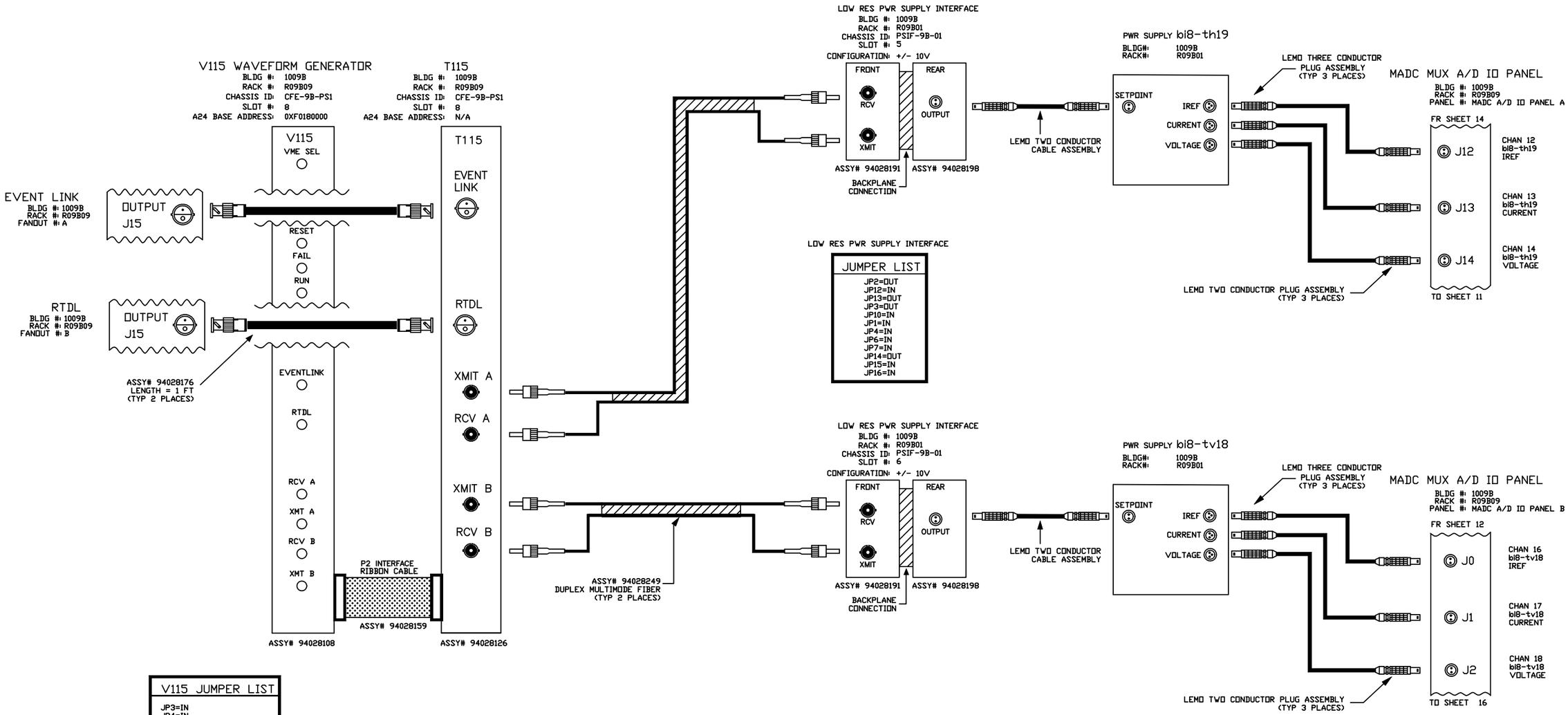

V115 JUMPER LIST
JP3=IN JP4=IN JP1=OUT JP2=OUT
A24 BASE ADDRESS JB1-A23=IN JB1-A22=IN JB1-A21=IN JB1-A20=OUT JB1-A19=OUT JB1-A18=IN

-3	-2	-1	REF DESIGNATOR	ITEM NO.	DESCRIPTION	MAT'L DWG NO./INL NO.
QTY REQD						

INTERPRET IN GENERAL ACCORDANCE WITH ASME Y14.24M-1989

UNLESS OTHERWISE SPECIFIED DIMENSIONS ARE IN INCHES

DECIMAL TOLERANCES
.X ±.030
.XX ±.015
.XXX ±.005
ANGULAR TOLERANCE
± .5°

NA FINISH

BREAK SHARP EDGES
MAX. XX MIN. XX

OUTSTANDING ECN

Q.A. CATEGORY A-3		DATE
DRAWN BY	Ed Koropsak	3/17/98
CHECKED BY		
DESIGN APPROVAL		
ENGINEER APPROVAL	R. MICHNOFF	3/17/98
SUPVR. APPROVAL		

NEXT ASSEMBLY

BROOKHAVEN NATIONAL LABORATORY
UPTON, N.Y. 11973

RHIC CONTROLS WIRING DIAGRAM
ALCOVE 1009B, CFE-9B-PS1
POWER SUPPLY bi8-th19/bi8-tv18

SIZE D
DRAWING NUMBER 94028698
REV. A

MATERIAL: ——— SCALE: NA WEIGHT: – SHEET 15

*AUTOCAD

REV.	ZONE	ECN NO.	DATE	BY	CKR	APP.

CONTROLS- 6/17/03 3:49 PM 8698_16.dwg

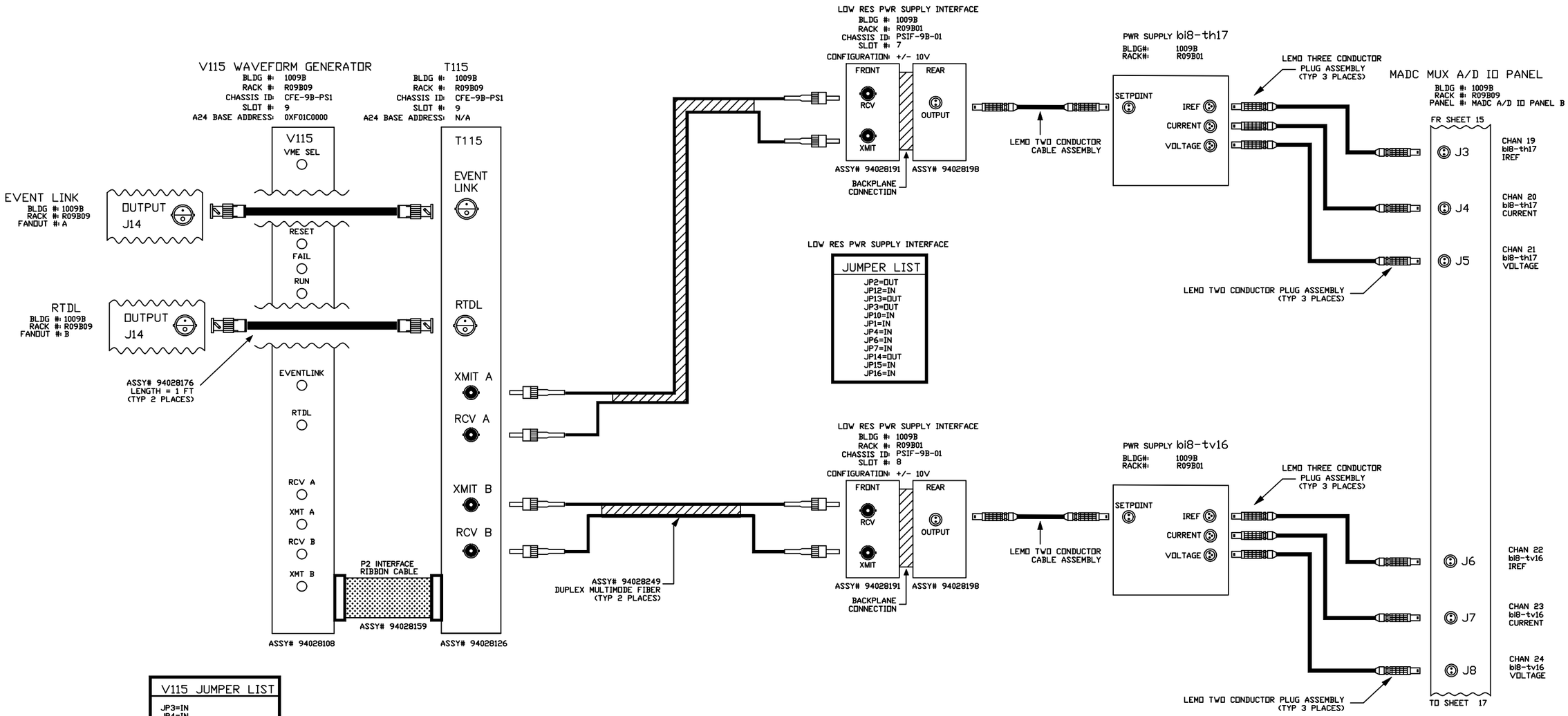

V115 JUMPER LIST
JP3=IN JP4=IN JP1=OUT JP2=OUT
A24 BASE ADDRESS JB1-A23=IN JB1-A22=IN JB1-A21=IN JB1-A20=OUT JB1-A19=OUT JB1-A18=OUT

-3	-2	-1	REF DESIGNATOR	ITEM NO.	DESCRIPTION	MAT'L DWG NO./INL NO.
QTY REQD						

INTERPRET IN GENERAL ACCORDANCE WITH ASME Y14.24M-1989	Q.A. CATEGORY A-3	DATE	BROOKHAVEN NATIONAL LABORATORY
	DRAWN BY Ed Koropsak	3/17/98	UPTON, N.Y. 11973
UNLESS OTHERWISE SPECIFIED DIMENSIONS ARE IN INCHES	CHECKED BY		RHIC CONTROLS WIRING DIAGRAM
DECIMAL TOLERANCES .X ±.030 .XX ±.015 .XXX ±.005 ANGULAR TOLERANCE ± .5°	DESIGN APPROVAL		ALCOVE 1009B, CFE-9B-PS1
	ENGINEER APPROVAL R. MICHNOFF	3/17/98	POWER SUPPLY bi8-th17/bi8-tv16
	SUPVR. APPROVAL		SIZE D / DRAWING NUMBER 94028698 / REV. A
NA FINISH / BREAK SHARP EDGES MAX. XX MIN. XX	NEXT ASSEMBLY		MATERIAL: ——— SCALE: NA WEIGHT: – SHEET 16
OUTSTANDING ECN			

1 *AUTOCAD

REV.	ZONE	ECN NO.	DATE	BY	CKR	APP.

CONTROLS- 6/17/03 3:51 PM 8698_17.dwg

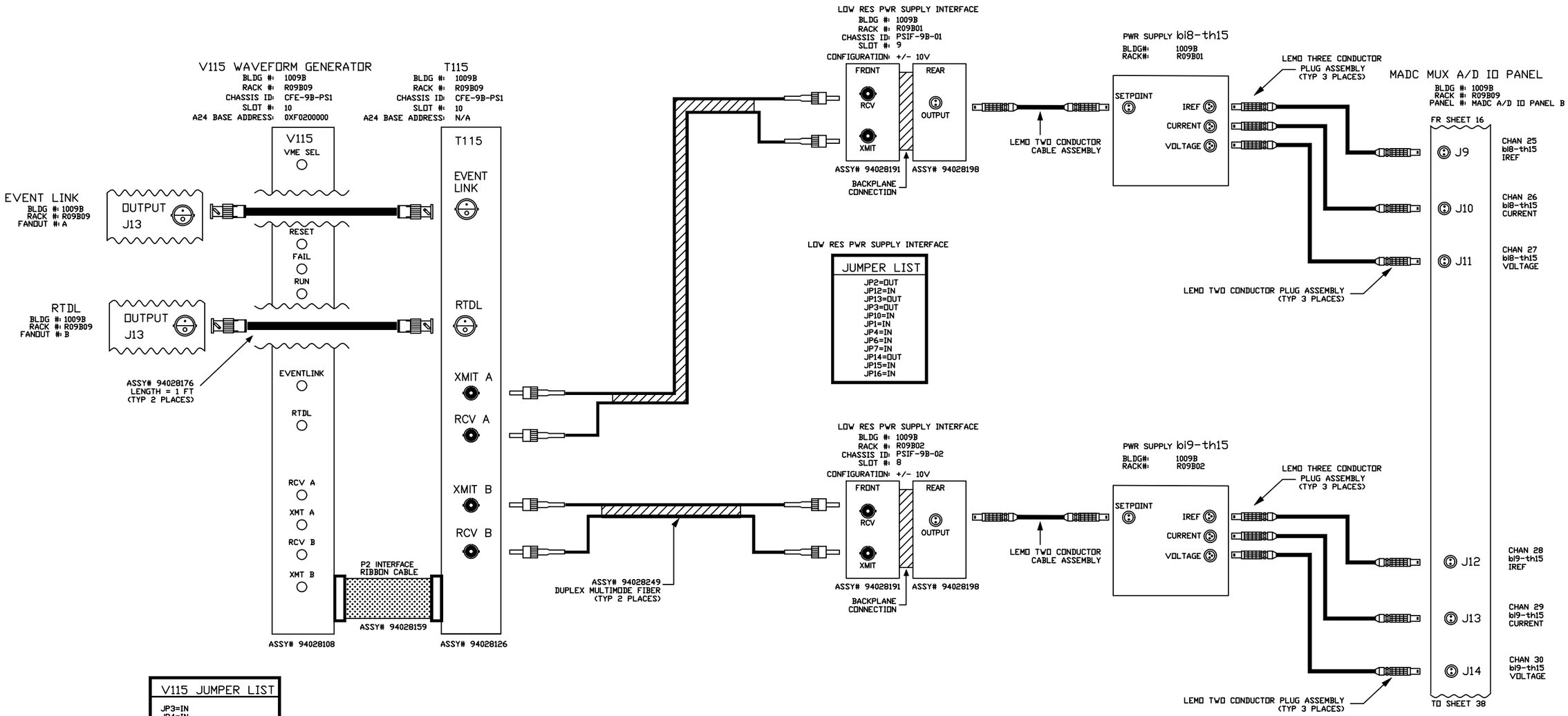

V115 JUMPER LIST
JP3=IN JP4=IN JP1=OUT JP2=OUT
A24 BASE ADDRESS JB1-A23=IN JB1-A22=IN JB1-A21=OUT JB1-A20=IN JB1-A19=IN JB1-A18=IN

-3	-2	-1	REF DESIGNATOR	ITEM NO.	DESCRIPTION	MAT'L DWG NO./INL NO.
QTY REQD						

INTERPRET IN GENERAL ACCORDANCE WITH ASME Y14.24M-1989

UNLESS OTHERWISE SPECIFIED DIMENSIONS ARE IN INCHES

DECIMAL TOLERANCES
.X ±.030
.XX ±.015
.XXX ±.005
ANGULAR TOLERANCE
± .5°

NA FINISH

BREAK SHARP EDGES
MAX. XX MIN. XX

OUTSTANDING ECN

Q.A. CATEGORY A-3		DATE
DRAWN BY	Ed Koropsak	3/17/98
CHECKED BY		
DESIGN APPROVAL		
ENGINEER APPROVAL	R. MICHNOFF	3/17/98
SUPVR. APPROVAL		

NEXT ASSEMBLY

BROOKHAVEN NATIONAL LABORATORY
UPTON, N.Y. 11973

RHIC CONTROLS WIRING DIAGRAM
ALCOVE 1009B, CFE-9B-PS1
POWER SUPPLY bi8-th15/bi9-th15

SIZE D
DRAWING NUMBER 94028698
REV. A

MATERIAL: ——— SCALE: NA WEIGHT: – SHEET 17

*AUTOCAD

REV.	ZONE	ECN NO.	DATE	BY	CKR	APP.

CONTROLS- 6/17/03 3:57 PM 8698_18.dwg

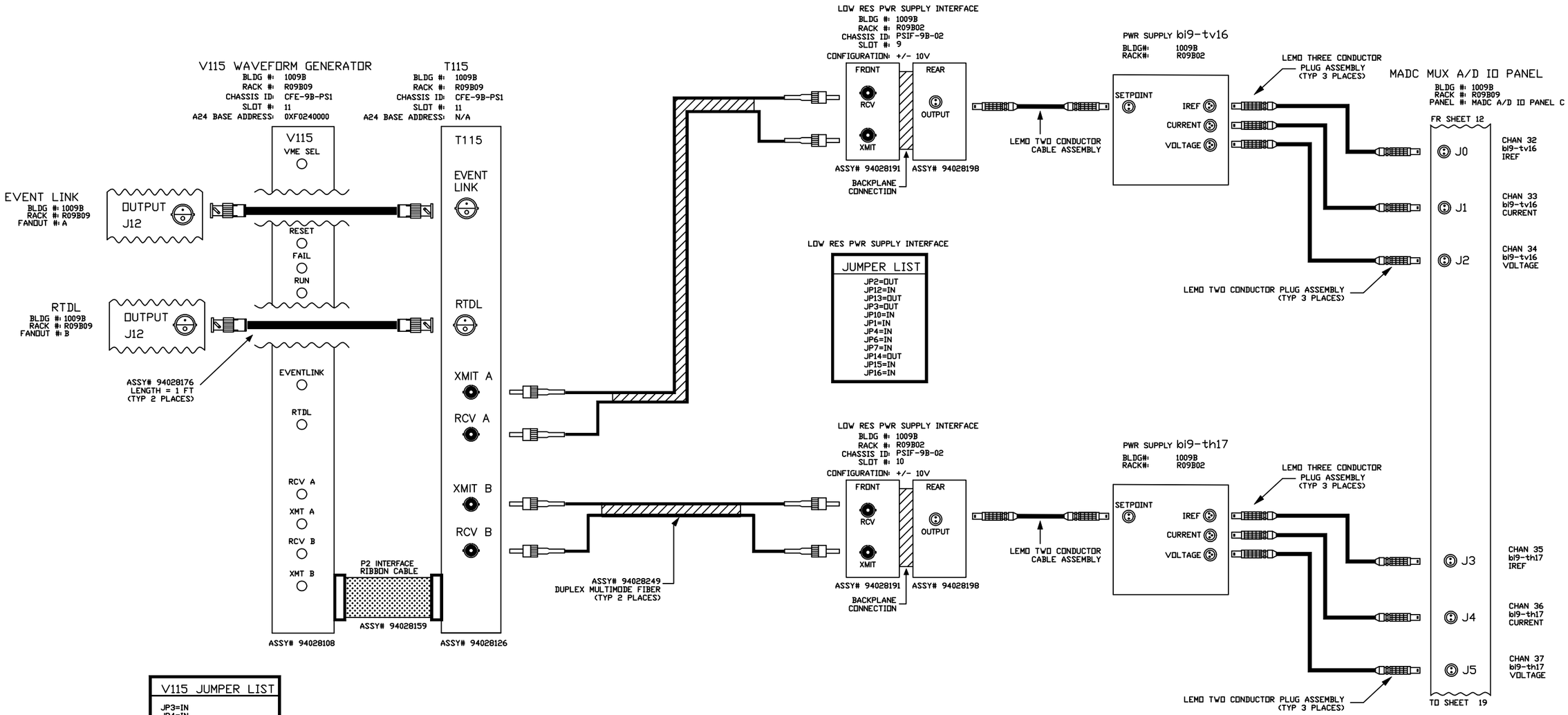

V115 JUMPER LIST
JP3=IN JP4=IN JP1=OUT JP2=OUT
A24 BASE ADDRESS JB1-A23=IN JB1-A22=IN JB1-A21=OUT JB1-A20=IN JB1-A19=IN JB1-A18=OUT

-3	-2	-1	REF DESIGNATOR	ITEM NO.	DESCRIPTION	MAT'L DWG NO./INL NO.
QTY REQD						

INTERPRET IN GENERAL ACCORDANCE WITH ASME Y14.24M-1989	Q.A. CATEGORY A-3	DATE	BROOKHAVEN NATIONAL LABORATORY
	DRAWN BY Ed Koropsak	3/17/98	UPTON, N.Y. 11973
UNLESS OTHERWISE SPECIFIED DIMENSIONS ARE IN INCHES	CHECKED BY		RHIC CONTROLS WIRING DIAGRAM
DECIMAL TOLERANCES .X ±.030 .XX ±.015 .XXX ±.005 ANGULAR TOLERANCE ± .5°	DESIGN APPROVAL		ALCOVE 1009B, CFE-9B-PS1
	ENGINEER APPROVAL R. MICHNOFF	3/17/98	POWER SUPPLY bi9-tv16/bi9-th17
	SUPVR. APPROVAL		SIZE D / 94028698 / REV. A
NA FINISH / BREAK SHARP EDGES MAX. XX MIN. XX	NEXT ASSEMBLY		DRAWING NUMBER
OUTSTANDING ECN			MATERIAL: ——— SCALE: NA WEIGHT: – SHEET 18

*AUTOCAD

CONTROLS- 6/17/03 3:59 PM 8698_19.dwg

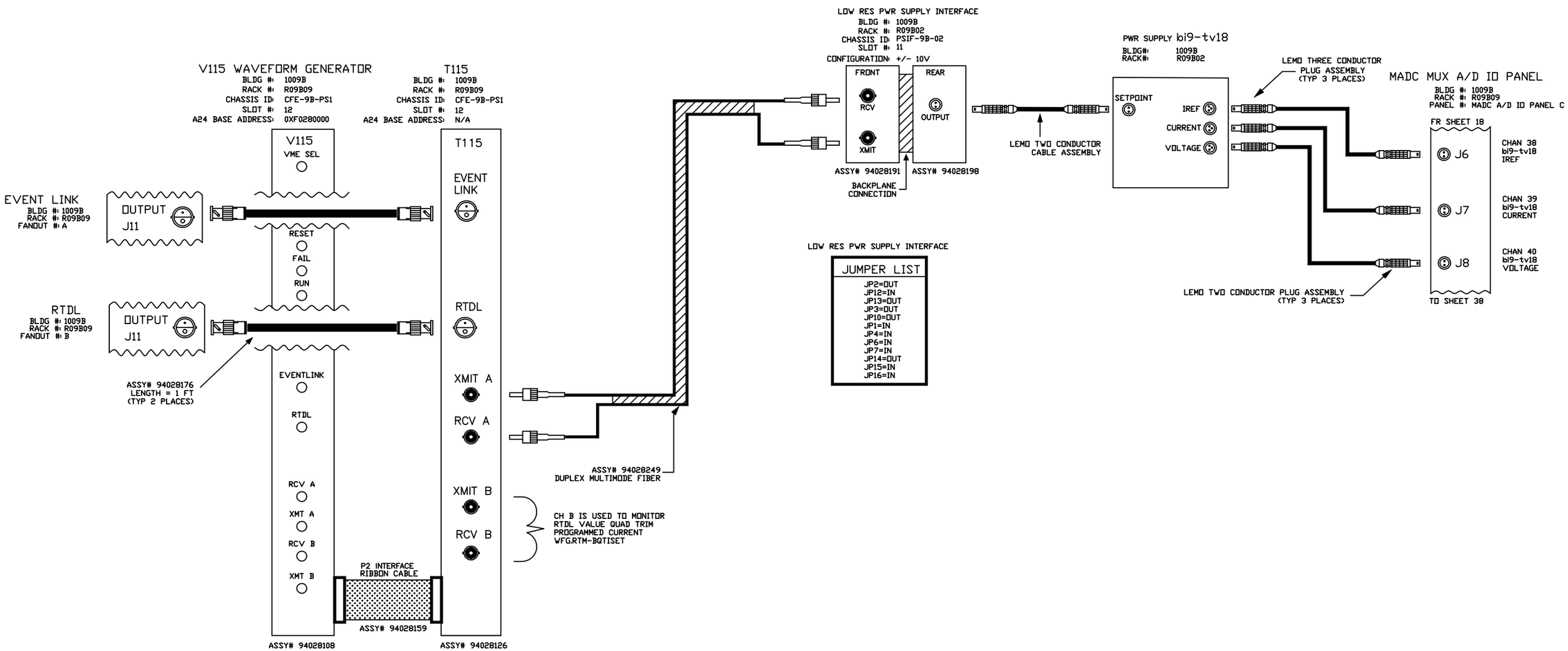

LOW RES PWR SUPPLY INTERFACE

JUMPER LIST
JP2=OUT
JP12=IN
JP13=OUT
JP3=OUT
JP10=OUT
JP1=IN
JP4=IN
JP6=IN
JP7=IN
JP14=OUT
JP15=IN
JP16=IN

V115 JUMPER LIST
JP3=IN JP4=IN JP1=OUT JP2=OUT
A24 BASE ADDRESS JB1-A23=IN JB1-A22=IN JB1-A21=OUT JB1-A20=IN JB1-A19=OUT JB1-A18=IN

REV.	ZONE	ECN NO.	DATE	BY	CKR	APP.

-3	-2	-1	REF DESIGNATOR	ITEM NO.	DESCRIPTION	MAT'L. DWG NO./INL NO.
QTY REQD						

INTERPRET IN GENERAL ACCORDANCE WITH ASME Y14.24M-1989

UNLESS OTHERWISE SPECIFIED DIMENSIONS ARE IN INCHES

DECIMAL TOLERANCES
X ±.030
.XX ±.015
.XXX ±.005
ANGULAR TOLERANCE
± .5°

NA FINISH

BREAK SHARP EDGES
MAX. XX MIN. XX

OUTSTANDING ECN

Q.A. CATEGORY A-3		DATE
DRAWN BY	Ed Koropsak	3/17/98
CHECKED BY		
DESIGN APPROVAL		
ENGINEER APPROVAL	R. MICHNOFF	3/17/98
SUPVR. APPROVAL		

NEXT ASSEMBLY

BROOKHAVEN NATIONAL LABORATORY
UPTON, N.Y. 11973

RHIC CONTROLS WIRING DIAGRAM
ALCOVE 1009B, CFE-9B-PS1
POWER SUPPLY bi9-tv18

SIZE D | DRAWING NUMBER 94028698 | REV. A

MATERIAL: ——— SCALE: NA WEIGHT: – SHEET 19

*AUTOCAD

CONTROLS- 6/17/03 4:06 PM 8698_20.dwg

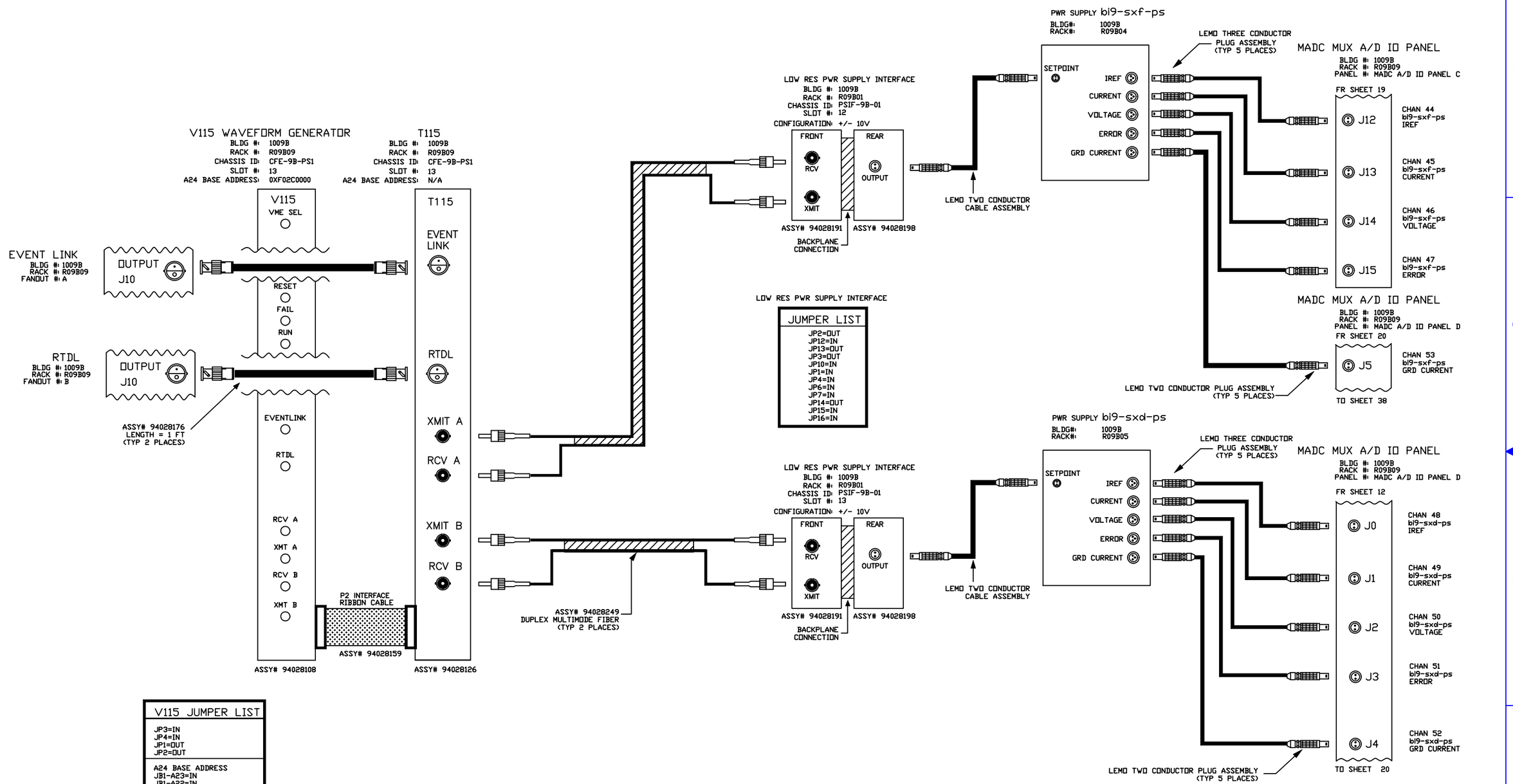

V115 JUMPER LIST
JP3=IN JP4=IN JP1=OUT JP2=OUT
A24 BASE ADDRESS JB1-A23=IN JB1-A22=IN JB1-A21=OUT JB1-A20=IN JB1-A19=OUT JB1-A18=OUT

REV.	ZONE	ECN NO.	DATE	BY	CKR	APP.

-3	-2	-1	REF DESIGNATOR	ITEM NO.	DESCRIPTION	MAT'L. DWG NO./BNL NO.
QTY REQD						

INTERPRET IN GENERAL ACCORDANCE WITH ASME Y14.24M-1989

UNLESS OTHERWISE SPECIFIED DIMENSIONS ARE IN INCHES

DECIMAL TOLERANCES
.X ±.030
.XX ±.015
.XXX ±.005
ANGULAR TOLERANCE ± .5°

OUTSTANDING ECN: NA

FINISH: NA

BREAK SHARP EDGES
MAX. XX MIN. XX

Q.A. CATEGORY A-3

DRAWN BY	Ed Koropsak	3/17/98
CHECKED BY		
DESIGN APPROVAL		
ENGINEER APPROVAL	R. MICHNOFF	3/17/98
SUPVR. APPROVAL		

NEXT ASSEMBLY

BROOKHAVEN NATIONAL LABORATORY
UPTON, N.Y. 11973

RHIC CONTROLS WIRING DIAGRAM
ALCOVE 1009B, CFE-9B-PS1
PWR SPLY bi9-sxf-ps/bi9-sxd-ps

SIZE D
DRAWING NUMBER 94028698
REV. A

MATERIAL: ——— SCALE: NA WEIGHT: – SHEET 20

*AUTOCAD

REV.	ZONE	ECN NO.	DATE	BY	CKR	APP.

CONTROLS- 6/17/03 4:08 PM 8698_21.dwg

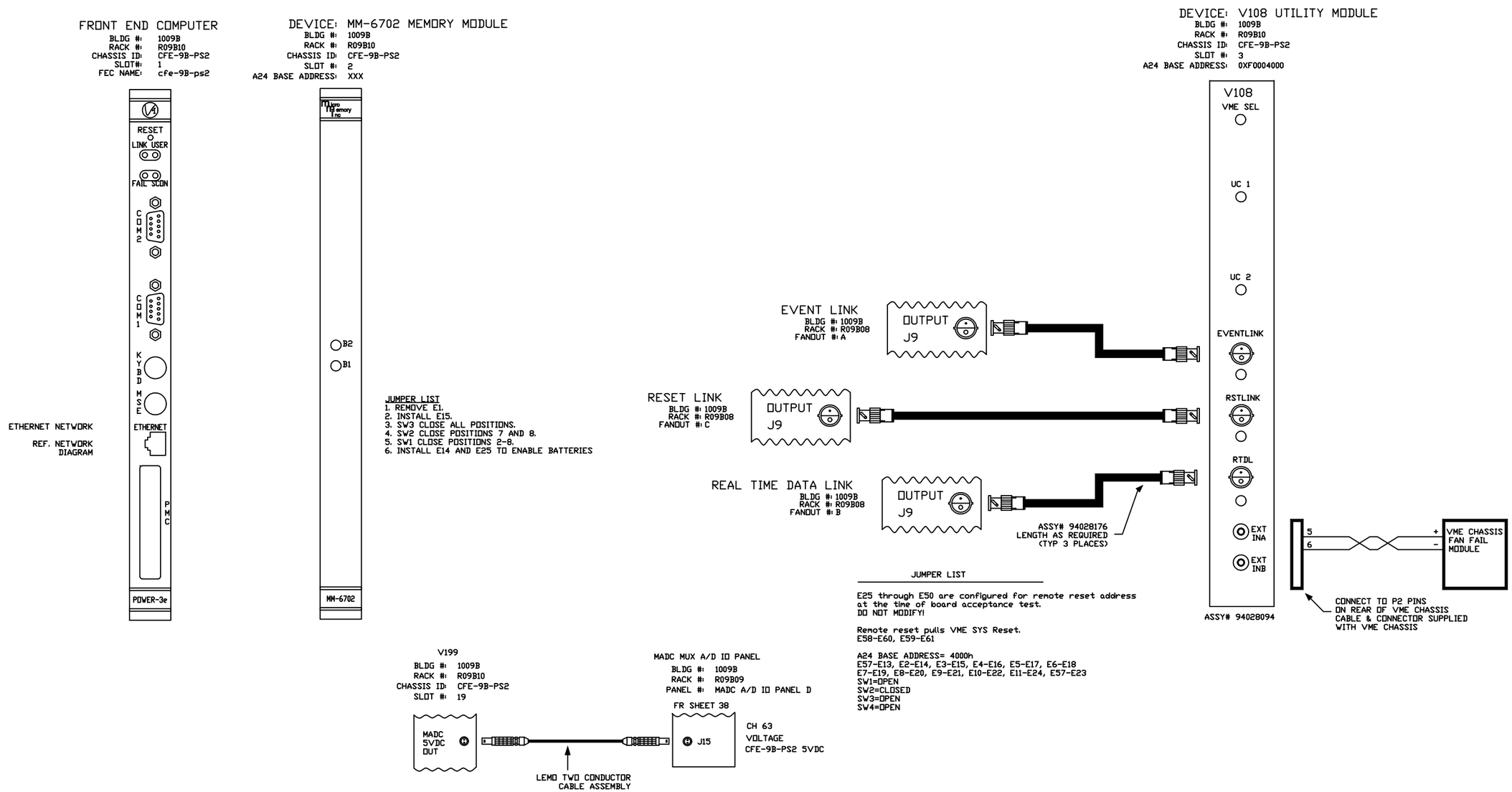

-3	-2	-1	REF DESIGNATOR	ITEM NO.	DESCRIPTION	MAT'L DWG NO.,BNL NO.
QTY REQD						

INTERPRET IN GENERAL ACCORDANCE WITH ASME Y14.24M-1989	Q.A. CATEGORY A-3	DATE	BROOKHAVEN NATIONAL LABORATORY ASSOCIATED UNIVERSITIES, INC. UPTON, N.Y. 11973
UNLESS OTHERWISE SPECIFIED DIMENSIONS ARE IN INCHES	DRAWN BY Venegas	8/13/99	RHIC CONTROLS WIRING DIAGRAM
DECIMAL TOLERANCES .X ±.030 .XX ±.015 .XXX ±.005 ANGULAR TOLERANCE ± .5°	CHECKED BY		ALCOVE 1009B, VME CHASSIS CFE-9B-PS2
	DESIGN APPROVAL		
	ENGINEER APPROVAL R. MICHNOFF	10/21/97	CPU/MEMORY /V108 UTIL MODULE
	SUPVR. APPROVAL		SIZE D — DRAWING NUMBER 94028698 — REV. A
OUTSTANDING ECN	NA FINISH	BREAK SHARP EDGES MAX. XX MIN. XX	NEXT ASSEMBLY
			MATERIAL: — SCALE: NA WEIGHT: — SHEET 21

*AUTOCAD

CONTROLS- 6/4/03 11:23 AM 8698_22.dwg

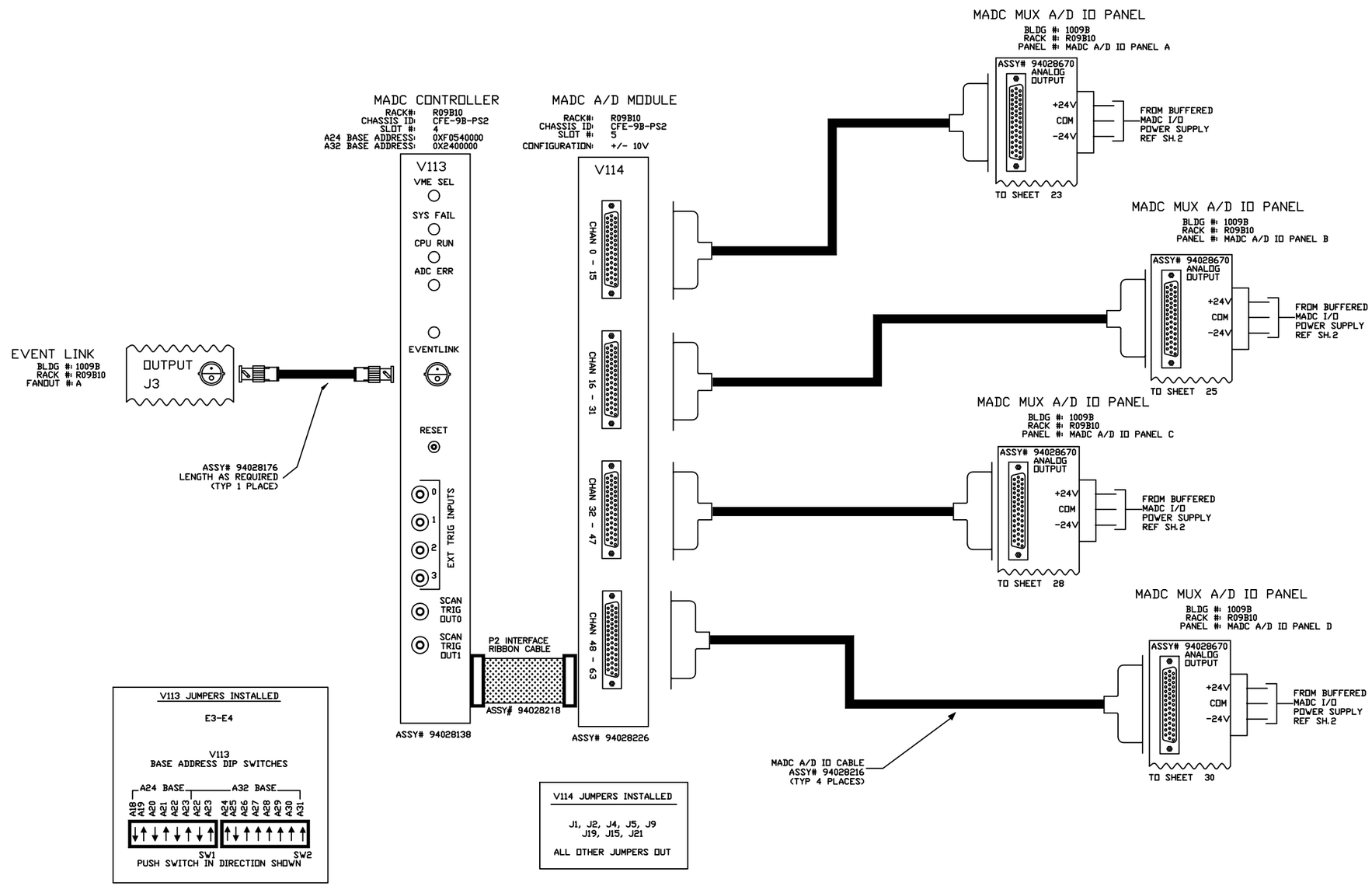

V113 JUMPERS INSTALLED

E3-E4

V113
BASE ADDRESS DIP SWITCHES

PUSH SWITCH IN DIRECTION SHOWN

V114 JUMPERS INSTALLED

J1, J2, J4, J5, J9
J19, J15, J21

ALL OTHER JUMPERS OUT

-3	-2	-1	REF DESIGNATOR	ITEM NO.	DESCRIPTION	MAT'L DWG NO./BHL NO.
QTY REQD						

INTERPRET IN GENERAL ACCORDANCE WITH ASME Y14.24M-1989

UNLESS OTHERWISE SPECIFIED DIMENSIONS ARE IN INCHES

DECIMAL TOLERANCES
.X ±.030
.XX ±.015
.XXX ±.005
ANGULAR TOLERANCE
± .5°

NA FINISH

BREAK SHARP EDGES
MAX. XX MIN. XX

OUTSTANDING ECN

Q.A. CATEGORY A-3

		DATE
DRAWN BY	Ed Koropsak	3/17/98
CHECKED BY		
DESIGN APPROVAL		
ENGINEER APPROVAL	R. MICHNOFF	3/17/98
SUPVR. APPROVAL		

NEXT ASSEMBLY

BROOKHAVEN NATIONAL LABORATORY
UPTON, N.Y. 11973

RHIC CONTROLS WIRING DIAGRAM

ALCOVE 1009B, VME CHASSIS CFE-9B-PS2

MADC SYSTEM

SIZE D

94028698 (DRAWING NUMBER)

REV. A

MATERIAL: ——— SCALE: FULL WEIGHT: – SHEET 22

*AUTOCAD

REV.	ZONE	ECN NO.	DATE	BY	CKR	APP.

CONTROLS- 6/18/03 8:08 AM 8698_23.dwg

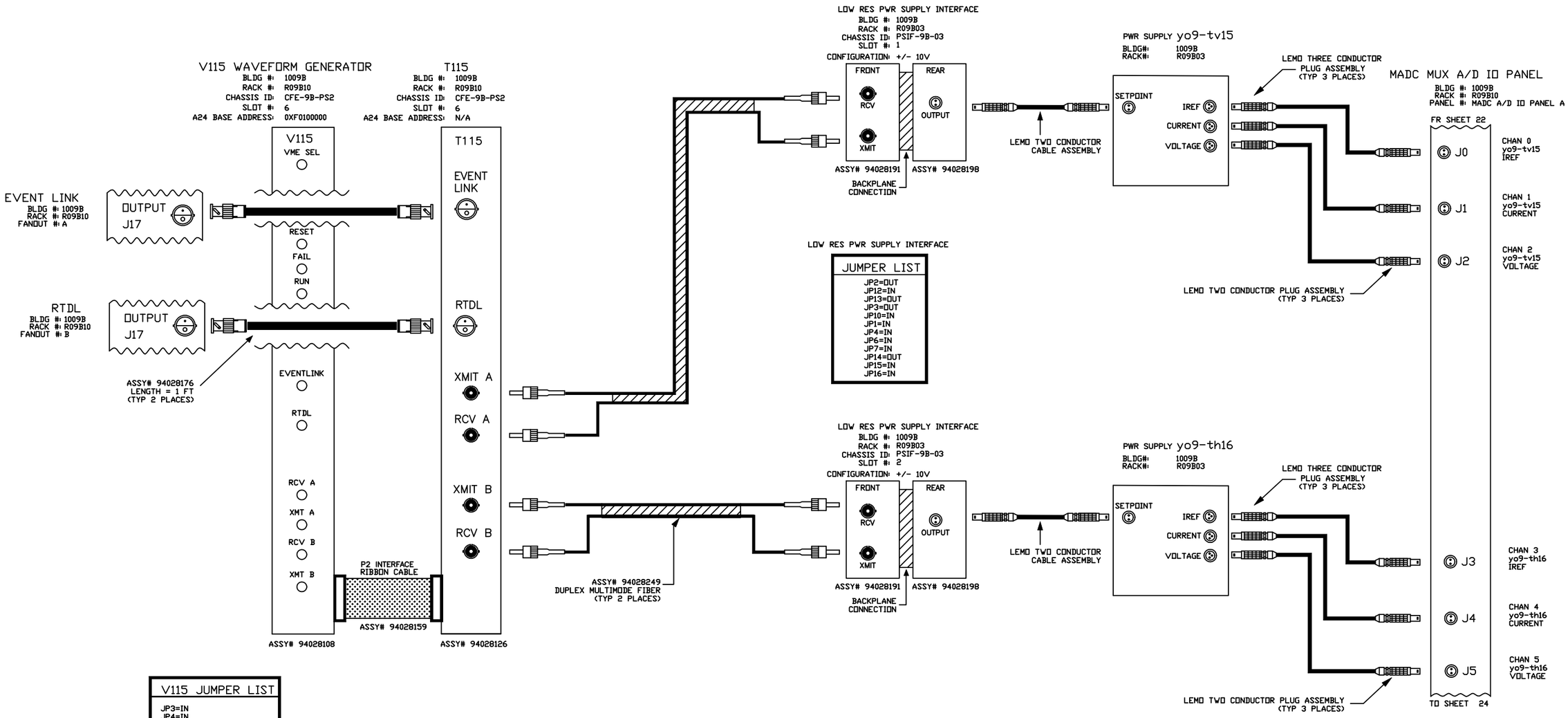

V115 JUMPER LIST
JP3=IN JP4=IN JP1=OUT JP2=OUT
A24 BASE ADDRESS JB1-A23=IN JB1-A22=IN JB1-A21=IN JB1-A20=OUT JB1-A19=IN JB1-A18=IN

-3	-2	-1	REF DESIGNATOR	ITEM NO.	DESCRIPTION	MAT'L DWG NO.,BNL NO.
QTY REQD						

INTERPRET IN GENERAL ACCORDANCE WITH ASME Y14.24M-1989	Q.A. CATEGORY A-3	DATE	BROOKHAVEN NATIONAL LABORATORY
	DRAWN BY Ed Koropsak	3/17/98	UPTON, N.Y. 11973
UNLESS OTHERWISE SPECIFIED DIMENSIONS ARE IN INCHES	CHECKED BY		RHIC CONTROLS WIRING DIAGRAM
DECIMAL TOLERANCES .X ±.030 .XX ±.015 .XXX ±.005 ANGULAR TOLERANCE ± .5°	DESIGN APPROVAL		ALCOVE 1009B, CFE-9B-PS2
	ENGINEER APPROVAL R. MICHNOFF	3/17/98	POWER SUPPLY yo9-tv15/yo8-th16
	SUPVR. APPROVAL		SIZE D / DRAWING NUMBER 94028698 / REV. A
NA FINISH / BREAK SHARP EDGES MAX. XX MIN. XX	NEXT ASSEMBLY		MATERIAL: ——— SCALE: NA WEIGHT: – SHEET 23
OUTSTANDING ECN			

*AUTOCAD

REV.	ZONE	ECN NO.	DATE	BY	CKR	APP.

CONTROLS- 6/18/03 8:10 AM 8698_24.dwg

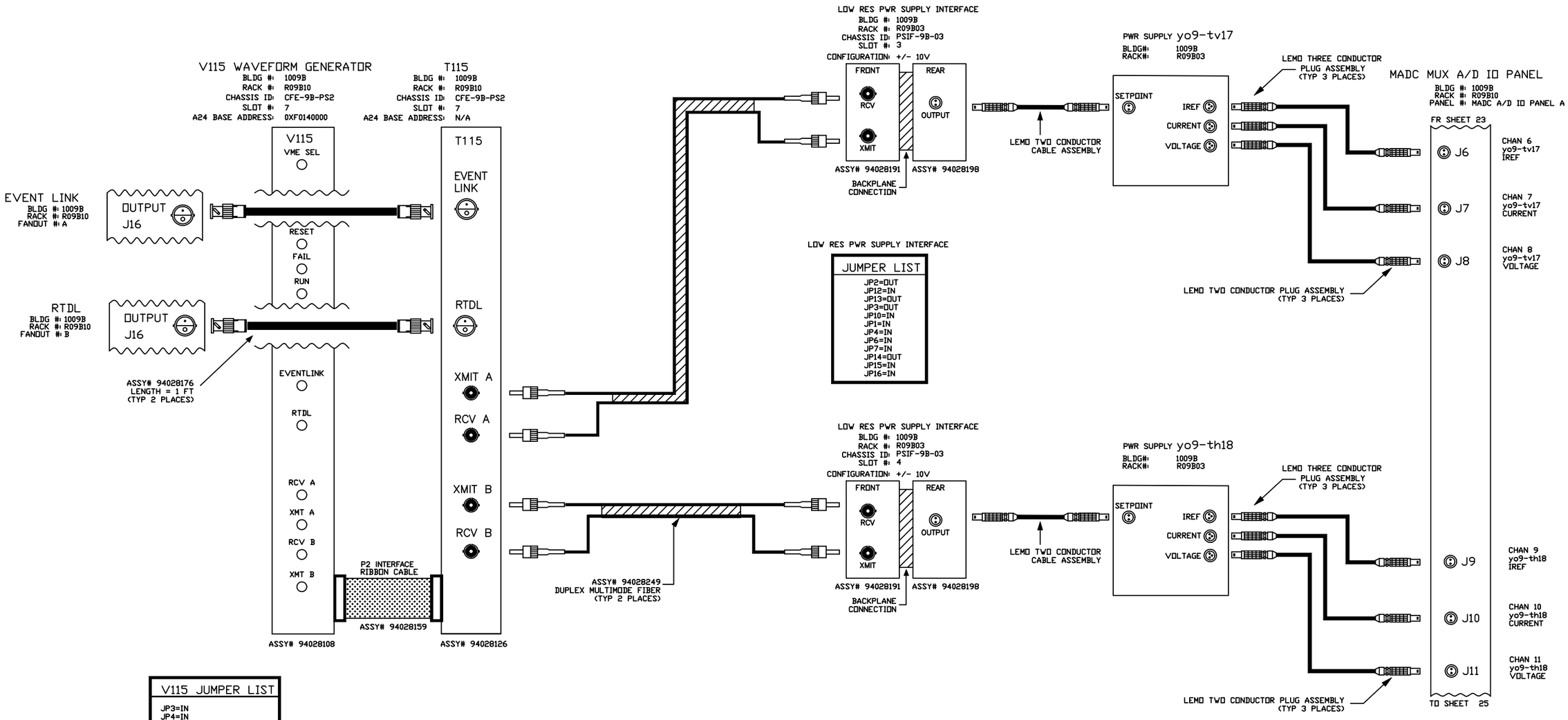

V115 JUMPER LIST
JP3=IN JP4=IN JP1=OUT JP2=OUT
A24 BASE ADDRESS JB1-A23=IN JB1-A22=IN JB1-A21=IN JB1-A20=OUT JB1-A19=IN JB1-A18=OUT

-3	-2	-1	REF DESIGNATOR	ITEM NO.	DESCRIPTION	MAT'L DWG NO.,SHL NO.
QTY REQD						

INTERPRET IN GENERAL ACCORDANCE WITH ASME Y14.24M-1989

UNLESS OTHERWISE SPECIFIED DIMENSIONS ARE IN INCHES

DECIMAL TOLERANCES
.X ±.030
.XX ±.015
.XXX ±.005
ANGULAR TOLERANCE
± .5°

NA FINISH

BREAK SHARP EDGES
MAX. XX MIN. XX

OUTSTANDING ECN

Q.A. CATEGORY A-3		DATE
DRAWN BY	Ed Koropsak	3/17/98
CHECKED BY		
DESIGN APPROVAL		
ENGINEER APPROVAL	R. MICHNOFF	3/17/98
SUPVR. APPROVAL		

NEXT ASSEMBLY

BROOKHAVEN NATIONAL LABORATORY
UPTON, N.Y. 11973

RHIC CONTROLS WIRING DIAGRAM
ALCOVE 1009B, CFE-9B-PS2
POWER SUPPLY yo9-tv17/yo9-th18

SIZE D | DRAWING NUMBER 94028698 | REV. A

MATERIAL: ——— SCALE: NA WEIGHT: – SHEET 24

*AUTOCAD

REV.	ZONE	ECN NO.	DATE	BY	CKR	APP.

CONTROLS- 6/18/03 8:11 AM 8698_25.dwg

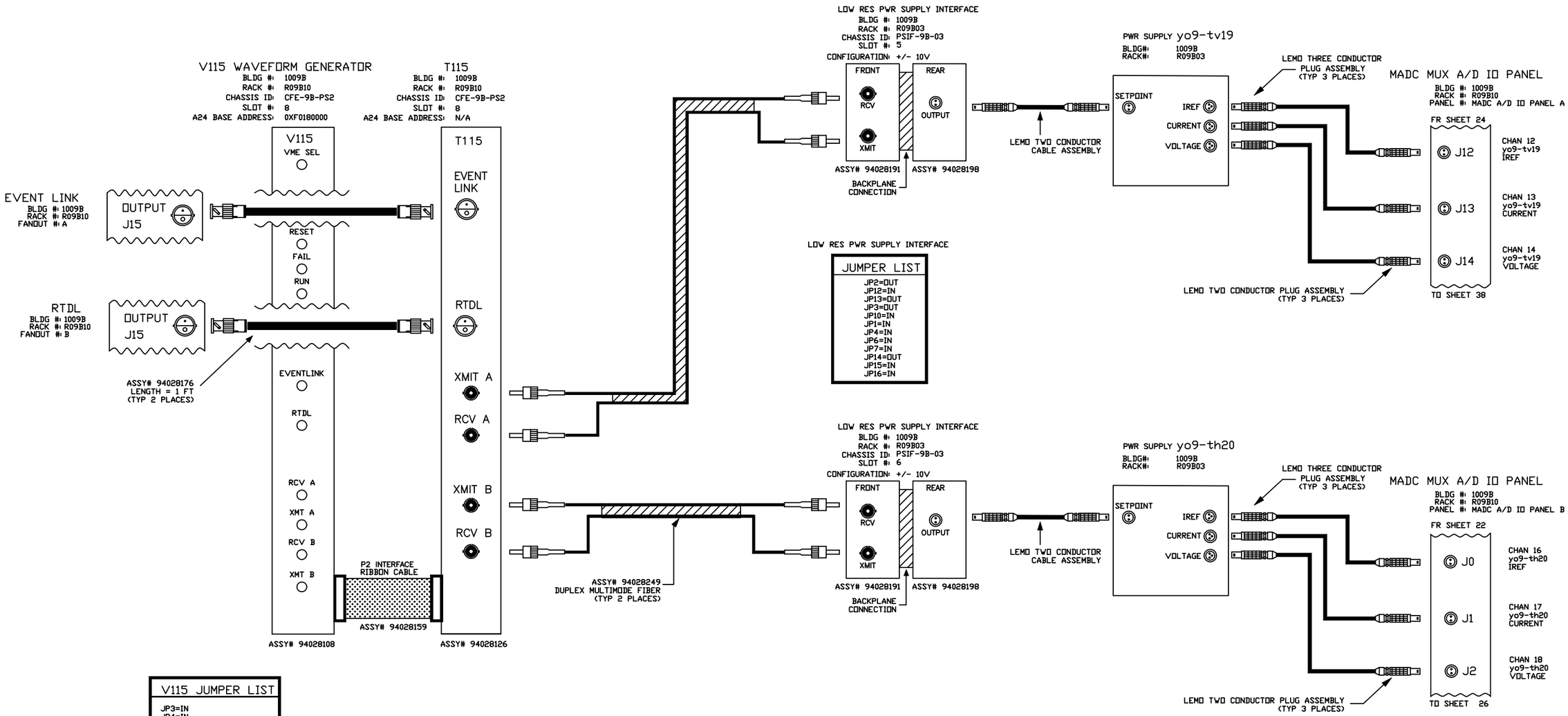

V115 JUMPER LIST
JP3=IN JP4=IN JP1=OUT JP2=OUT
A24 BASE ADDRESS JB1-A23=IN JB1-A22=IN JB1-A21=IN JB1-A20=OUT JB1-A19=OUT JB1-A18=IN

-3	-2	-1	REF DESIGNATOR	ITEM NO.	DESCRIPTION	MAT'L DWG NO./INL NO.
QTY REQD						

INTERPRET IN GENERAL ACCORDANCE WITH ASME Y14.24M-1989

UNLESS OTHERWISE SPECIFIED DIMENSIONS ARE IN INCHES

DECIMAL TOLERANCES
.X ±.030
.XX ±.015
.XXX ±.005
ANGULAR TOLERANCE
± .5°

NA FINISH

BREAK SHARP EDGES MAX. XX MIN. XX

OUTSTANDING ECN

Q.A. CATEGORY A-3		DATE
DRAWN BY	Ed Koropsak	3/17/98
CHECKED BY		
DESIGN APPROVAL		
ENGINEER APPROVAL	R. MICHNOFF	3/17/98
SUPVR. APPROVAL		

NEXT ASSEMBLY

BROOKHAVEN NATIONAL LABORATORY
UPTON, N.Y. 11973

RHIC CONTROLS WIRING DIAGRAM
ALCOVE 1009B, CFE-9B-PS2
POWER SUPPLY yo9-tv19/yo9-th20

SIZE D | DRAWING NUMBER 94028698 | REV. A

MATERIAL: ——— SCALE: NA WEIGHT: – SHEET 25

*AUTOCAD

REV.	ZONE	ECN NO.	DATE	BY	CKR	APP.

CONTROLS- 6/18/03 8:17 AM 8698_26.dwg

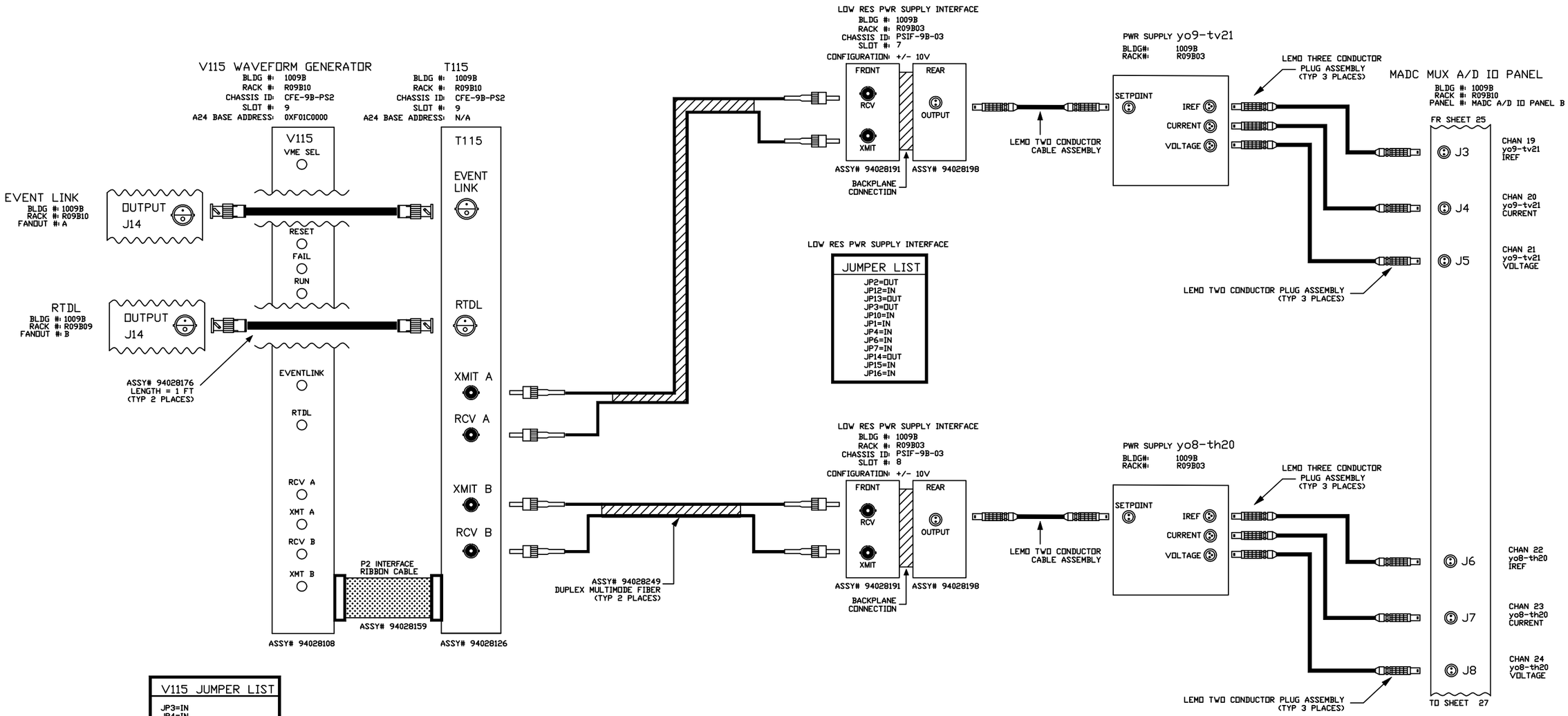

V115 JUMPER LIST
JP3=IN JP4=IN JP1=OUT JP2=OUT
A24 BASE ADDRESS JB1-A23=IN JB1-A22=IN JB1-A21=IN JB1-A20=OUT JB1-A19=OUT JB1-A18=OUT

-3	-2	-1	REF DESIGNATOR	ITEM NO.	DESCRIPTION	MAT'L DWG NO./INL NO.
QTY REQD						

INTERPRET IN GENERAL ACCORDANCE WITH ASME Y14.24M-1989

UNLESS OTHERWISE SPECIFIED DIMENSIONS ARE IN INCHES

DECIMAL TOLERANCES
.X ±.030
.XX ±.015
.XXX ±.005
ANGULAR TOLERANCE
± .5°

NA FINISH

BREAK SHARP EDGES
MAX. XX MIN. XX

OUTSTANDING ECN

Q.A. CATEGORY A-3		DATE
DRAWN BY	Ed Koropsak	3/17/98
CHECKED BY		
DESIGN APPROVAL		
ENGINEER APPROVAL	R. MICHNOFF	3/17/98
SUPVR. APPROVAL		

NEXT ASSEMBLY

BROOKHAVEN NATIONAL LABORATORY
UPTON, N.Y. 11973

RHIC CONTROLS WIRING DIAGRAM
BLDG. 1009B, CFE-9B-PS2

POWER SUPPLY yo9-tv21/yo8-th20

SIZE D | DRAWING NUMBER 94028698 | REV. A

MATERIAL: ——— SCALE: NA WEIGHT: – SHEET 26

*AUTOCAD

REV.	ZONE	ECN NO.	DATE	BY	CKR	APP.

CONTROLS- 6/18/03 8:18 AM 8698_27.dwg

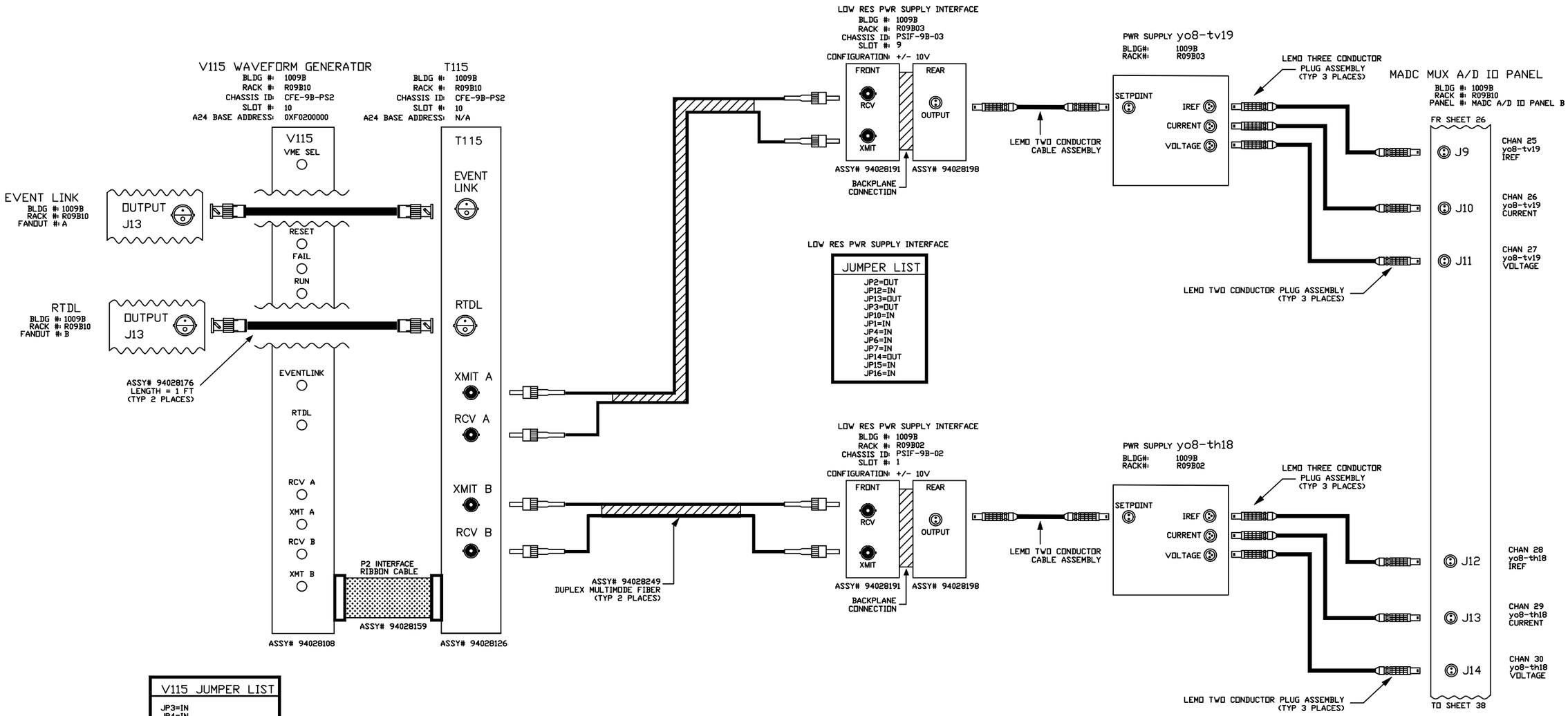

V115 JUMPER LIST
JP3=IN JP4=IN JP1=OUT JP2=OUT
A24 BASE ADDRESS JB1-A23=IN JB1-A22=IN JB1-A21=OUT JB1-A20=IN JB1-A19=IN JB1-A18=IN

-3	-2	-1	REF DESIGNATOR	ITEM NO.	DESCRIPTION	MAT'L DWG NO.,SHL NO.
QTY REQD						

INTERPRET IN GENERAL ACCORDANCE WITH ASME Y14.24M-1989

UNLESS OTHERWISE SPECIFIED DIMENSIONS ARE IN INCHES

DECIMAL TOLERANCES
.X ±.030
.XX ±.015
.XXX ±.005
ANGULAR TOLERANCE
± .5°

NA FINISH

BREAK SHARP EDGES
MAX. XX MIN. XX

OUTSTANDING ECN

Q.A. CATEGORY A-3		DATE
DRAWN BY	Ed Koropsak	3/18/98
CHECKED BY		
DESIGN APPROVAL		
ENGINEER APPROVAL	R. MICHNOFF	3/18/98
SUPVR. APPROVAL		

NEXT ASSEMBLY

BROOKHAVEN NATIONAL LABORATORY
UPTON, N.Y. 11973

RHIC CONTROLS WIRING DIAGRAM
ALCOVE 1009B, CFE-9B-PS2
POWER SUPPLY yo8-tv19/yo8-th18

SIZE D
DRAWING NUMBER 94028698
REV. A

MATERIAL: ——— SCALE: NA WEIGHT: – SHEET 27

*AUTOCAD

REV.	ZONE	ECN NO.	DATE	BY	CKR	APP.

CONTROLS- 6/18/03 8:20 AM 8698_28.dwg

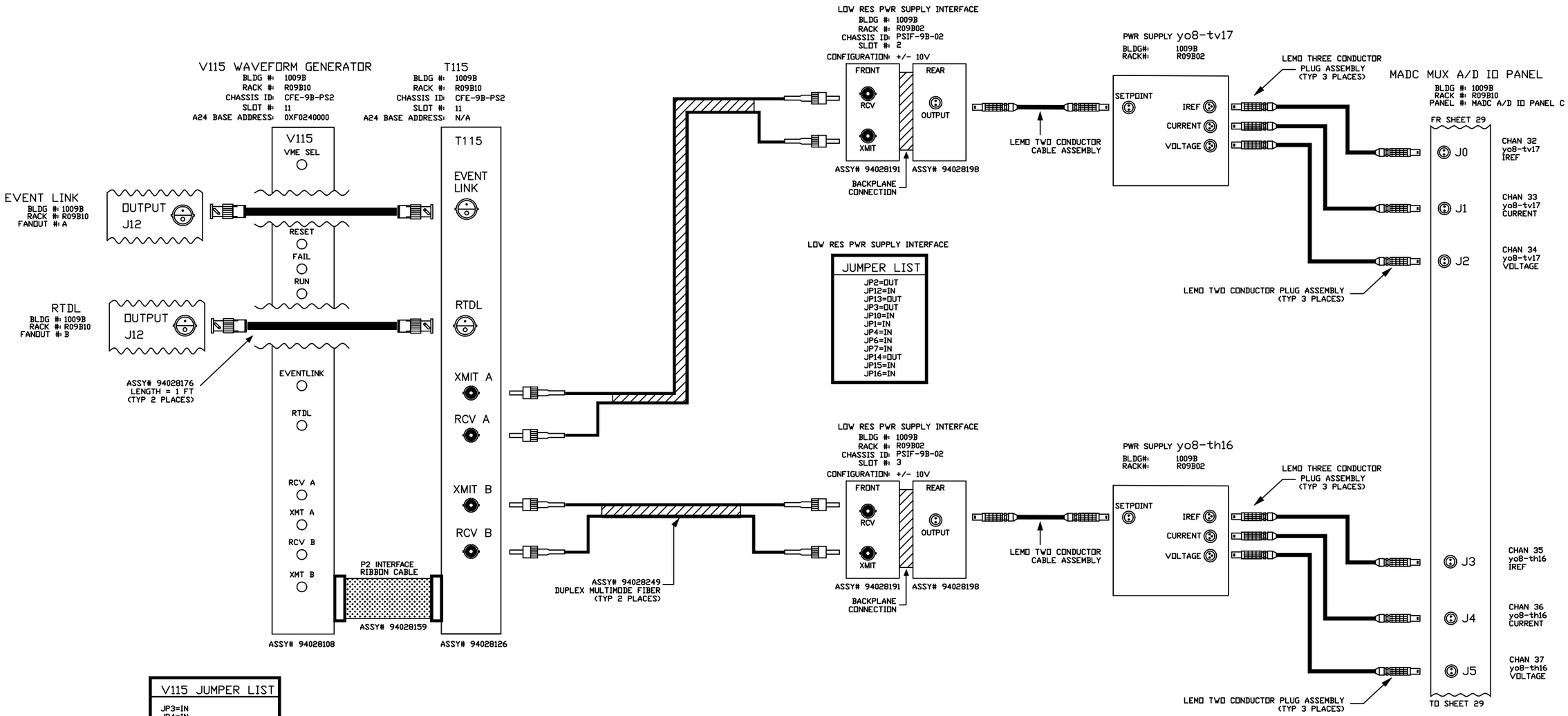

V115 JUMPER LIST
JP3=IN JP4=IN JP1=OUT JP2=OUT
A24 BASE ADDRESS JB1-A23=IN JB1-A22=IN JB1-A21=OUT JB1-A20=IN JB1-A19=IN JB1-A18=OUT

-3	-2	-1	REF DESIGNATOR	ITEM NO.	DESCRIPTION	MAT'L DWG NO.,SPEC NO.
QTY REQD						

INTERPRET IN GENERAL ACCORDANCE WITH ASME Y14.24M-1989

UNLESS OTHERWISE SPECIFIED DIMENSIONS ARE IN INCHES

DECIMAL TOLERANCES .X ±.030 .XX ±.015 .XXX ±.005 ANGULAR TOLERANCE ± .5°

FINISH NA BREAK SHARP EDGES MAX. XX MIN. XX

OUTSTANDING ECN

Q.A. CATEGORY A-3

		DATE
DRAWN BY	Ed Koropsak	3/18/98
CHECKED BY		
DESIGN APPROVAL		
ENGINEER APPROVAL	R. MICHNOFF	3/18/98
SUPVR. APPROVAL		

NEXT ASSEMBLY

BROOKHAVEN NATIONAL LABORATORY
UPTON, N.Y. 11973

RHIC CONTROLS WIRING DIAGRAM
ALCOVE 1009B, CFE-9B-PS2
POWER SUPPLY yo8-tv17/yo8-th16

SIZE D DRAWING NUMBER 94028698 REV. A

MATERIAL: ——— SCALE: NA WEIGHT: – SHEET 28

*AUTOCAD

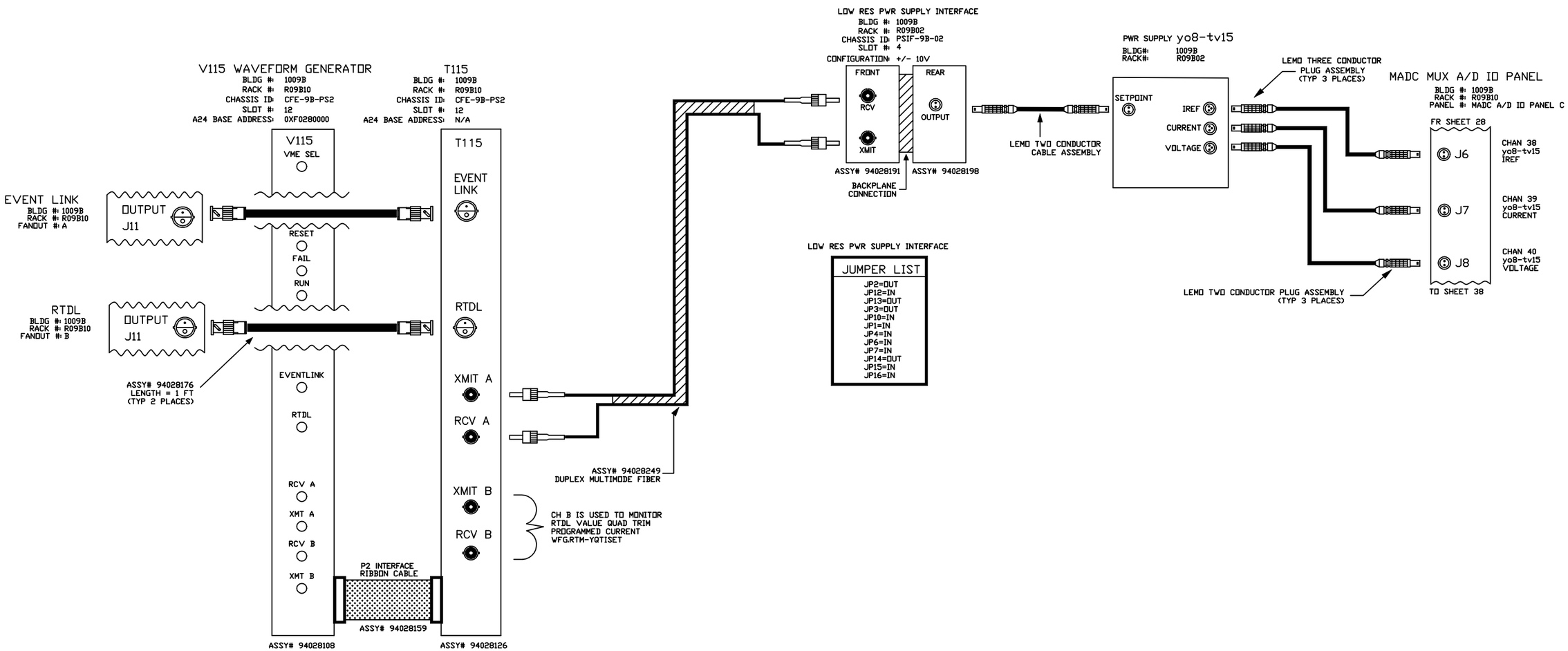

LOW RES PWR SUPPLY INTERFACE

JUMPER LIST
JP2=OUT
JP12=IN
JP13=OUT
JP3=OUT
JP10=IN
JP1=IN
JP4=IN
JP6=IN
JP7=IN
JP14=OUT
JP15=IN
JP16=IN

V115 JUMPER LIST
JP3=IN JP4=IN JP1=OUT JP2=OUT
A24 BASE ADDRESS JB1-A23=IN JB1-A22=IN JB1-A21=OUT JB1-A20=IN JB1-A19=OUT JB1-A18=IN

REV.	ZONE	ECN NO.	DATE	BY	CKR	APP.

-3	-2	-1	REF DESIGNATOR	ITEM NO.	DESCRIPTION	MAT'L. DWG NO./INL NO.
QTY REQD						

INTERPRET IN GENERAL ACCORDANCE WITH ASME Y14.24M-1989

UNLESS OTHERWISE SPECIFIED DIMENSIONS ARE IN INCHES

DECIMAL TOLERANCES
.X ±.030
.XX ±.015
.XXX ±.005
ANGULAR TOLERANCE
± .5°

NA FINISH — BREAK SHARP EDGES — MAX. XX MIN. XX

OUTSTANDING ECN

Q.A. CATEGORY A-3		DATE
DRAWN BY	Ed Koropsak	3/18/98
CHECKED BY		
DESIGN APPROVAL		
ENGINEER APPROVAL	R. MICHNOFF	3/18/98
SUPVR. APPROVAL		

NEXT ASSEMBLY

BROOKHAVEN NATIONAL LABORATORY
[redacted]
UPTON, N.Y. 11973

RHIC CONTROLS WIRING DIAGRAM

ALCOVE 1009B, CFE-9B-PS2

POWER SUPPLY yo8-tv15

SIZE D — DRAWING NUMBER 94028698 — REV. A

MATERIAL: ——— SCALE: NA WEIGHT: – SHEET 29

*AUTOCAD

REV.	ZONE	ECN NO.	DATE	BY	CKR	APP.

CONTROLS- 6/18/03 8:34 AM 8698_30.dwg

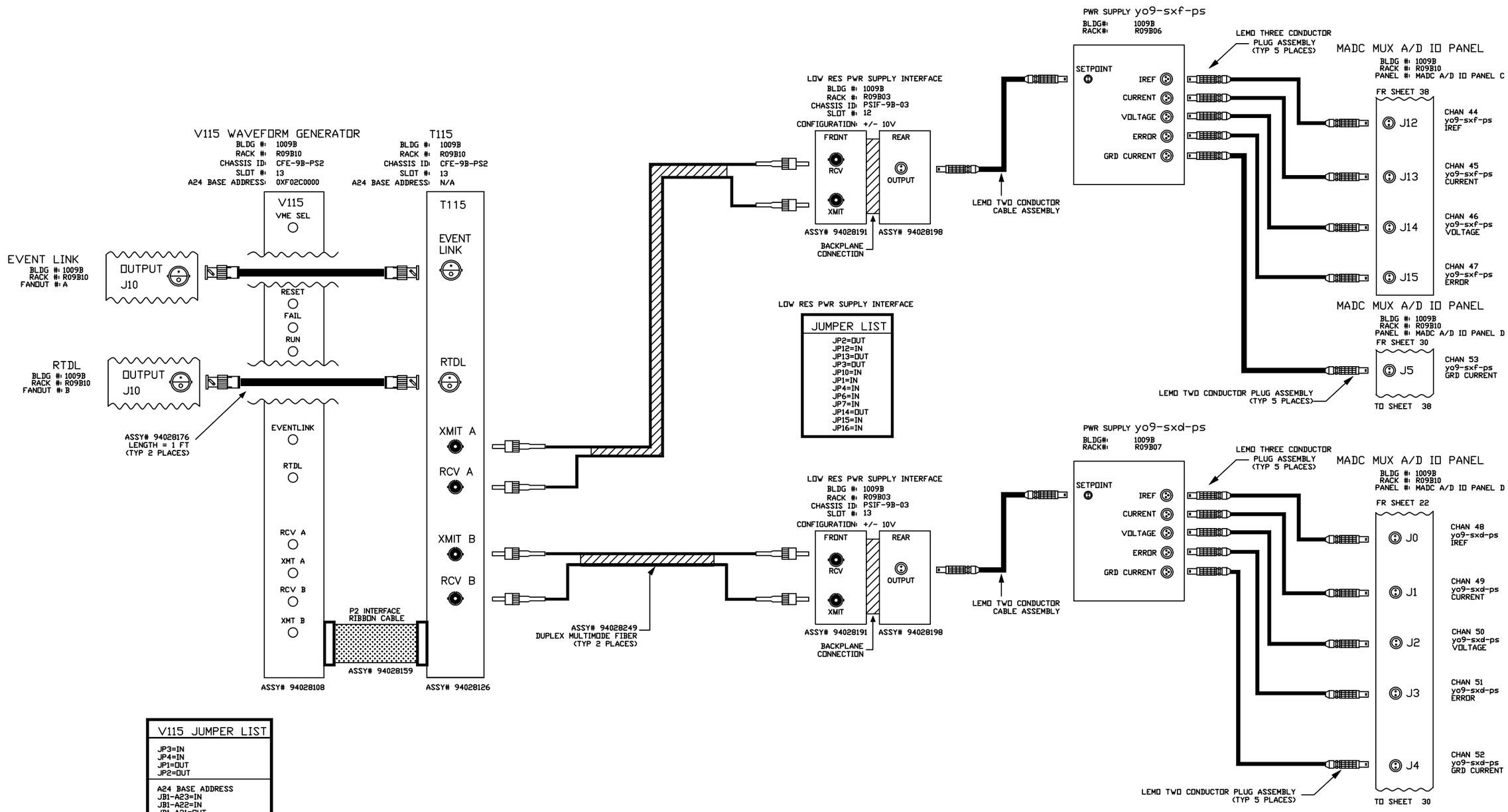

V115 JUMPER LIST
JP3=IN JP4=IN JP1=OUT JP2=OUT
A24 BASE ADDRESS JB1-A23=IN JB1-A22=IN JB1-A21=OUT JB1-A20=IN JB1-A19=OUT JB1-A18=OUT

-3	-2	-1	REF DESIGNATOR	ITEM NO.	DESCRIPTION	MAT'L DWG NO./INL NO.
QTY REQD						

INTERPRET IN GENERAL ACCORDANCE WITH ASME Y14.24M-1989

UNLESS OTHERWISE SPECIFIED DIMENSIONS ARE IN INCHES

DECIMAL TOLERANCES
.X ±.030
.XX ±.015
.XXX ±.005
ANGULAR TOLERANCE ± .5°

OUTSTANDING ECN

NA FINISH

BREAK SHARP EDGES
MAX. XX MIN. XX

Q.A. CATEGORY A-3		DATE
DRAWN BY	Ed Koropsak	3/18/98
CHECKED BY		
DESIGN APPROVAL		
ENGINEER APPROVAL	R. MICHNOFF	3/18/98
SUPVR. APPROVAL		
NEXT ASSEMBLY		

BROOKHAVEN NATIONAL LABORATORY
UPTON, N.Y. 11973

RHIC CONTROLS WIRING DIAGRAM
ALCOVE 1009B, CFE-9B-PS2
PWR SPLY yo9-sxf-ps/yo9-sxd-ps

SIZE D
DRAWING NUMBER 94028698
REV. A

MATERIAL: ——— SCALE: NA WEIGHT: – SHEET 30

*AUTOCAD

REV.	ZONE	ECN NO.	DATE	BY	CKR	APP.

VME PLC V984
BLDG #: 1009B
RACK #: R05B10
CHASSIS ID: CFE-9B-PS2
SLOT #: 21
NA BASE ADDRESS: NA

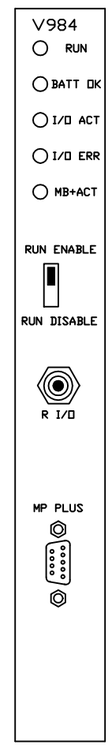

-3	-2	-1	REF DESIGNATOR	ITEM NO.	DESCRIPTION	MAT'L. DWG NO.,SPEC. NO.
QTY REQD						

INTERPRET IN GENERAL ACCORDANCE WITH ASME Y14.24M-1989

UNLESS OTHERWISE SPECIFIED DIMENSIONS ARE IN INCHES

DECIMAL TOLERANCES
.X ±.030
.XX ±.015
.XXX ±.005
ANGULAR TOLERANCE
± .5°

NA FINISH

BREAK SHARP EDGES
MAX. XX MIN. XX

OUTSTANDING ECN

Q.A. CATEGORY A-3		DATE
DRAWN BY	Ed Koropsak	3/18/98
CHECKED BY		
DESIGN APPROVAL		
ENGINEER APPROVAL	R. MICHNOFF	3/18/98
SUPVR. APPROVAL		
NEXT ASSEMBLY		

BROOKHAVEN NATIONAL LABORATORY
[redacted]
UPTON, N.Y. 11973

RHIC CONTROLS WIRING DIAGRAM
ALCOVE 1009B CHASSIS CFE-9B-PS2
MODICON VME PLC

SIZE D
94028698
DRAWING NUMBER
REV. A

MATERIAL: ——— SCALE: NA WEIGHT: – SHEET 32 OF 38

*AUTOCAD

REV.	ZONE	ECN NO.	DATE	BY	CKR	APP.

V102 DELAY MODULE
BLDG #: 1009B
RACK #: R09B09
CHASSIS ID: CFE-9B-PS2
SLOT #: 7
A16 BASE ADDRESS: 0XFFFFE600

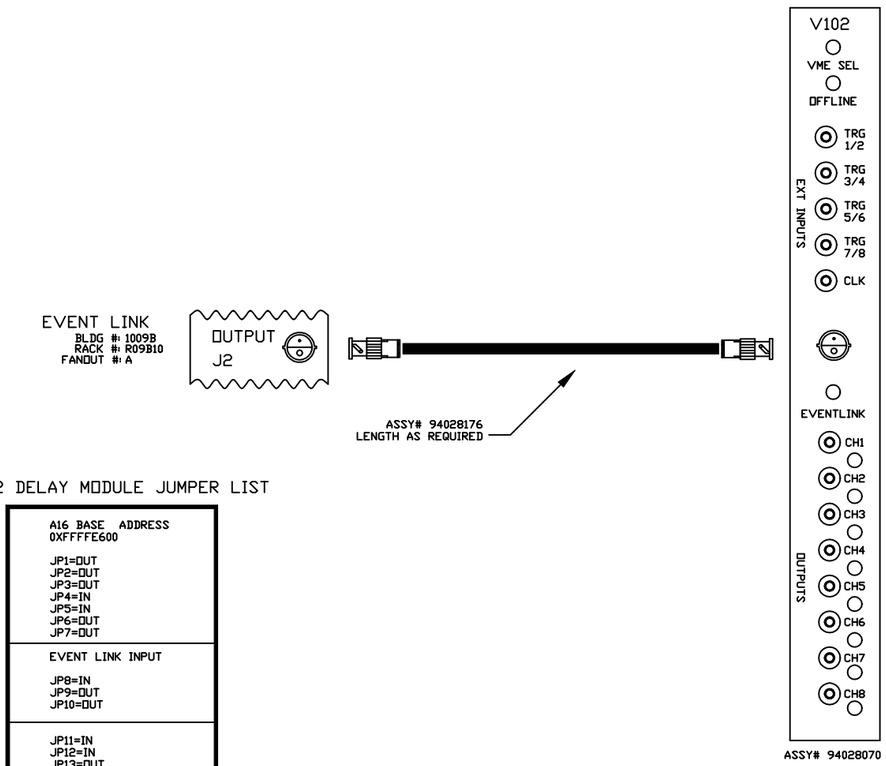

V102 DELAY MODULE JUMPER LIST

A16 BASE ADDRESS 0XFFFFE600 JP1=OUT JP2=OUT JP3=OUT JP4=IN JP5=IN JP6=OUT JP7=OUT
EVENT LINK INPUT JP8=IN JP9=OUT JP10=OUT
JP11=IN JP12=IN JP13=OUT JP14=IN

-3	-2	-1	REF DESIGNATOR	ITEM NO.	DESCRIPTION	MAT'L DWG NO.,BNL NO.
QTY REQD						

INTERPRET IN GENERAL ACCORDANCE WITH ASME Y14.24M-1989

UNLESS OTHERWISE SPECIFIED DIMENSIONS ARE IN INCHES

DECIMAL TOLERANCES
.X ±.030
.XX ±.015
.XXX ±.005
ANGULAR TOLERANCE
± .5°

FINISH: NA

BREAK SHARP EDGES
MAX. XX MIN. XX

OUTSTANDING ECN

Q.A. CATEGORY A-3		DATE
DRAWN BY	Ed Koropsak	3/18/98
CHECKED BY		
DESIGN APPROVAL		
ENGINEER APPROVAL	R. MICHNOFF	3/18/98
SUPVR. APPROVAL		

NEXT ASSEMBLY

BROOKHAVEN NATIONAL LABORATORY
UPTON, N.Y. 11973

RHIC CONTROLS WIRING DIAGRAM
ALCOVE 1009B CHASSIS CFE-9B-PS2
V102 DELAY MODULE

SIZE: D
DRAWING NUMBER: 94028698
REV.: A

MATERIAL: ———— SCALE: NA WEIGHT: – SHEET 33 OF 38

*AUTOCAD

REV.	ZONE	ECN NO.	DATE	BY	CKR	APP.

Controls 8/13/99 9:27 AM 8698_36.dwg

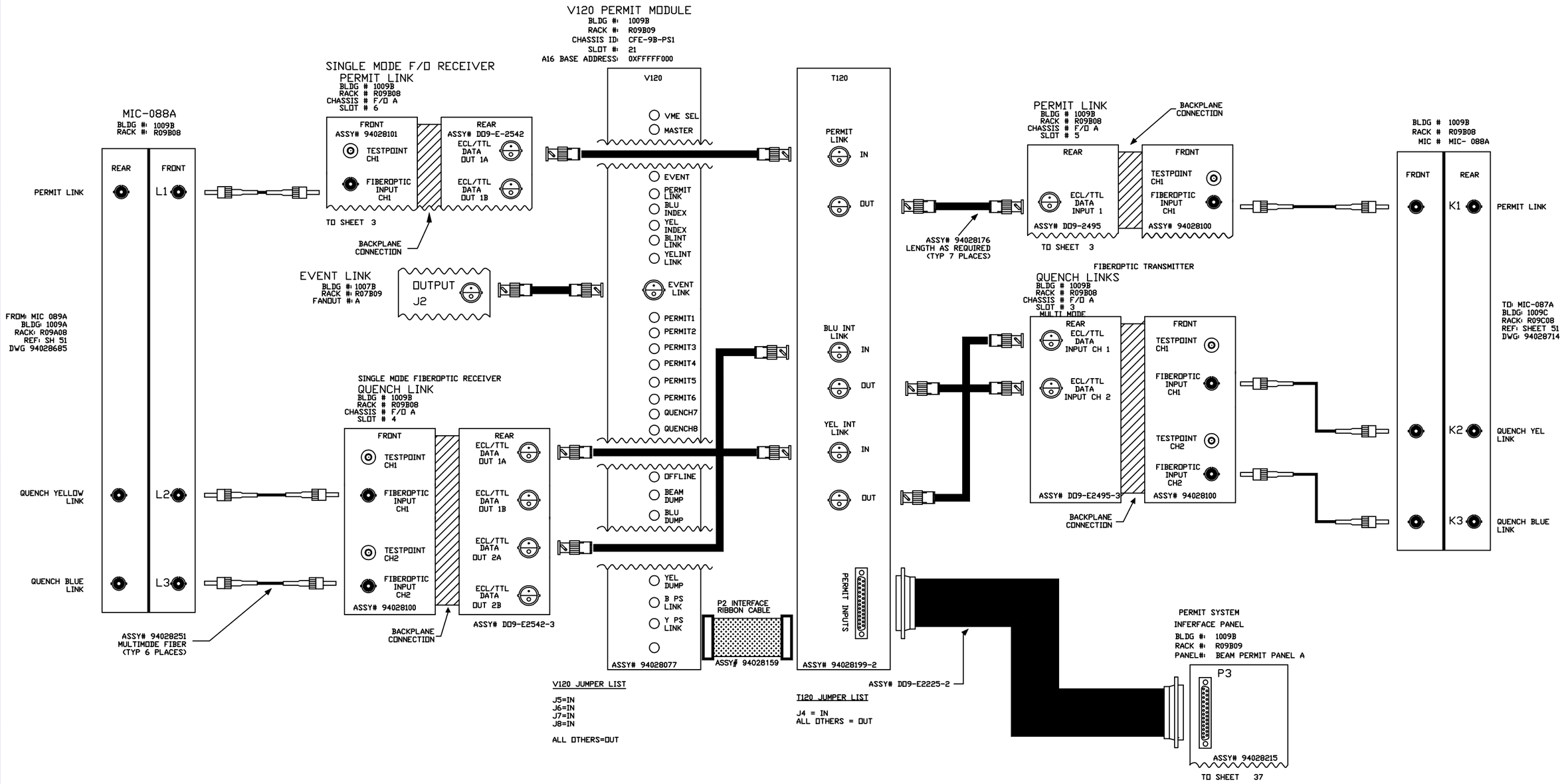

-3	-2	-1	REF DESIGNATOR	ITEM NO.	DESCRIPTION	MAT'L. DWG NO./BNL NO.
QTY REQD						

INTERPRET IN GENERAL ACCORDANCE WITH ASME Y14.24M-1989

UNLESS OTHERWISE SPECIFIED DIMENSIONS ARE IN INCHES

DECIMAL TOLERANCES
X ±.030
.XX ±.015
.XXX ±.005
ANGULAR TOLERANCE ± .5°

NA FINISH

BREAK SHARP EDGES MAX. XX MIN. XX

OUTSTANDING ECN

Q.A. CATEGORY A-3

		DATE
DRAWN BY	Ed Koropsak	3/18/98
CHECKED BY		
DESIGN APPROVAL		
ENGINEER APPROVAL	R. MICHNOFF	3/18/98
SUPVR. APPROVAL		

NEXT ASSEMBLY

BROOKHAVEN NATIONAL LABORATORY
UPTON, N.Y. 11973

RHIC CONTROLS WIRING DIAGRAM

ALCOVE 1009B, CHASSIS CFE-9B-PS1

V120/T120 PERMIT SYSTEM

SIZE D — DRAWING NUMBER 94028698 — REV. A

MATERIAL: ——— SCALE: NA WEIGHT: — SHEET 36 OF 38

1 *AUTOCAD

REV.	ZONE	ECN NO.	DATE	BY	CKR	APP.

CONTROLS- 6/4/03 11:48 AM 8698_37.dwg

PERMIT SYSTEM INTERFACE MODULE

BLDG #: 1009B
RACK #: R09B09
PANEL #: PERMIT I/F PANEL A

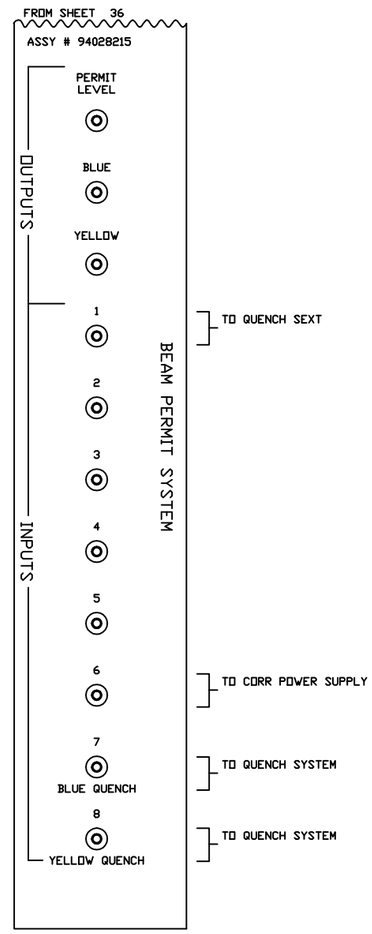

-3	-2	-1	REF DESIGNATOR	ITEM NO.	DESCRIPTION	MAT'L DWG NO./BNL NO.
QTY REQD						

INTERPRET IN GENERAL ACCORDANCE WITH ASME Y14.24M-1989

UNLESS OTHERWISE SPECIFIED DIMENSIONS ARE IN INCHES
DECIMAL TOLERANCES
.X ±.030
.XX ±.015
.XXX ±.005
ANGULAR TOLERANCE ± .5°

NA FINISH

BREAK SHARP EDGES MAX. XX MIN. XX

OUTSTANDING ECN

Q.A. CATEGORY A-3		DATE
DRAWN BY	Ed Koropsak	3/18/98
CHECKED BY		
DESIGN APPROVAL		
ENGINEER APPROVAL	R. MICHNOFF	3/18/98
SUPVR. APPROVAL		

NEXT ASSEMBLY

BROOKHAVEN NATIONAL LABORATORY
UPTON, N.Y. 11973

RHIC CONTROLS WIRING DIAGRAM
ALCOVE 1009B, RACK R09B09
PERMIT SYSTEM INTERFACE PANEL

SIZE D | DRAWING NUMBER 94028698 | REV. A

MATERIAL: ——— SCALE: NA WEIGHT: – SHEET 37

*AUTOCAD

REV.	ZONE	ECN NO.	DATE	BY	CKR	APP.

CONTROLS- 6/18/03 8:16 AM 8698_38.dwg

MADC MUX A/D IO PANEL
BLDG #: 1009B
RACK #: R09B09
PANEL #: MADC A/D IO PANEL B

FR SHEET 17

- J15 — CHAN 31 SPARE

MADC MUX A/D IO PANEL
BLDG #: 1009B
RACK #: R09B09
PANEL #: MADC A/D IO PANEL C

FR SHEET 19

- J9 — CHAN 41 SPARE
- J10 — CHAN 42 SPARE
- J11 — CHAN 43 SPARE

TO SHEET 20

MADC MUX A/D IO PANEL
BLDG #: 1009B
RACK #: R09B09
PANEL #: MADC A/D IO PANEL D

FR SHEET 20

- J6 — CHAN 54 SPARE
- J7 — CHAN 55 SPARE
- J8 — CHAN 56 SPARE
- J9 — CHAN 57 SPARE
- J10 — CHAN 58 SPARE
- J11 — CHAN 59 SPARE
- J12 — CHAN 60 SPARE
- J13 — CHAN 61 SPARE
- J14 — CHAN 62 SPARE

TO SHEET 21

MADC MUX A/D IO PANEL
BLDG #: 1009B
RACK #: R09B10
PANEL #: MADC A/D IO PANEL A

FR SHEET 25

- J15 — CHAN 15 SPARE

MADC MUX A/D IO PANEL
BLDG #: 1009B
RACK #: R09B10
PANEL #: MADC A/D IO PANEL B

FR SHEET 27

- J15 — CHAN 31 SPARE

MADC MUX A/D IO PANEL
BLDG #: 1009B
RACK #: R09B10
PANEL #: MADC A/D IO PANEL C

FR SHEET 29

- J9 — CHAN 41 SPARE
- J10 — CHAN 42 SPARE
- J11 — CHAN 43 SPARE

TO SHEET 30

MADC MUX A/D IO PANEL
BLDG #: 1009B
RACK #: R09B10
PANEL #: MADC A/D IO PANEL D

FR SHEET 30

- J6 — CHAN 54 SPARE
- J7 — CHAN 55 SPARE
- J8 — CHAN 56 SPARE
- J9 — CHAN 57 SPARE
- J10 — CHAN 58 SPARE
- J11 — CHAN 59 SPARE
- J12 — CHAN 60 SPARE
- J13 — CHAN 61 SPARE
- J14 — CHAN 62 SPARE

TO SHEET 11

-3	-2	-1	REF DESIGNATOR	ITEM NO.	DESCRIPTION	MAT'L. DWG NO.,SPEC. NO.
QTY REQD						

INTERPRET IN GENERAL ACCORDANCE WITH ASME Y14.24M-1989

UNLESS OTHERWISE SPECIFIED DIMENSIONS ARE IN INCHES

DECIMAL TOLERANCES
.X ±.030
.XX ±.015
.XXX ±.005
ANGULAR TOLERANCE
± .5°

NA FINISH

BREAK SHARP EDGES
MAX. XX MIN. XX

OUTSTANDING ECN

Q.A. CATEGORY A-3		DATE
DRAWN BY	Ed Koropsak	3/18/98
CHECKED BY		
DESIGN APPROVAL		
ENGINEER APPROVAL	R. MICHNOFF	3/18/98
SUPVR. APPROVAL		
NEXT ASSEMBLY		

BROOKHAVEN NATIONAL LABORATORY
UPTON, N.Y. 11973

RHIC CONTROLS WIRING DIAGRAM
ALCOVE 1009B
SPARE MADC INPUTS

SIZE D — DRAWING NUMBER 94028698 — REV. A

MATERIAL: ——— SCALE: NA WEIGHT: – SHEET 38

*AUTOCAD