RHIC Accelerator Controls Section
Bldg. 1012A Wiring Diagrams
BNL Drawing Number 94028579

Brookhaven National Laboratory, Upton, New York 11973

Created By: Ralph Schoenfeld
Last Updated 11/21/03

Power Distribution
- 🕮 Rack R12A21, Rack R12A20 (Sheet 1)
- 🕮 Rack R12A19, Rack R12A18 (Sheet 2)
- 🕮 Rack R12A17, Rack R12A16, Rack R12A15 (Sheet 3)

SPARES
- 🕮 MADC Channels (Sheet 60)
- 🕮 F/O Channels (Sheet 61)

Serial Links
- 🕮 Event Link (Sheet 4,5)
- 🕮 Real Time Data Link (RTDL) (Sheet 6,7)
- 🕮 Reset Link (Sheet 8)
- 🕮 Beam Sync Yellow Link (Sheet 9)
- 🕮 Beam Sync Blue Link (Sheet 10)

VME Chassis CFE-12A-PS1 modules
- 🕮 Front End Computer, V108 Utility Module (Sheet 11)
- 🕮 V113/V114 MADC System (Sheet 12)
- 🕮 V115 WFG A: bo11-tq4, bo11-tq5 (Sheet 13)
- 🕮 V115 WFG B: bo11-tq6, bi12-tq4 (Sheet 14)
- 🕮 V115 WFG C: bi12-tq5, bi12-tq6 (Sheet 15)
- 🕮 V115 WFG D: b12-q89, bi12-qf9 (Sheet 16)
- 🕮 V115 WFG E: bo11-qf8, b12-dhx (Sheet 17)
- 🕮 V115 WFG F: b12-dh0 (Sheet 18)
- 🕮 V115 WFG G: b12-q6 (Sheet 19)
- 🕮 V120 Permit Module (Sheet 20)
- 🕮 Permit System Interface Panel (Sheet 20)
- 🕮 DX Heater PS MADC Readbacks (Sheet 21)

VME Chassis CFE-12A-PS2 modules
- 🕮 Front End Computer, V108 Utility Module (Sheet 22)
- 🕮 V113/V114 MADC System (Sheet 23)
- 🕮 V115 WFG A: yi11-tq4, yi11-tq5 (Sheet 24)
- 🕮 V115 WFG B: yi11-tq6, yo12-tq4 (Sheet 25)
- 🕮 V115 WFG C: yo12-tq5, yo12-tq6 (Sheet 26)
- 🕮 V115 WFG D: y12-q89, yo12-qf8 (Sheet 27)
- 🕮 V115 WFG E: yi11-qf9, y12-dh0 (Sheet 28)
- 🕮 V102 Delay Module A & Scaler Module - Event Link (Sheet 29)

VME Chassis CFE-12A-PS3 modules
- 🕮 Front End Computer, V108 Utility Module (Sheet 30)
- 🕮 V113/V114 MADC System (Sheet 31)
- 🕮 V115 WFG A: bo11-qd1, bi12-qf1 (Sheet 32)
- 🕮 V115 WFG B: bo11-qf2, bo11-qd3 (Sheet 33)
- 🕮 V115 WFG C: bi12-qd2, bi12-qf3 (Sheet 34)
- 🕮 V115 WFG D: b12-q6, b12-q7 (Sheet 35)
- 🕮 V115 WFG E: yi11-qf1, yo12-qd1 (Sheet 36)
- 🕮 V115 WFG F: yi11-qd2, yi11-qf3 (Sheet 37)
- 🕮 V115 WFG G: yo12-qf2, yo12-qd3 (Sheet 38)
- 🕮 V115 WFG H: y12-q6, y12-q7 (Sheet 39)

VME Chassis CFE-12A-VME modules
- 🕮 Front End Computer, V108 Utility Module (Sheet 40)
- 🕮 VMIC 1160A-201D (Sheet 41)
- 🕮 VMIC 2170A-210D (Sheet 42)
- 🕮 OMS MOTOR CONTROLLER VX2-006 (Sheet 43)
- 🕮 VMIVME 3122-442 (Sheet 44)

VME Chassis CFE-12A-POLAR1 modules
- 🕮 Front End Computer, V108 Utility Module (Sheet 45)
- 🕮 V102 Delay Module (Sheet 46)
- 🕮 V113/V114 MADC System (Sheet 47)
- 🕮 OMS Motor Controller VMEX-2E (Sheet 48)
- 🕮 V124 YELLOW & BLUE Beam Sync Decoder Module (Sheet 49)
- 🕮 OMS Motor Controller VX-2 (Sheet 50)
- 🕮 V124 YELLOW & BLUE Beam Sync Decoder Module (Sheet 51)
- 🕮 SIS3803 Scaler Module (Sheet 52)

VME Chassis CFE-12A-EDS1 modules
- 🕮 Front End Computer, V108 Utility Module (Sheet 53)
- 🕮 V124 YELLOW & BLUE Beam Sync Decoder Module (Sheet 54)
- 🕮 V189 ECL to TTL Module (Sheet 55)
- 🕮 HP E1366A RF MUX Module (Sheet 56)

VME Chassis CFE-12A-EDS2 modules
- 🕮 Front End Computer, V108 Utility Module (Sheet 57)
- 🕮 VMIC 2170A-200D (Sheet 58)
- 🕮 SIS3803 Scaler Module (Sheet 59)

REV.	ZONE	ECN NO.	DATE	BY	CKR	APP.

Schoenfeld, Controls 11/21/2003 8:56 AM 8579_01.dwg

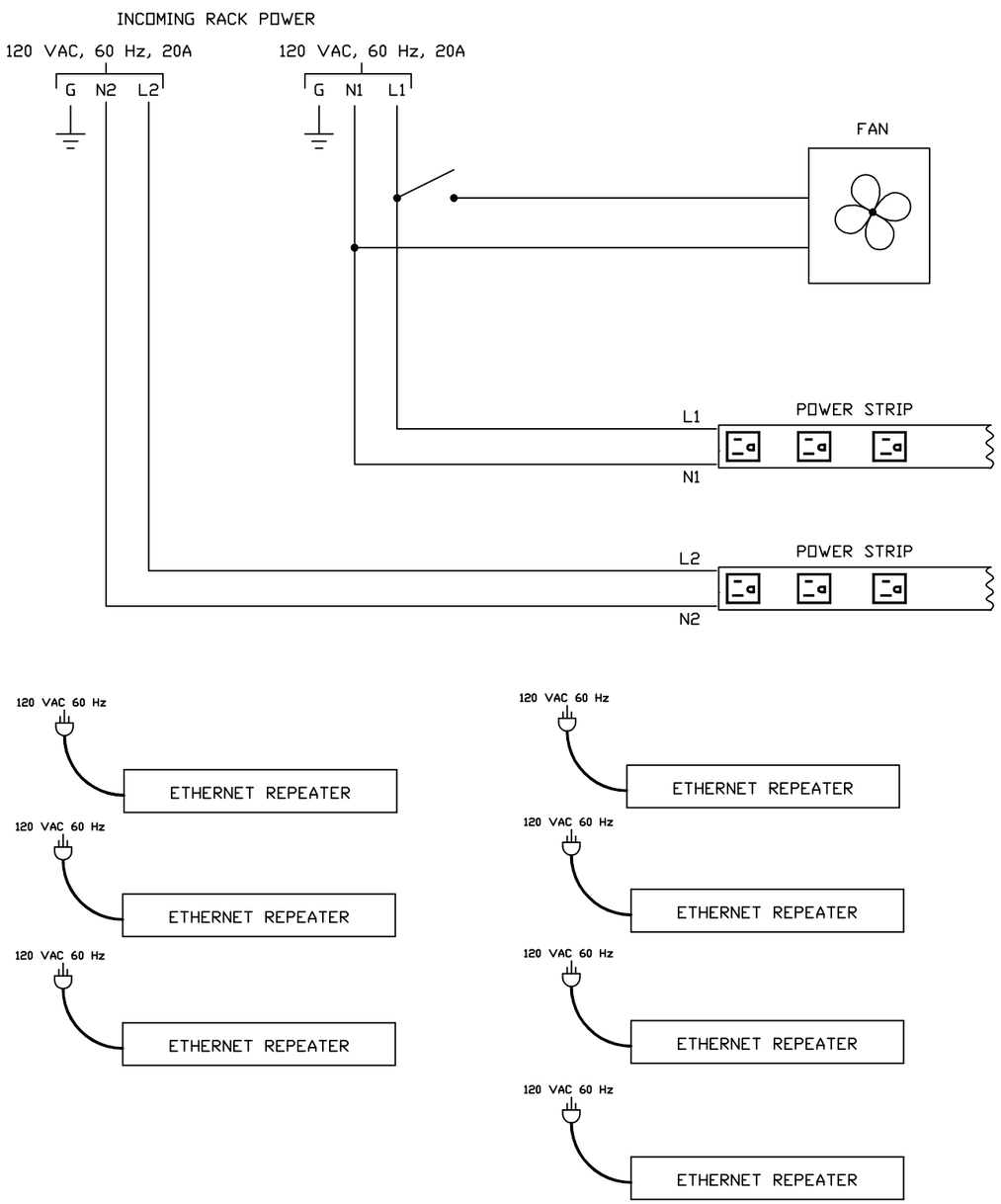

RACK R12A21

NOTE: ALL 120 VAC, 60 Hz POWER CORDS
PLUG INTO POWER STRIP OUTLETS

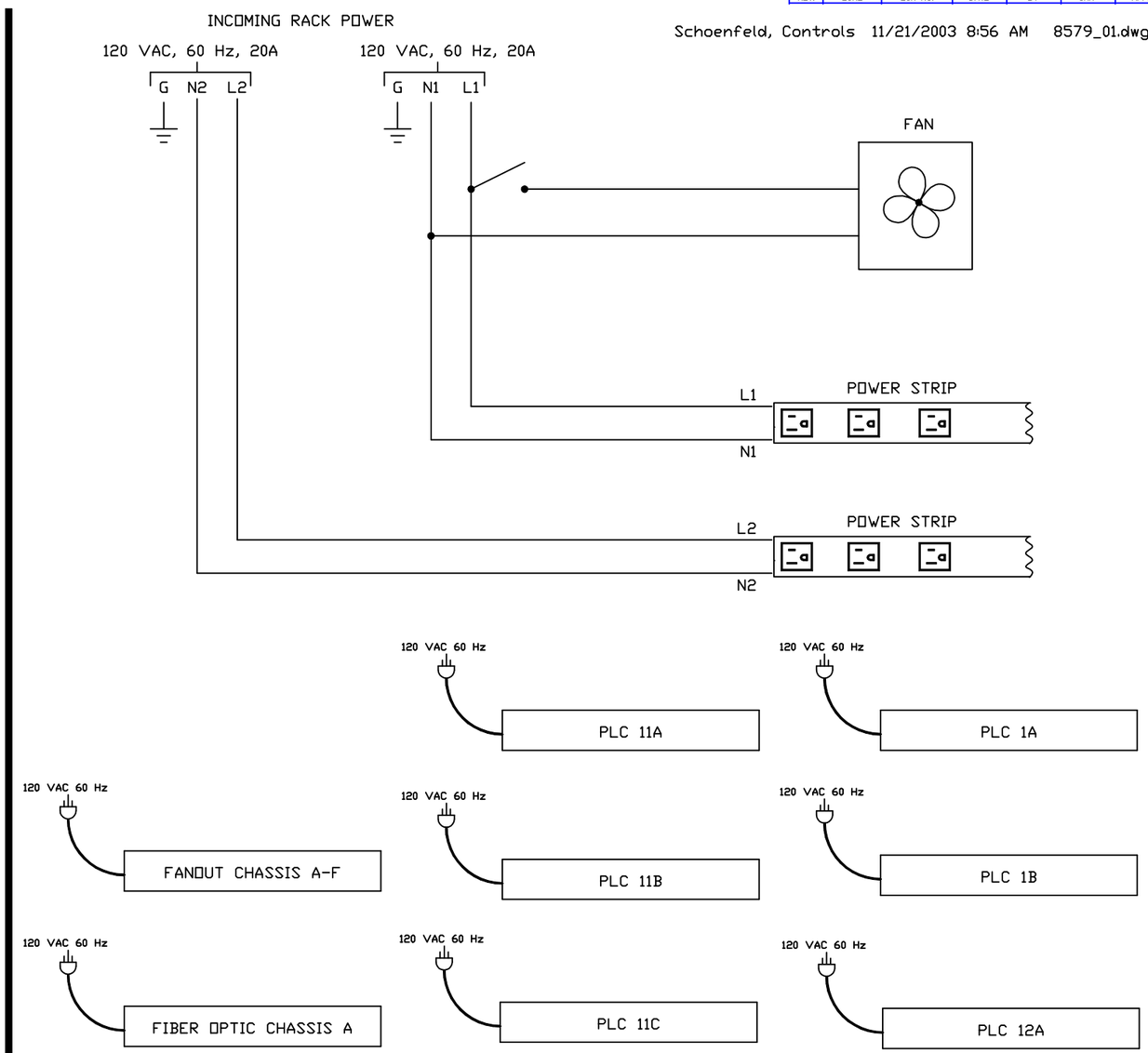

RACK R12A20

NOTE: ALL 120 VAC, 60 Hz POWER CORDS
PLUG INTO POWER STRIP OUTLETS

-3	-2	-1	REF DESIGNATOR	ITEM NO.	DESCRIPTION	MAT'L DWG NO.,BNL NO.
QTY REQD						

INTERPRET IN GENERAL ACCORDANCE WITH ASME Y14.24M-1989
UNLESS OTHERWISE SPECIFIED DIMENSIONS ARE IN INCHES
DECIMAL TOLERANCES .X ±.030 .XX ±.015 .XXX ±.005
ANGULAR TOLERANCE ± .5°
OUTSTANDING ECN
NA FINISH
BREAK SHARP EDGES MAX. XX MIN. XX

Q.A. CATEGORY A-3		DATE	BROOKHAVEN NATIONAL LABORATORY
DRAWN BY	Ed Koropsak	6/23/98	UPTON, N.Y. 11973
CHECKED BY			RHIC CONTROLS WIRING DIAGRAM
DESIGN APPROVAL			SERVICE BLDG. 1212A RACK R12A21, R12A20
ENGINEER APPROVAL	R. MICHNOFF	6/23/98	POWER DISTRIBUTION
SUPVR. APPROVAL			SIZE D — 94028579 — REV. A
NEXT ASSEMBLY			DRAWING NUMBER

MATERIAL: ——— SCALE: NA WEIGHT: – SHEET 1

*AUTOCAD

REV.	ZONE	ECN NO.	DATE	BY	CKR	APP.

Schoenfeld, Controls 11/21/2003 8:55 AM 8579_02.dwg

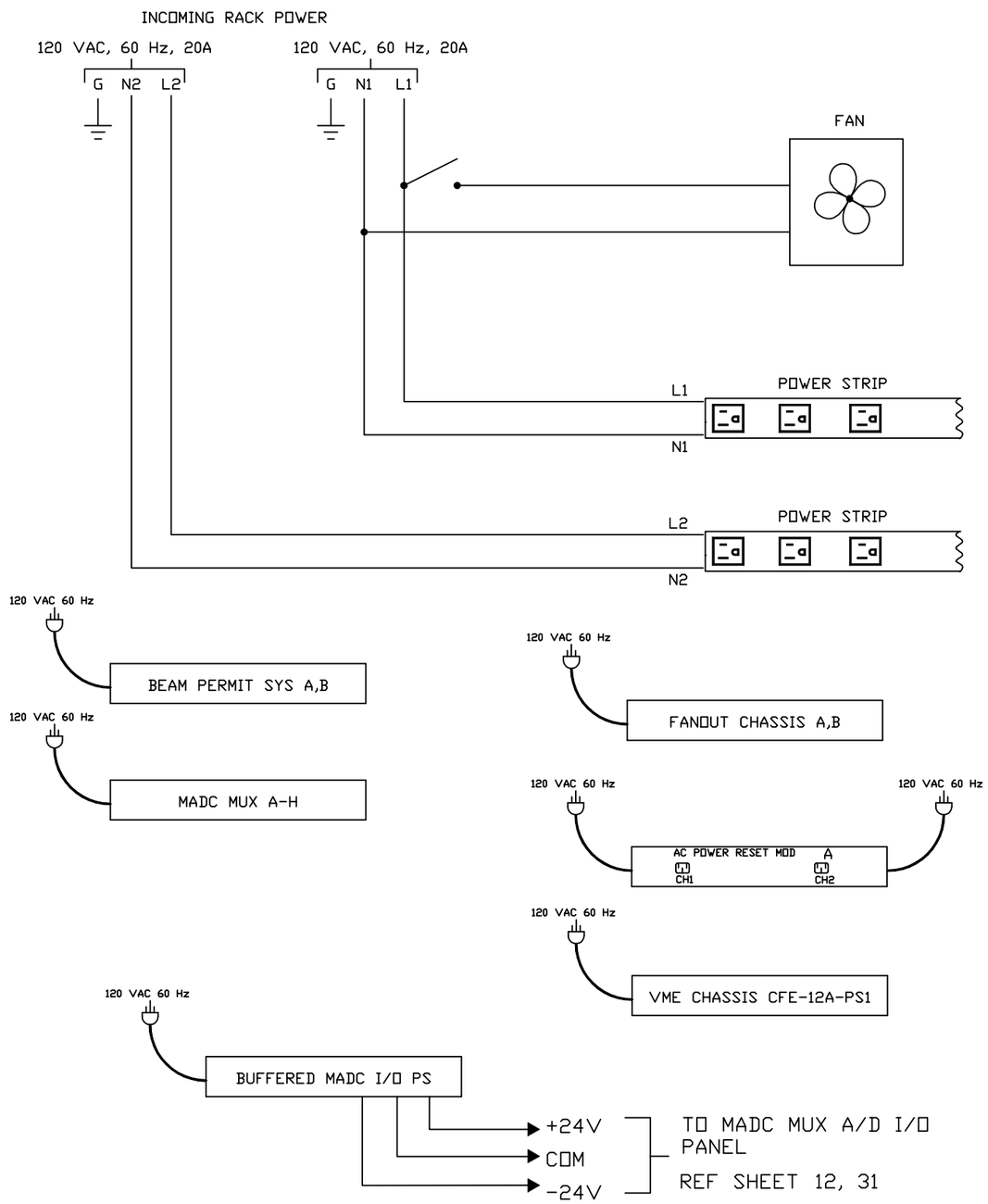

RACK R12A19

NOTE: ALL 120 VAC, 60 Hz POWER CORDS PLUG INTO POWER STRIP OUTLETS

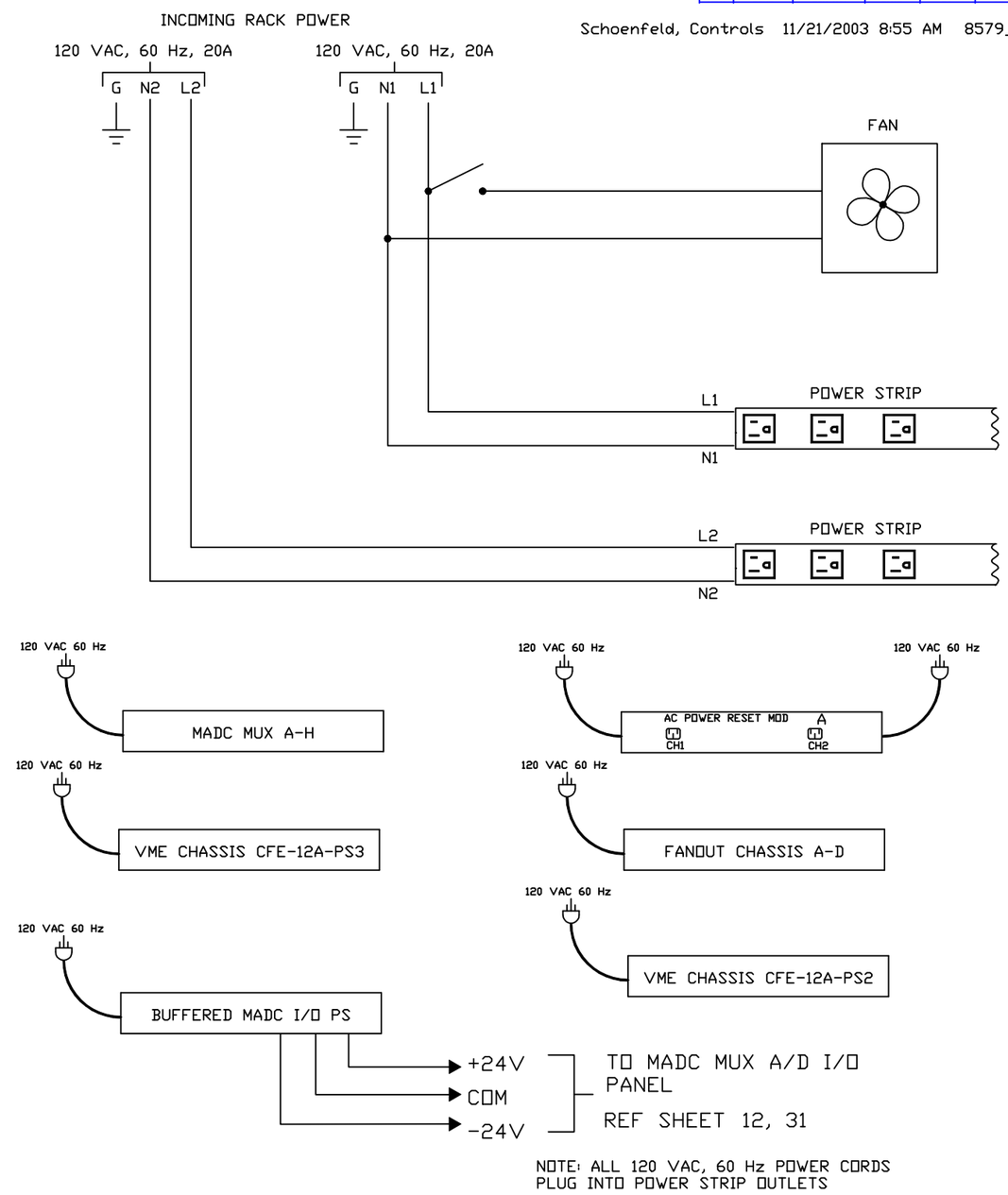

RACK R12A18

NOTE: ALL 120 VAC, 60 Hz POWER CORDS PLUG INTO POWER STRIP OUTLETS

-3	-2	-1	REF DESIGNATOR	ITEM NO.	DESCRIPTION	MAT'L DWG NO./BNL NO.
QTY REQD						

INTERPRET IN GENERAL ACCORDANCE WITH ASME Y14.24M-1989

UNLESS OTHERWISE SPECIFIED DIMENSIONS ARE IN INCHES

DECIMAL TOLERANCES
.X ±.030
.XX ±.015
.XXX ±.005
ANGULAR TOLERANCE ± .5°

OUTSTANDING ECN

NA FINISH

BREAK SHARP EDGES MAX. XX MIN. XX

Q.A. CATEGORY A-3		DATE
DRAWN BY	Ed Koropsak	6/23/98
CHECKED BY		
DESIGN APPROVAL		
ENGINEER APPROVAL	R. MICHNOFF	6/23/98
SUPVR. APPROVAL		

NEXT ASSEMBLY

BROOKHAVEN NATIONAL LABORATORY
UPTON, N.Y. 11973

RHIC CONTROLS WIRING DIAGRAM

SERVICE BLDG. 1012A RACK R12A19, R12A18

POWER DISTRIBUTION

SIZE D — DRAWING NUMBER 94028579 — REV. A

MATERIAL: ——— SCALE: NA WEIGHT: – SHEET 2

*AUTOCAD

REV.	ZONE	ECN NO.	DATE	BY	CKR	APP.

Schoenfeld, Controls 11/21/2003 8:54 AM 8579_03.dwg

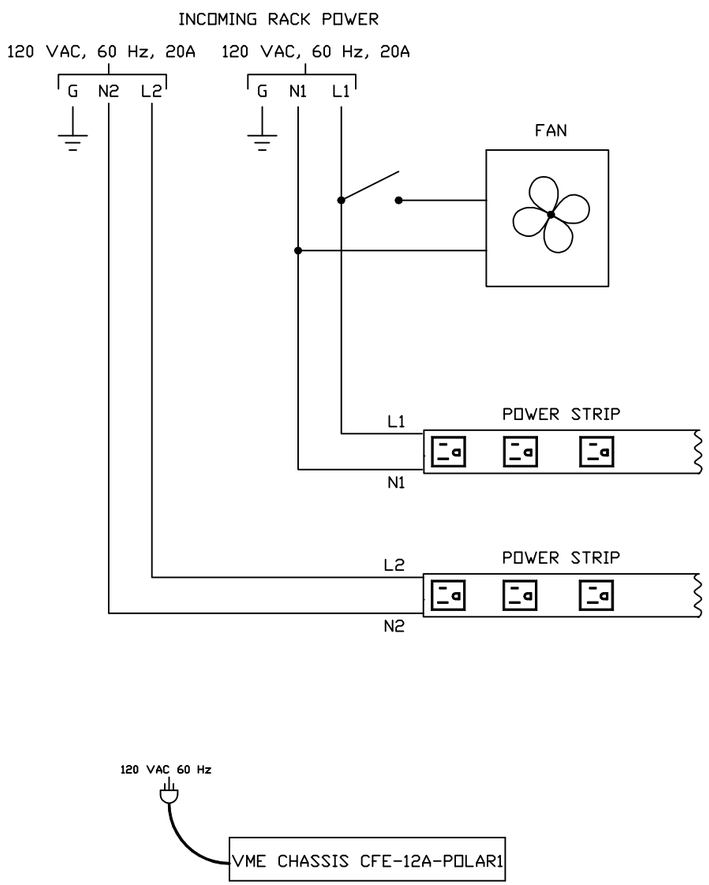

RACK R12A17

NOTE: ALL 120 VAC, 60 Hz POWER CORDS PLUG INTO POWER STRIP OUTLETS

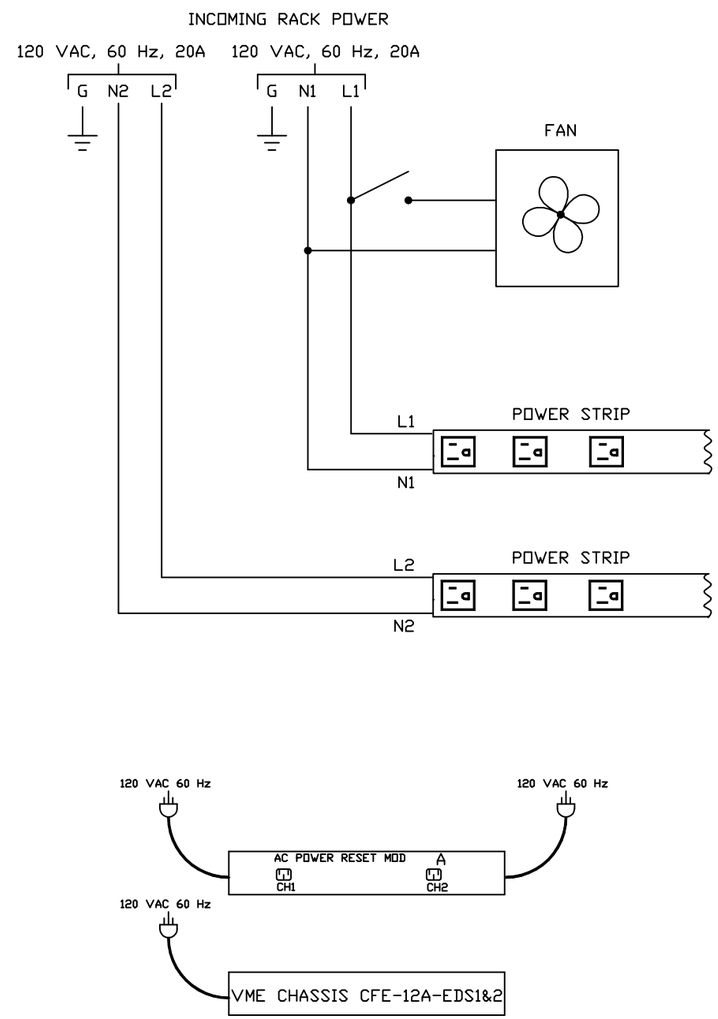

RACK R12A16

NOTE: ALL 120 VAC, 60 Hz POWER CORDS PLUG INTO POWER STRIP OUTLETS

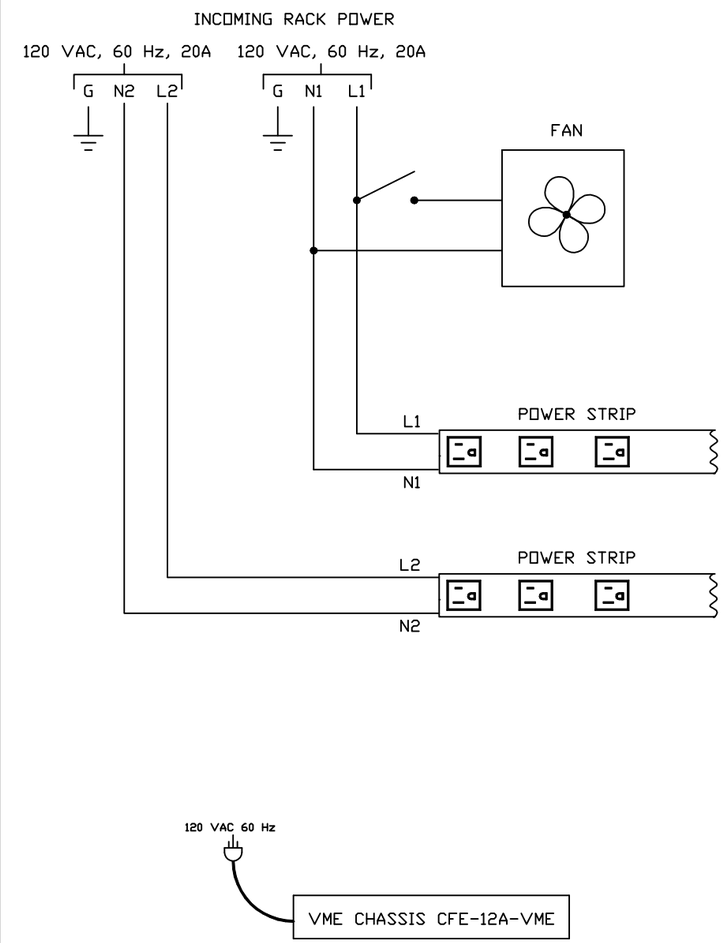

RACK R12A15

NOTE: ALL 120 VAC, 60 Hz POWER CORDS PLUG INTO POWER STRIP OUTLETS

-3	-2	-1	REF DESIGNATOR	ITEM NO.	DESCRIPTION	MAT'L. DWG NO.,BNL NO.
QTY REQD						

INTERPRET IN GENERAL ACCORDANCE WITH ASME Y14.24M-1989

UNLESS OTHERWISE SPECIFIED DIMENSIONS ARE IN INCHES

DECIMAL TOLERANCES
.X ±.030
.XX ±.015
.XXX ±.005
ANGULAR TOLERANCE ± .5°

NA FINISH

BREAK SHARP EDGES MAX. XX MIN. XX

OUTSTANDING ECN

Q.A. CATEGORY A-3		DATE	BROOKHAVEN NATIONAL LABORATORY
DRAWN BY	Ed Koropsak	6/23/98	UPTON, N.Y. 11973
CHECKED BY			RHIC CONTROLS WIRING DIAGRAM
DESIGN APPROVAL			BLDG. 1012A RACK R12A17, R12A16, R12A15
ENGINEER APPROVAL	R. MICHNOFF	6/23/98	POWER DISTRIBUTION
SUPVR. APPROVAL			SIZE D — DRAWING NUMBER 94028579 — REV. A
NEXT ASSEMBLY			MATERIAL: ——— SCALE: NA WEIGHT: – SHEET 3

*AUTOCAD

REV.	ZONE	ECN NO.	DATE	BY	CKR	APP.

Schoenfeld, Controls 11/21/2003 8:53 AM 8579_04.dwg

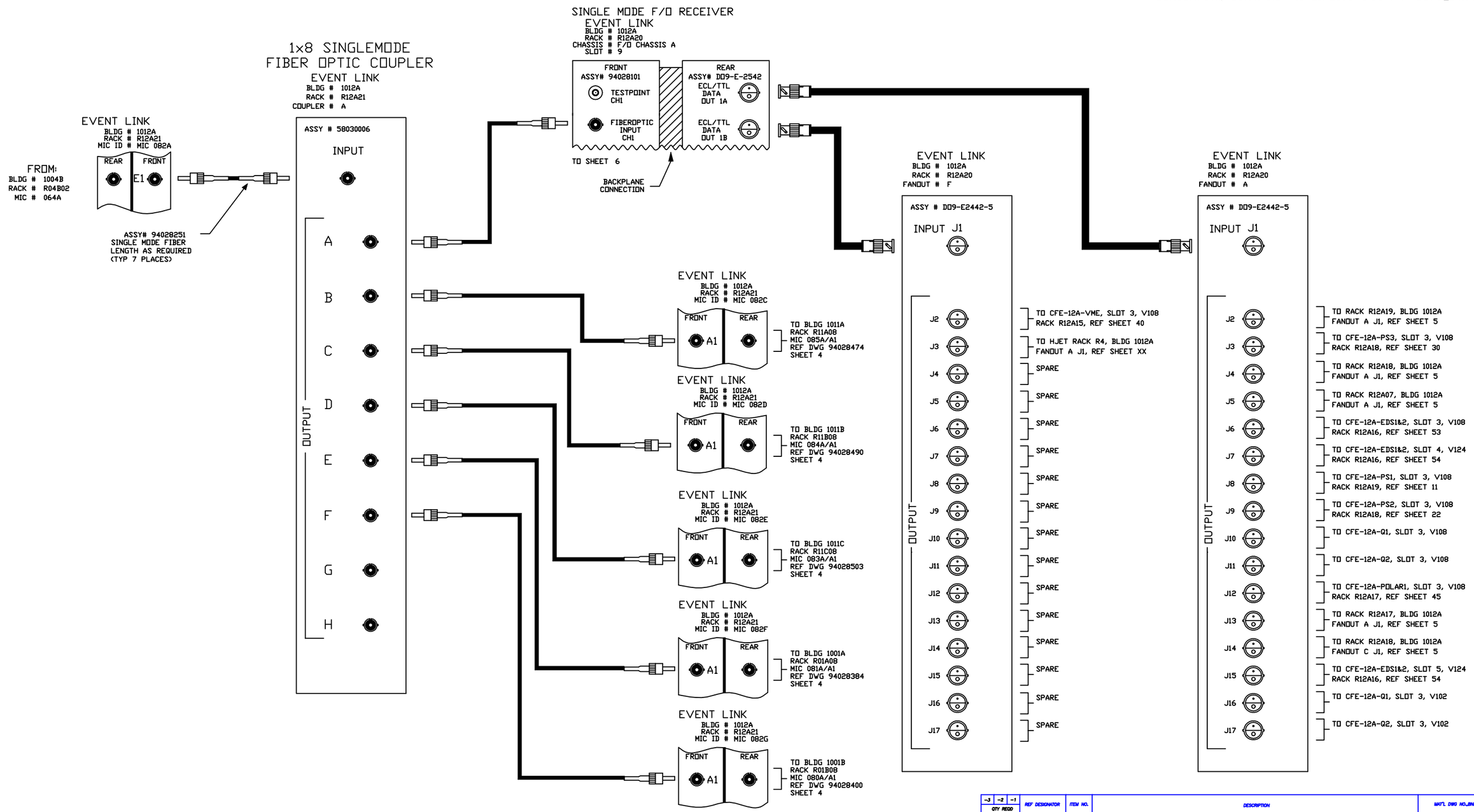

-3	-2	-1	REF DESIGNATOR	ITEM NO.	DESCRIPTION	MAT'L DWG NO.,BNL NO.
QTY REQD						

INTERPRET IN GENERAL ACCORDANCE WITH ASME Y14.24M-1989

UNLESS OTHERWISE SPECIFIED DIMENSIONS ARE IN INCHES

DECIMAL TOLERANCES
.X ±.030
.XX ±.015
.XXX ±.005
ANGULAR TOLERANCE ± .5°

OUTSTANDING ECN: NA

FINISH: √

BREAK SHARP EDGES MAX. XX MIN. XX

Q.A. CATEGORY A-3		DATE
DRAWN BY	Ed Koropsak	6/23/98
CHECKED BY		
DESIGN APPROVAL		
ENGINEER APPROVAL	R. MICHNOFF	6/23/98
SUPVR. APPROVAL		

NEXT ASSEMBLY

BROOKHAVEN NATIONAL LABORATORY
UPTON, N.Y. 11973

RHIC CONTROLS WIRING DIAGRAM
SERVICE BLDG 1012A
EVENT LINK

SIZE: D
DRAWING NUMBER: 94028579
REV.: A
MATERIAL: ——— SCALE: NA WEIGHT: – SHEET 4

1 *AUTOCAD

REV.	ZONE	ECN NO.	DATE	BY	CKR	APP.

Schoenfeld, Controls 11/21/2003 8:50 AM 8579_05.dwg

EVENT LINK

BLDG # 1012A
RACK # R12A19
FANOUT # A

FROM SHEET 4
ASSY # DD9-E2442-5

OUTPUT

J2	TO CFE-12A-PS1, SLOT 21, V120 RACK 12A19, REF SHEET 19
J3	TO CFE-12A-PS1, SLOT 4, V113 RACK 12A19, REF SHEET 12
J4	SPARE
J5	TO CFE-12A-PS1, SLOT 20, V120 RACK 12A19, REF SHEET 19
J6	SPARE
J7	SPARE
J8	SPARE
J9	SPARE
J10	TO CFE-12A-PS1, SLOT 13, T215 RACK 12A19, REF SHEET 18
J11	TO CFE-12A-PS1, SLOT 12, T215 RACK 12A19, REF SHEET 17
J12	TO CFE-12A-PS1, SLOT 11, T215 RACK 12A19, REF SHEET 16
J13	TO CFE-12A-PS1, SLOT 10, T215 RACK 12A19, REF SHEET 15
J14	TO CFE-12A-PS1, SLOT 9, T115 RACK 12A19, REF SHEET 14
J15	TO CFE-12A-PS1, SLOT 8, T215 RACK 12A19, REF SHEET 13
J16	SPARE
J17	SPARE

EVENT LINK

BLDG # 1012A
RACK # R12A18
FANOUT # A

FROM SHEET 4
ASSY # DD9-E2442-5

OUTPUT

J2	TO CFE-12A-PS2, SLOT 20, V102 RACK 12A18, REF SHEET 29
J3	TO CFE-12A-PS2, SLOT 4, V113 RACK 12A18, REF SHEET 23
J4	SPARE
J5	SPARE
J6	SPARE
J7	SPARE
J8	SPARE
J9	SPARE
J10	SPARE
J11	TO CFE-12A-PS2, SLOT 12, T215 RACK 12A18, REF SHEET 28
J12	TO CFE-12A-PS2, SLOT 11, T215 RACK 12A18, REF SHEET 27
J13	TO CFE-12A-PS2, SLOT 10, T215 RACK 12A18, REF SHEET 26
J14	TO CFE-12A-PS2, SLOT 9, T215 RACK 12A18, REF SHEET 25
J15	TO CFE-12A-PS2, SLOT 8, T215 RACK 12A18, REF SHEET 24
J16	SPARE
J17	SPARE

EVENT LINK

BLDG # 1012A
RACK # R12A18
FANOUT # C

FROM SHEET 4
ASSY # DD9-E2442-5

OUTPUT

J2	TO CFE-12A-PS3, SLOT 13, V113 RACK 12A18, REF SHEET 31
J3	SPARE
J4	SPARE
J5	TO CFE-12A-PS3, SLOT 18, T215 RACK 12A18, REF SHEET 39
J6	TO CFE-12A-PS3, SLOT 17, T215 RACK 12A18, REF SHEET 38
J7	TO CFE-12A-PS3, SLOT 16, T215 RACK 12A18, REF SHEET 37
J8	TO CFE-12A-PS3, SLOT 15, T215 RACK 12A18, REF SHEET 36
J9	SPARE
J10	SPARE
J11	SPARE
J12	SPARE
J13	TO CFE-12A-PS3, SLOT 9, T215 RACK 12A18, REF SHEET 35
J14	TO CFE-12A-PS3, SLOT 8, T215 RACK 12A18, REF SHEET 34
J15	TO CFE-12A-PS3, SLOT 7, T215 RACK 12A18, REF SHEET 33
J16	TO CFE-12A-PS3, SLOT 6, T215 RACK 12A18, REF SHEET 32
J17	TO CFE-12A-PS3, SLOT 4, V113 RACK 12A18, REF SHEET 31

EVENT LINK

BLDG # 1012A
RACK # R12A17
FANOUT # A

FROM SHEET 4
ASSY # DD9-E2442-5

OUTPUT

J2	TO CFE-12A-POLAR1, SLOT 12, V124 RACK 12A17, REF SHEET 49
J3	TO CFE-12A-POLAR1, SLOT 13, V124 RACK 12A17, REF SHEET 49
J4	TO CFE-12A-POLAR1, SLOT 19, V124 RACK 12A17, REF SHEET 51
J5	TO CFE-12A-POLAR1, SLOT 20, V124 RACK 12A17, REF SHEET 51
J6	SPARE
J7	SPARE
J8	SPARE
J9	SPARE
J10	SPARE
J11	SPARE
J12	SPARE
J13	SPARE
J14	SPARE
J15	SPARE
J16	TO CFE-12A-POLAR1, SLOT 6, V113 RACK 12A17, REF SHEET 47
J17	TO CFE-12A-POLAR1, SLOT 4, V102 RACK 12A17, REF SHEET 46

EVENT LINK

BLDG # 1012A
RACK # R12A07
FANOUT # A

FROM SHEET 4
ASSY # DD9-E2442-5

OUTPUT

J2	To CFE-12A-BLM1, SLOT 3, V108
J3	To CFE-12A-BLM1, SLOT 6, V113
J4	To CFE-12A-BLM1, SLOT 13, V118
J5	To CFE-12A-BLM2, SLOT 3, V108
J6	To CFE-12A-BLM2, SLOT 6, V113
J7	To CFE-12A-BLM2, SLOT 13, V118
J8	To CFE-12A-BPM1, SLOT 3, V108
J9	SPARE
J10	SPARE
J11	SPARE
J12	SPARE
J13	SPARE
J14	SPARE
J15	SPARE
J16	SPARE
J17	SPARE

-3	-2	-1	REF DESIGNATOR	ITEM NO.	DESCRIPTION	MAT'L. DWG NO.,BNL NO.
QTY REQD						

INTERPRET IN GENERAL ACCORDANCE WITH ASME Y14.24M-1989

UNLESS OTHERWISE SPECIFIED DIMENSIONS ARE IN INCHES

DECIMAL TOLERANCES
.X ±.030
.XX ±.015
.XXX ±.005
ANGULAR TOLERANCE ± .5°

OUTSTANDING ECN

NA FINISH

BREAK SHARP EDGES MAX. XX MIN. XX

Q.A. CATEGORY	A-3	DATE	
DRAWN BY	Ed Koropsak	6/23/98	
CHECKED BY			
DESIGN APPROVAL			
ENGINEER APPROVAL	R. MICHNOFF	6/23/98	
SUPVR. APPROVAL			

NEXT ASSEMBLY

BROOKHAVEN NATIONAL LABORATORY
UPTON, N.Y. 11973

RHIC CONTROLS WIRING DIAGRAM
SERVICE BLDG 1012A
EVENT LINK

SIZE D
94028579
DRAWING NUMBER
REV. A

MATERIAL: ——— SCALE: NA WEIGHT: – SHEET 5

*AUTOCAD

REV.	ZONE	ECN NO.	DATE	BY	CKR	APP.

Schoenfeld, Controls 11/21/2003 8:47 AM 8579_06.dwg

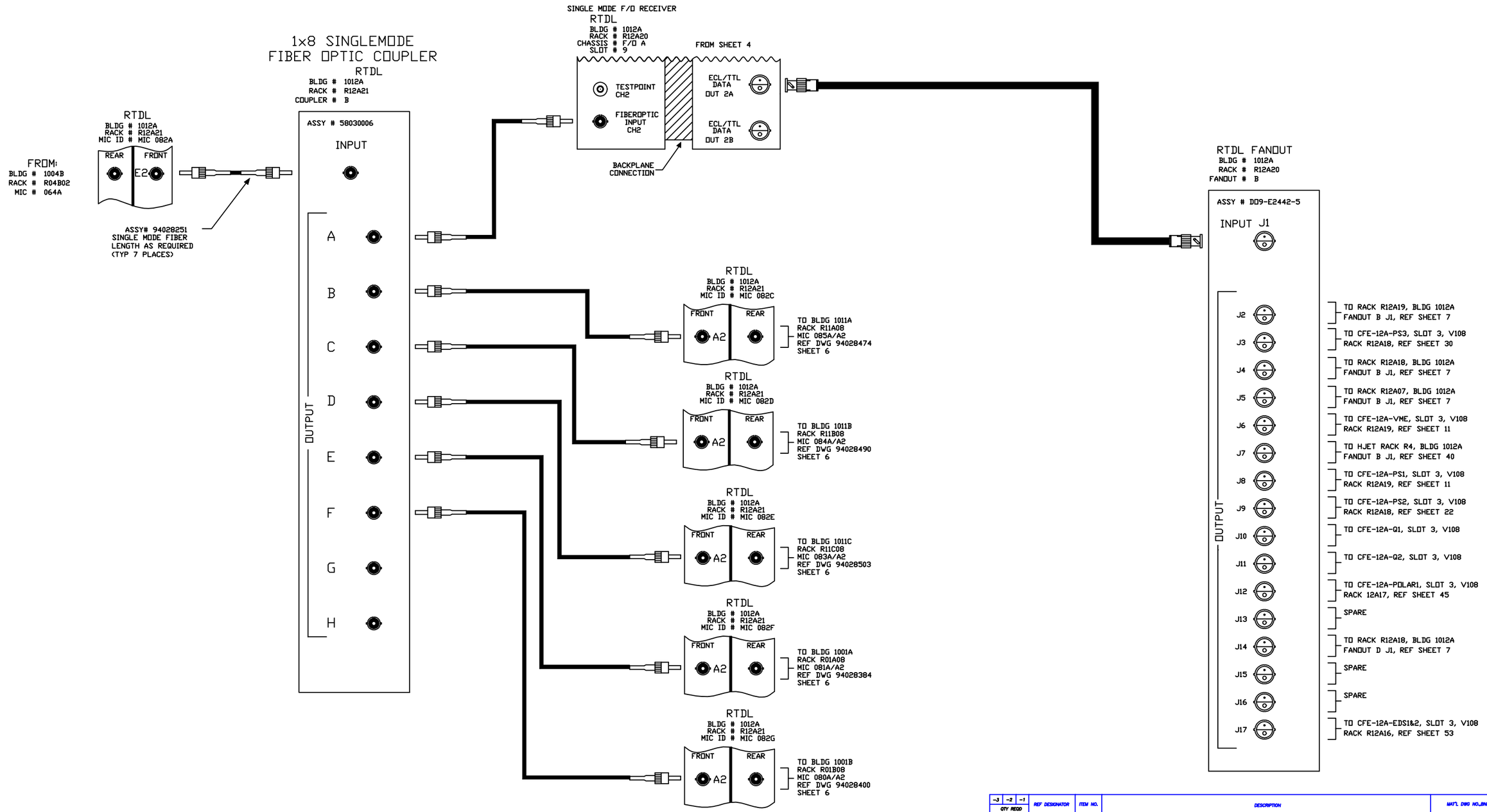

-3	-2	-1	REF DESIGNATOR	ITEM NO.	DESCRIPTION	MAT'L DWG NO.,BNL NO.
	QTY REQD					

INTERPRET IN GENERAL ACCORDANCE WITH ASME Y14.24M-1989

UNLESS OTHERWISE SPECIFIED DIMENSIONS ARE IN INCHES

DECIMAL TOLERANCES
.X ±.030
.XX ±.015
.XXX ±.005
ANGULAR TOLERANCE
± .5°

NA FINISH

BREAK SHARP EDGES
MAX. XX MIN. XX

OUTSTANDING ECN

Q.A. CATEGORY A-3		DATE
DRAWN BY	Ed Koropsak	6/23/98
CHECKED BY		
DESIGN APPROVAL		
ENGINEER APPROVAL	R. MICHNOFF	6/23/98
SUPVR. APPROVAL		
NEXT ASSEMBLY		

BROOKHAVEN NATIONAL LABORATORY
UPTON, N.Y. 11973

RHIC CONTROLS WIRING DIAGRAM
SERVICE BLDG 1012A
RTDL LINK

SIZE D | DRAWING NUMBER 94028579 | REV. A

MATERIAL: ——— SCALE: NA WEIGHT: – SHEET 6

*AUTOCAD

REV.	ZONE	ECN NO.	DATE	BY	CKR	APP.

Schoenfeld, Controls 11/21/2003 8:43 AM 8579_07.dwg

RTDL FANOUT
BLDG # 1012A
RACK # R12A19
FANOUT # B

FROM SHEET 6
ASSY # DD9-E2442-5

OUTPUT	
J2	SPARE
J3	SPARE
J4	SPARE
J5	SPARE
J6	SPARE
J7	SPARE
J8	SPARE
J9	SPARE
J10	TO CFE-12A-PS1, SLOT 13, T215 RACK R12A19, REF SHEET 18
J11	TO CFE-12A-PS1, SLOT 12, T215 RACK R12A19, REF SHEET 17
J12	TO CFE-12A-PS1, SLOT 11, T215 RACK R12A19, REF SHEET 16
J13	TO CFE-12A-PS1, SLOT 10, T215 RACK R12A19, REF SHEET 15
J14	TO CFE-12A-PS1, SLOT 9, T115 RACK R12A19, REF SHEET 14
J15	TO CFE-12A-PS1, SLOT 8, T215 RACK R12A19, REF SHEET 13
J16	SPARE
J17	SPARE

RTDL FANOUT
BLDG # 1012A
RACK # R12A18
FANOUT # B

FROM SHEET 6
ASSY # DD9-E2442-5

OUTPUT	
J2	TO CFE-12A-PS2, SLOT 20, V102 RACK R12A18, REF SHEET 29
J3	TO CFE-12A-PS2, SLOT 4, V113 RACK R12A18, REF SHEET 23
J4	SPARE
J5	SPARE
J6	SPARE
J7	SPARE
J8	SPARE
J9	SPARE
J10	SPARE
J11	TO CFE-12A-PS2, SLOT 12, T215 RACK R12A18, REF SHEET 28
J12	TO CFE-12A-PS2, SLOT 11, T215 RACK R12A18, REF SHEET 27
J13	TO CFE-12A-PS2, SLOT 10, T215 RACK R12A18, REF SHEET 26
J14	TO CFE-12A-PS2, SLOT 9, T215 RACK R12A18, REF SHEET 25
J15	TO CFE-12A-PS2, SLOT 8, T215 RACK R12A18, REF SHEET 24
J16	SPARE
J17	SPARE

RTDL FANOUT
BLDG # 1012A
RACK # R12A18
FANOUT # D

FROM SHEET 6
ASSY # DD9-E2442-5

OUTPUT	
J2	SPARE
J3	SPARE
J4	SPARE
J5	TO CFE-12A-PS3, SLOT 18, T215 RACK R12A18, REF SHEET 39
J6	TO CFE-12A-PS3, SLOT 17, T215 RACK R12A18, REF SHEET 38
J7	TO CFE-12A-PS3, SLOT 16, T215 RACK R12A18, REF SHEET 37
J8	TO CFE-12A-PS3, SLOT 15, T215 RACK R12A18, REF SHEET 36
J9	SPARE
J10	SPARE
J11	SPARE
J12	SPARE
J13	TO CFE-12A-PS3, SLOT 9, T215 RACK R12A18, REF SHEET 35
J14	TO CFE-12A-PS3, SLOT 8, T215 RACK R12A18, REF SHEET 34
J15	TO CFE-12A-PS3, SLOT 7, T215 RACK R12A18, REF SHEET 33
J16	TO CFE-12A-PS3, SLOT 6, T215 RACK R12A18, REF SHEET 32
J17	SPARE

RTDL FANOUT
BLDG # 1012A
RACK # R12A07
FANOUT # B

FROM SHEET 6
ASSY # DD9-E2442-5

OUTPUT	
J2	TO CFE-12A-BLM1, SLOT 3, V108
J3	TO CFE-12A-BLM2, SLOT 3, V108
J4	TO CFE-12A-BPM1, SLOT 3, V108
J5	SPARE
J6	SPARE
J7	SPARE
J8	SPARE
J9	SPARE
J10	SPARE
J11	SPARE
J12	SPARE
J13	SPARE
J14	SPARE
J15	SPARE
J16	SPARE
J17	SPARE

-3	-2	-1	REF DESIGNATOR	ITEM NO.	DESCRIPTION	MAT'L. DWG NO.,BNL NO.
QTY REQD						

INTERPRET IN GENERAL ACCORDANCE WITH ASME Y14.24M-1989
UNLESS OTHERWISE SPECIFIED DIMENSIONS ARE IN INCHES
DECIMAL TOLERANCES .X ±.030 .XX ±.015 .XXX ±.005
ANGULAR TOLERANCE ± .5°
OUTSTANDING ECN
NA FINISH
BREAK SHARP EDGES MAX. XX MIN. XX

Q.A. CATEGORY A-3	DATE	
DRAWN BY Ed Koropsak	6/26/98	
CHECKED BY		
DESIGN APPROVAL		
ENGINEER APPROVAL R. MICHNOFF	6/26/98	
SUPVR. APPROVAL		
NEXT ASSEMBLY		

BROOKHAVEN NATIONAL LABORATORY
UPTON, N.Y. 11973
RHIC CONTROLS WIRING DIAGRAM
SERVICE BLDG 1012A
REAL TIME DATA LINK

SIZE D | DRAWING NUMBER 94028579 | REV. A
MATERIAL: ——— | SCALE: NA | WEIGHT: – | SHEET 7

*AUTOCAD

Schoenfeld, Controls 11/21/2003 8:41 AM 8579_08.dwg

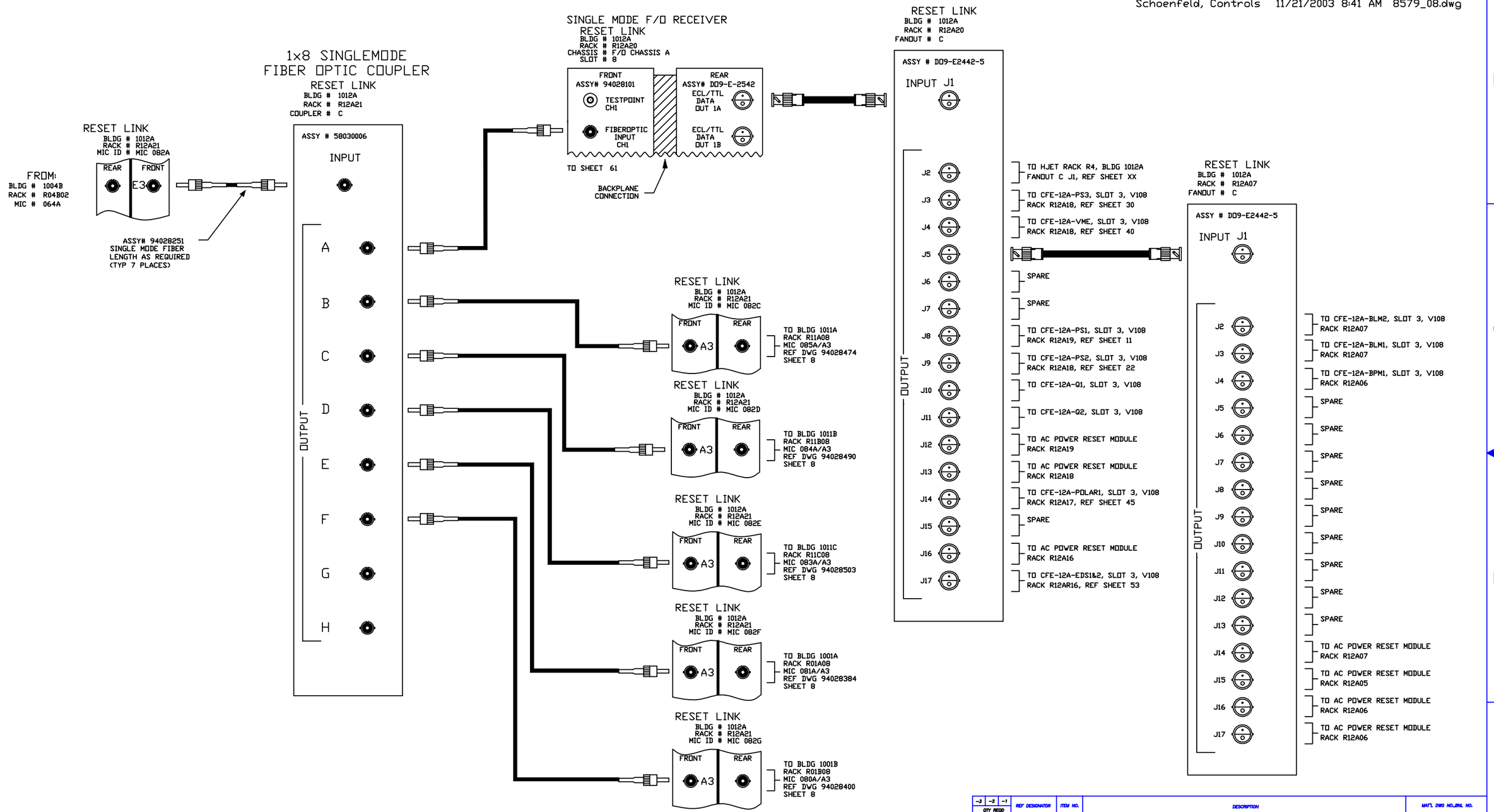

REV.	ZONE	ECN NO.	DATE	BY	CKR	APP.

-3	-2	-1	REF DESIGNATOR	ITEM NO.	DESCRIPTION	MAT'L. DWG NO.,BRL NO.
QTY REQD						

INTERPRET IN GENERAL ACCORDANCE WITH ASME Y14.24M-1989

UNLESS OTHERWISE SPECIFIED DIMENSIONS ARE IN INCHES

DECIMAL TOLERANCES
.X ±.030
.XX ±.015
.XXX ±.005
ANGULAR TOLERANCE
± .5°

OUTSTANDING ECN: NA

FINISH: BREAK SHARP EDGES

MAX. XX MIN. XX

Q.A. CATEGORY A-3		DATE
DRAWN BY	Ed Koropsak	6/23/98
CHECKED BY		
DESIGN APPROVAL		
ENGINEER APPROVAL	R. MICHNOFF	6/23/98
SUPVR. APPROVAL		

NEXT ASSEMBLY

BROOKHAVEN NATIONAL LABORATORY
UPTON, N.Y. 11973

RHIC CONTROLS WIRING DIAGRAM
SERVICE BLDG 1012A
RESET LINK

SIZE: D
DRAWING NUMBER: 94028579
REV.: A

MATERIAL: ——— SCALE: NA WEIGHT: – SHEET 8

*AUTOCAD

Schoenfeld, Controls 11/10/2003 11:33 AM 8579_09.dwg

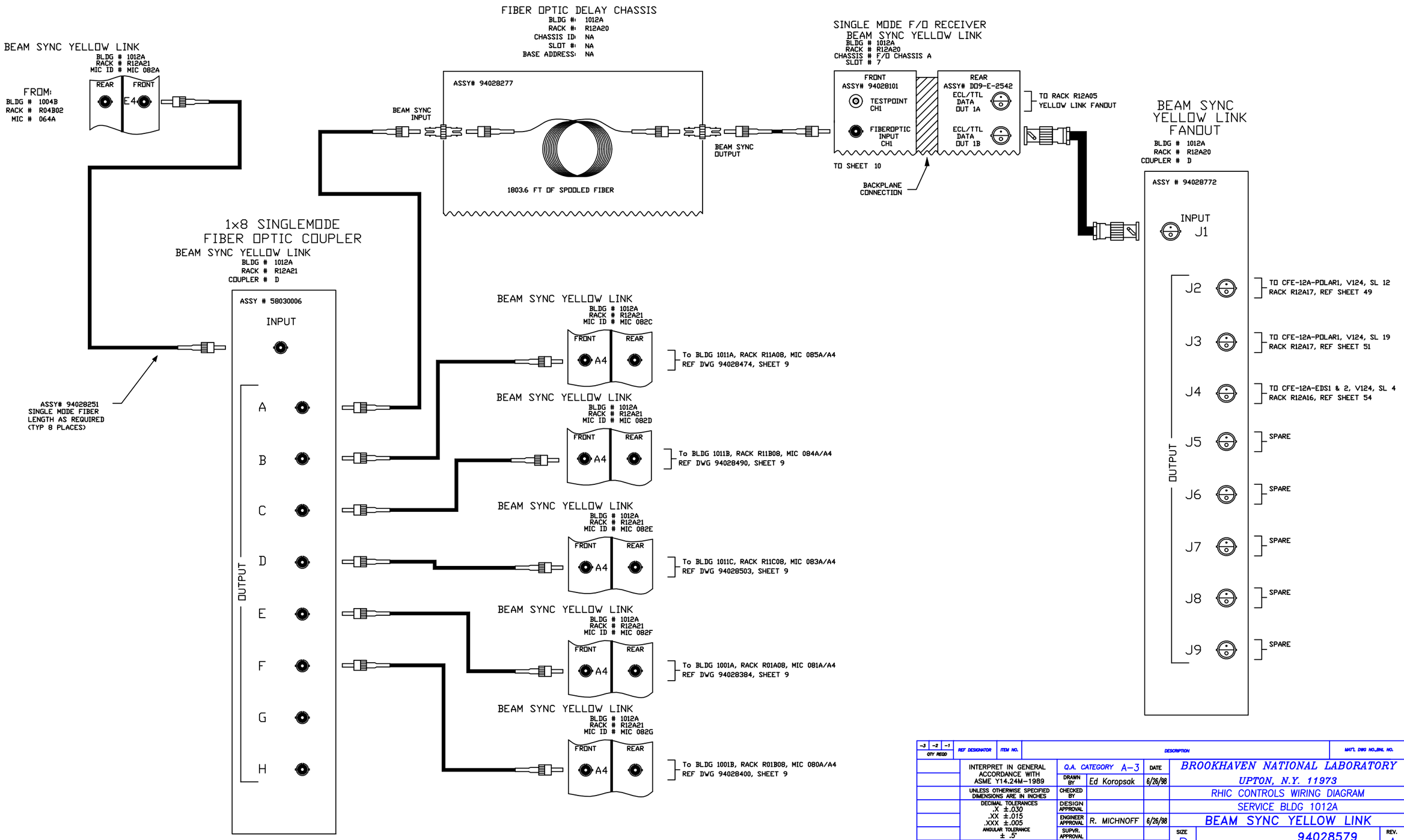

REV.	ZONE	ECN NO.	DATE	BY	CKR	APP.

-3	-2	-1	REF DESIGNATOR	ITEM NO.	DESCRIPTION	MAT'L DWG NO./BNL NO.
QTY REQD						

INTERPRET IN GENERAL ACCORDANCE WITH ASME Y14.24M-1989

UNLESS OTHERWISE SPECIFIED DIMENSIONS ARE IN INCHES

DECIMAL TOLERANCES
.X ±.030
.XX ±.015
.XXX ±.005
ANGULAR TOLERANCE
± .5°

FINISH: NA

BREAK SHARP EDGES
MAX. XX MIN. XX

OUTSTANDING ECN

Q.A. CATEGORY A-3	DATE	
DRAWN BY	Ed Koropsak	6/26/98
CHECKED BY		
DESIGN APPROVAL		
ENGINEER APPROVAL	R. MICHNOFF	6/26/98
SUPVR. APPROVAL		

NEXT ASSEMBLY

BROOKHAVEN NATIONAL LABORATORY
UPTON, N.Y. 11973

RHIC CONTROLS WIRING DIAGRAM
SERVICE BLDG 1012A
BEAM SYNC YELLOW LINK

SIZE D | DRAWING NUMBER 94028579 | REV. A

MATERIAL: ——— | SCALE: NA | WEIGHT: – | SHEET 9

*AUTOCAD

Schoenfeld, Controls 11/21/2003 8:37 AM 8579_10.dwg

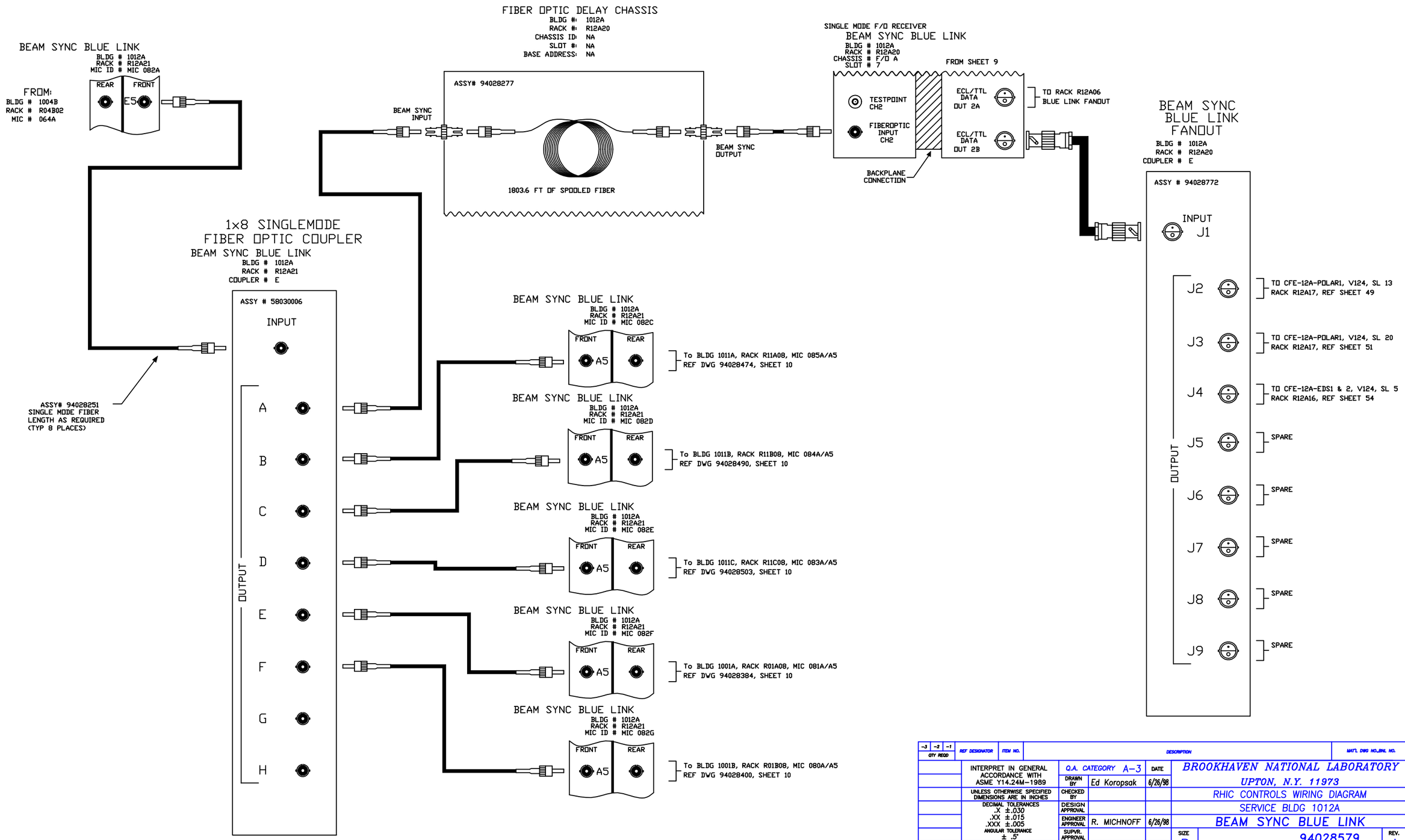

-3	-2	-1	REF DESIGNATOR	ITEM NO.	DESCRIPTION	MAT'L DWG NO./BNL NO.
QTY REQD						

INTERPRET IN GENERAL ACCORDANCE WITH ASME Y14.24M-1989	Q.A. CATEGORY A-3	DATE	BROOKHAVEN NATIONAL LABORATORY UPTON, N.Y. 11973
	DRAWN BY Ed Koropsak	6/26/98	
UNLESS OTHERWISE SPECIFIED DIMENSIONS ARE IN INCHES	CHECKED BY		RHIC CONTROLS WIRING DIAGRAM
DECIMAL TOLERANCES .X ±.030 .XX ±.015 .XXX ±.005 ANGULAR TOLERANCE ± .5°	DESIGN APPROVAL		SERVICE BLDG 1012A
	ENGINEER APPROVAL R. MICHNOFF	6/26/98	BEAM SYNC BLUE LINK
	SUPVR. APPROVAL		SIZE D — 94028579 — REV. A
NA FINISH	BREAK SHARP EDGES MAX. XX MIN. XX	NEXT ASSEMBLY	DRAWING NUMBER
OUTSTANDING ECN			MATERIAL: ——— SCALE: NA WEIGHT: – SHEET 10

*AUTOCAD

REV.	ZONE	ECN NO.	DATE	BY	CKR	APP.

Schoenfeld, Controls 11/21/2003 8:35 AM 8579_11.dwg

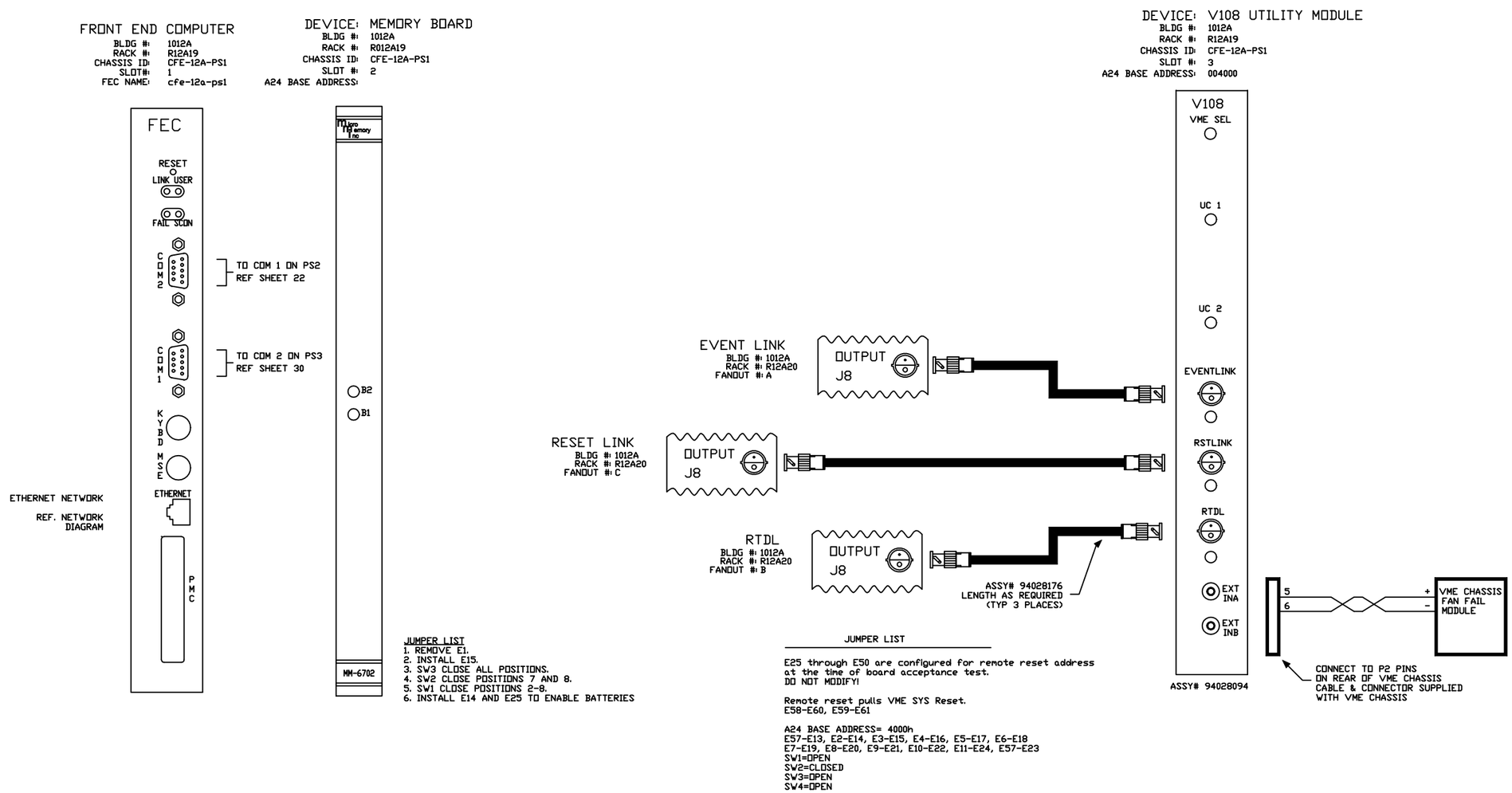

-3	-2	-1	REF DESIGNATOR	ITEM NO.	DESCRIPTION	MAT'L. DWG NO./BNL NO.
QTY REQD						

INTERPRET IN GENERAL ACCORDANCE WITH ASME Y14.24M-1989

UNLESS OTHERWISE SPECIFIED DIMENSIONS ARE IN INCHES

DECIMAL TOLERANCES
.X ±.030
.XX ±.015
.XXX ±.005
ANGULAR TOLERANCE ± .5°

NA FINISH

BREAK SHARP EDGES
MAX. XX MIN. XX

OUTSTANDING ECN

Q.A. CATEGORY A-3		DATE
DRAWN BY	Ed Koropsak	6/26/98
CHECKED BY		
DESIGN APPROVAL		
ENGINEER APPROVAL	R. MICHNOFF	6/26/98
SUPVR. APPROVAL		

NEXT ASSEMBLY

BROOKHAVEN NATIONAL LABORATORY
UPTON, N.Y. 11973

RHIC CONTROLS WIRING DIAGRAM
1012A, VME CHASSIS CFE-12A-PS1
FT END COMP/V108 UTIL MODULE

SIZE D | DRAWING NUMBER 94028579 | REV. A

MATERIAL: ——— SCALE: NA WEIGHT: – SHEET 11

*AUTOCAD

REV.	ZONE	ECN NO.	DATE	BY	CKR	APP.

Schoenfeld, Controls 11/21/2003 8:29 AM 8579_12.dwg

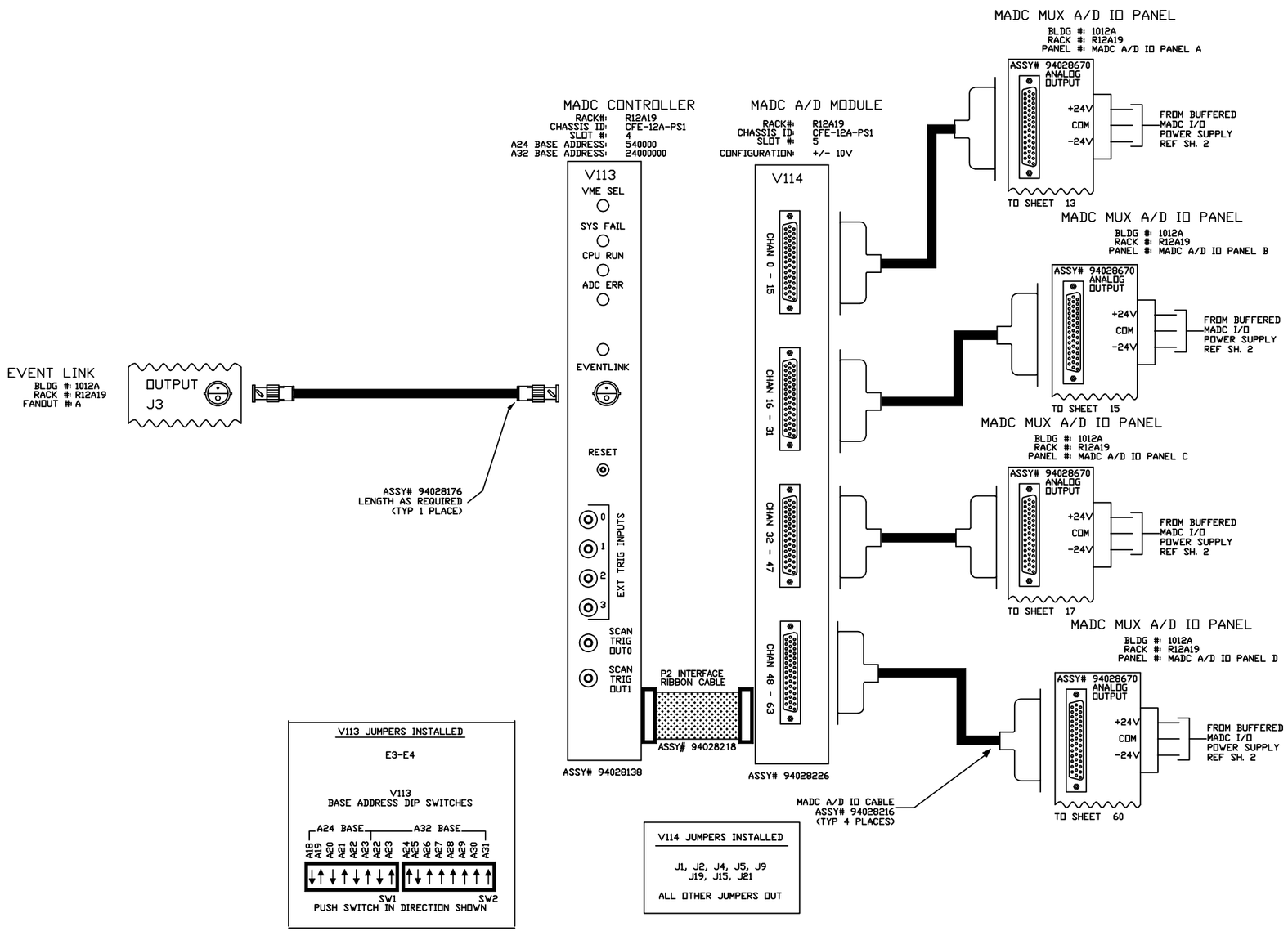

V113 JUMPERS INSTALLED

E3-E4

V113
BASE ADDRESS DIP SWITCHES

PUSH SWITCH IN DIRECTION SHOWN

V114 JUMPERS INSTALLED

J1, J2, J4, J5, J9
J19, J15, J21

ALL OTHER JUMPERS OUT

-3	-2	-1	REF DESIGNATOR	ITEM NO.	DESCRIPTION	MAT'L DWG NO./INL NO.
QTY REQD						

INTERPRET IN GENERAL ACCORDANCE WITH ASME Y14.24M-1989	Q.A. CATEGORY A-3	DATE	BROOKHAVEN NATIONAL LABORATORY
	DRAWN BY Ed Koropsak	6/26/98	UPTON, N.Y. 11973
UNLESS OTHERWISE SPECIFIED DIMENSIONS ARE IN INCHES	CHECKED BY		RHIC CONTROLS WIRING DIAGRAM
DECIMAL TOLERANCES .X ±.030 .XX ±.015 .XXX ±.005 ANGULAR TOLERANCE ± .5°	DESIGN APPROVAL		1012A, VME CHASSIS CFE-12A-PS1
	ENGINEER APPROVAL R. MICHNOFF	6/26/98	MADC SYSTEM
	SUPVR. APPROVAL		SIZE D — 94028579 — REV. A
NA FINISH — BREAK SHARP EDGES MAX. XX MIN. XX	NEXT ASSEMBLY		DRAWING NUMBER
OUTSTANDING ECN			MATERIAL: —— SCALE: FULL WEIGHT: – SHEET 12

1 *AUTOCAD

Schoenfeld, Controls 11/21/2003 8:27 AM 8579_13.dwg

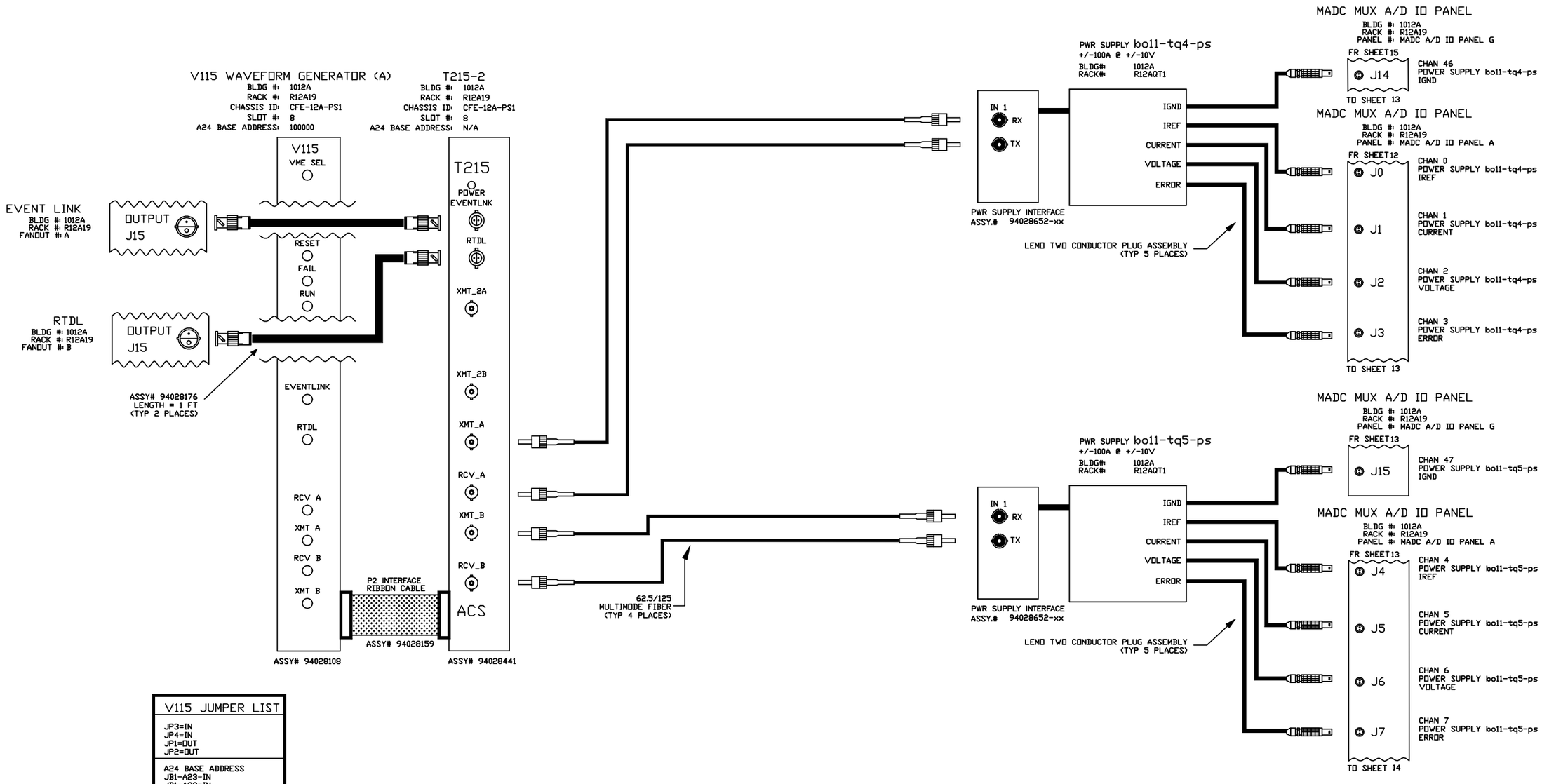

V115 JUMPER LIST
JP3=IN JP4=IN JP1=OUT JP2=OUT
A24 BASE ADDRESS JB1-A23=IN JB1-A22=IN JB1-A21=IN JB1-A20=OUT JB1-A19=IN JB1-A18=IN

REV.	ZONE	ECN NO.	DATE	BY	CKR	APP.

-3	-2	-1	REF DESIGNATOR	ITEM NO.	DESCRIPTION	MAT'L DWG NO.,SHL NO.
QTY REQD						

INTERPRET IN GENERAL ACCORDANCE WITH ASME Y14.24M-1989

UNLESS OTHERWISE SPECIFIED DIMENSIONS ARE IN INCHES

DECIMAL TOLERANCES
.X ±.030
.XX ±.015
.XXX ±.005
ANGULAR TOLERANCE
± .5°

NA FINISH

BREAK SHARP EDGES
MAX. XX MIN. XX

OUTSTANDING ECN

Q.A. CATEGORY A-3		DATE
DRAWN BY	Ed Koropsak	6/26/98
CHECKED BY		
DESIGN APPROVAL		
ENGINEER APPROVAL	R.MICHNOFF	6/26/98
SUPVR. APPROVAL		
NEXT ASSEMBLY		

BROOKHAVEN NATIONAL LABORATORY
UPTON, N.Y. 11973

RHIC CONTROLS WIRING DIAGRAM

1012A, VME CHASSIS CFE-12A-PS1

bo11-tq4-ps/bo11-tq5-ps

SIZE D

DRAWING NUMBER 94028579

REV. A

MATERIAL: ——— SCALE: NA WEIGHT: – SHEET 13

1 *AUTOCAD

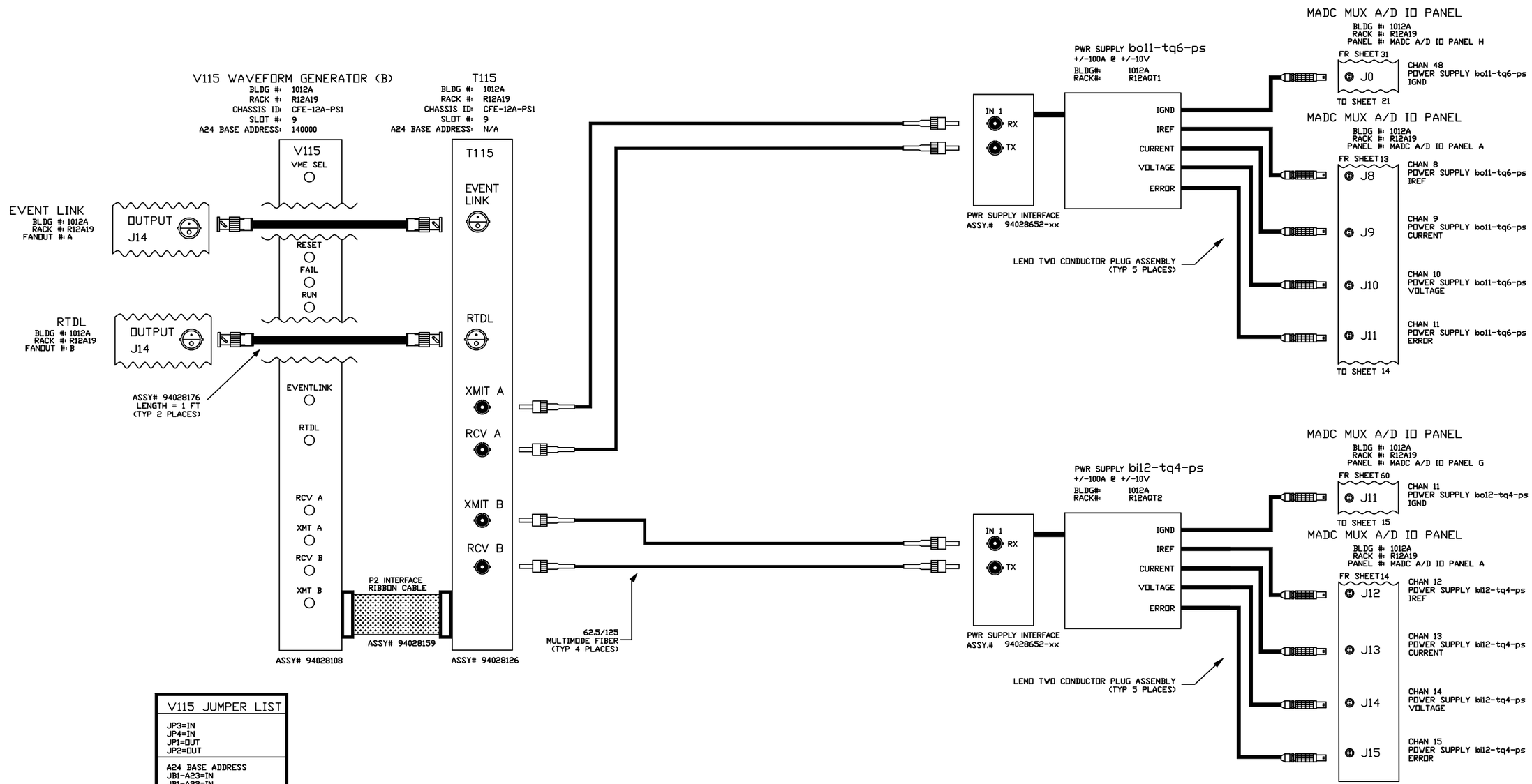

V115 JUMPER LIST
JP3=IN JP4=IN JP1=OUT JP2=OUT
A24 BASE ADDRESS JB1-A23=IN JB1-A22=IN JB1-A21=IN JB1-A20=OUT JB1-A19=IN JB1-A18=OUT

REV.	ZONE	ECN NO.	DATE	BY	CKR	APP.

-3	-2	-1	REF DESIGNATOR	ITEM NO.	DESCRIPTION	MAT'L DWG NO./BNL NO.
QTY REQD						

INTERPRET IN GENERAL ACCORDANCE WITH ASME Y14.24M-1989

UNLESS OTHERWISE SPECIFIED DIMENSIONS ARE IN INCHES

DECIMAL TOLERANCES
.X ±.030
.XX ±.015
.XXX ±.005
ANGULAR TOLERANCE
± .5°

NA FINISH

BREAK SHARP EDGES
MAX. XX MIN. XX

OUTSTANDING ECN

Q.A. CATEGORY A-3		DATE
DRAWN BY	Ed Koropsak	6/26/98
CHECKED BY		
DESIGN APPROVAL		
ENGINEER APPROVAL	R.MICHNOFF	6/26/98
SUPVR. APPROVAL		

NEXT ASSEMBLY

BROOKHAVEN NATIONAL LABORATORY
UPTON, N.Y. 11973

RHIC CONTROLS WIRING DIAGRAM

1012A, VME CHASSIS CFE-12A-PS1

bo11-tq6-ps/bi12-tq4-ps

SIZE D | DRAWING NUMBER 94028579 | REV. A

MATERIAL: ——— SCALE: NA WEIGHT: – SHEET 14

*AUTOCAD

Schoenfeld, Controls 11/21/2003 3:44 PM 8579_15.dwg

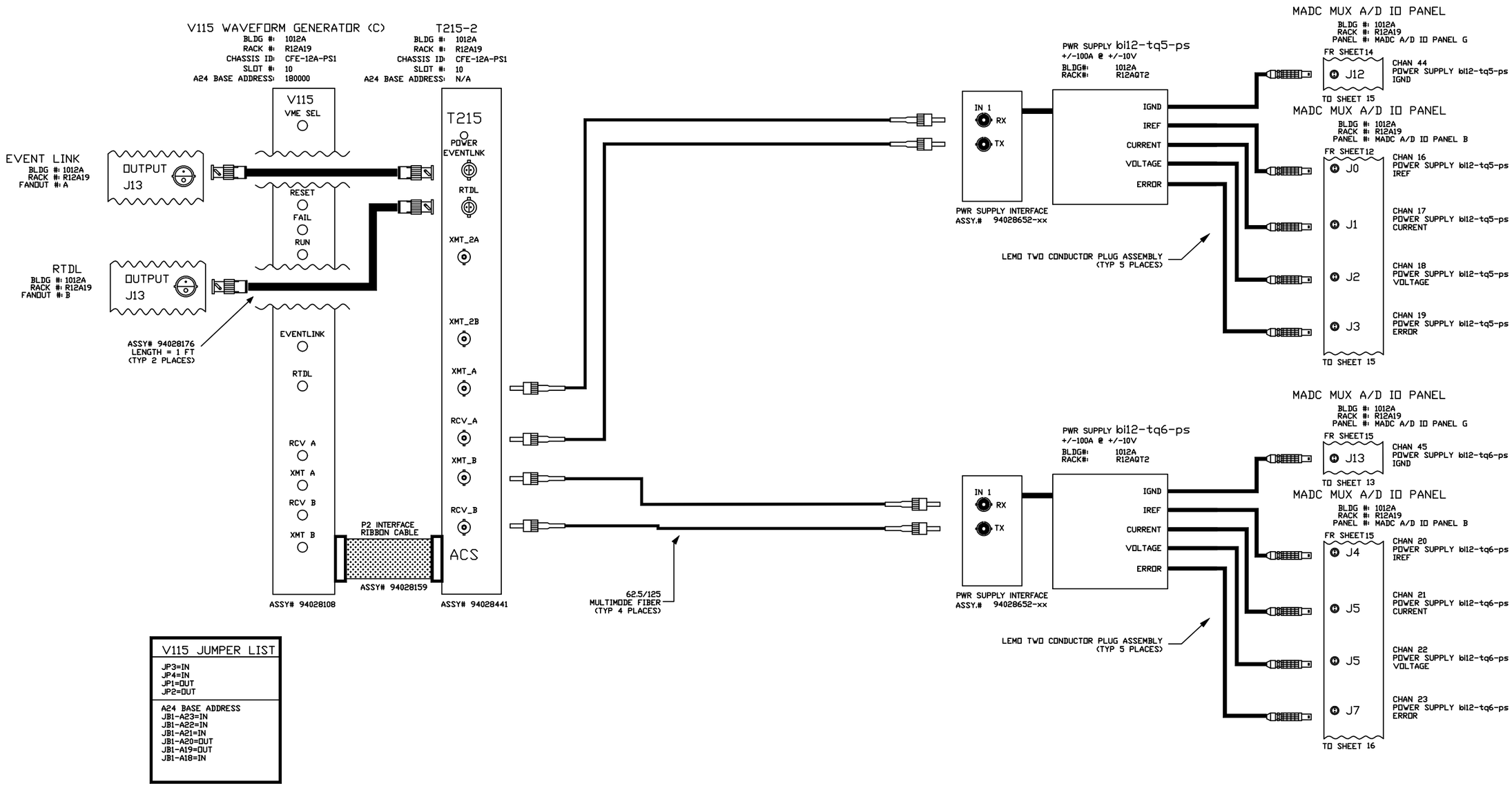

V115 JUMPER LIST
JP3=IN JP4=IN JP1=OUT JP2=OUT
A24 BASE ADDRESS JB1-A23=IN JB1-A22=IN JB1-A21=IN JB1-A20=OUT JB1-A19=OUT JB1-A18=IN

REV.	ZONE	ECN NO.	DATE	BY	CKR	APP.

-3	-2	-1	REF DESIGNATOR	ITEM NO.	DESCRIPTION	MAT'L DWG NO.,SHL NO.
QTY REQD						

INTERPRET IN GENERAL ACCORDANCE WITH ASME Y14.24M-1989

UNLESS OTHERWISE SPECIFIED DIMENSIONS ARE IN INCHES

DECIMAL TOLERANCES .X ±.030 .XX ±.015 .XXX ±.005 ANGULAR TOLERANCE ± .5°

FINISH: NA

BREAK SHARP EDGES MAX. XX MIN. XX

OUTSTANDING ECN

Q.A. CATEGORY A-3		DATE
DRAWN BY	Ed Koropsak	6/26/98
CHECKED BY		
DESIGN APPROVAL		
ENGINEER APPROVAL	R.MICHNOFF	6/26/98
SUPVR. APPROVAL		
NEXT ASSEMBLY		

BROOKHAVEN NATIONAL LABORATORY
UPTON, N.Y. 11973

RHIC CONTROLS WIRING DIAGRAM

1012A, VME CHASSIS CFE-12A-PS1

bi12-tq5-ps/bi12-tq6-ps

SIZE D — DRAWING NUMBER 94028579 — REV. A

MATERIAL: ——— SCALE: NA WEIGHT: – SHEET 15

*AUTOCAD

Schoenfeld, Controls 11/21/2003 8:17 AM 8579_16.dwg

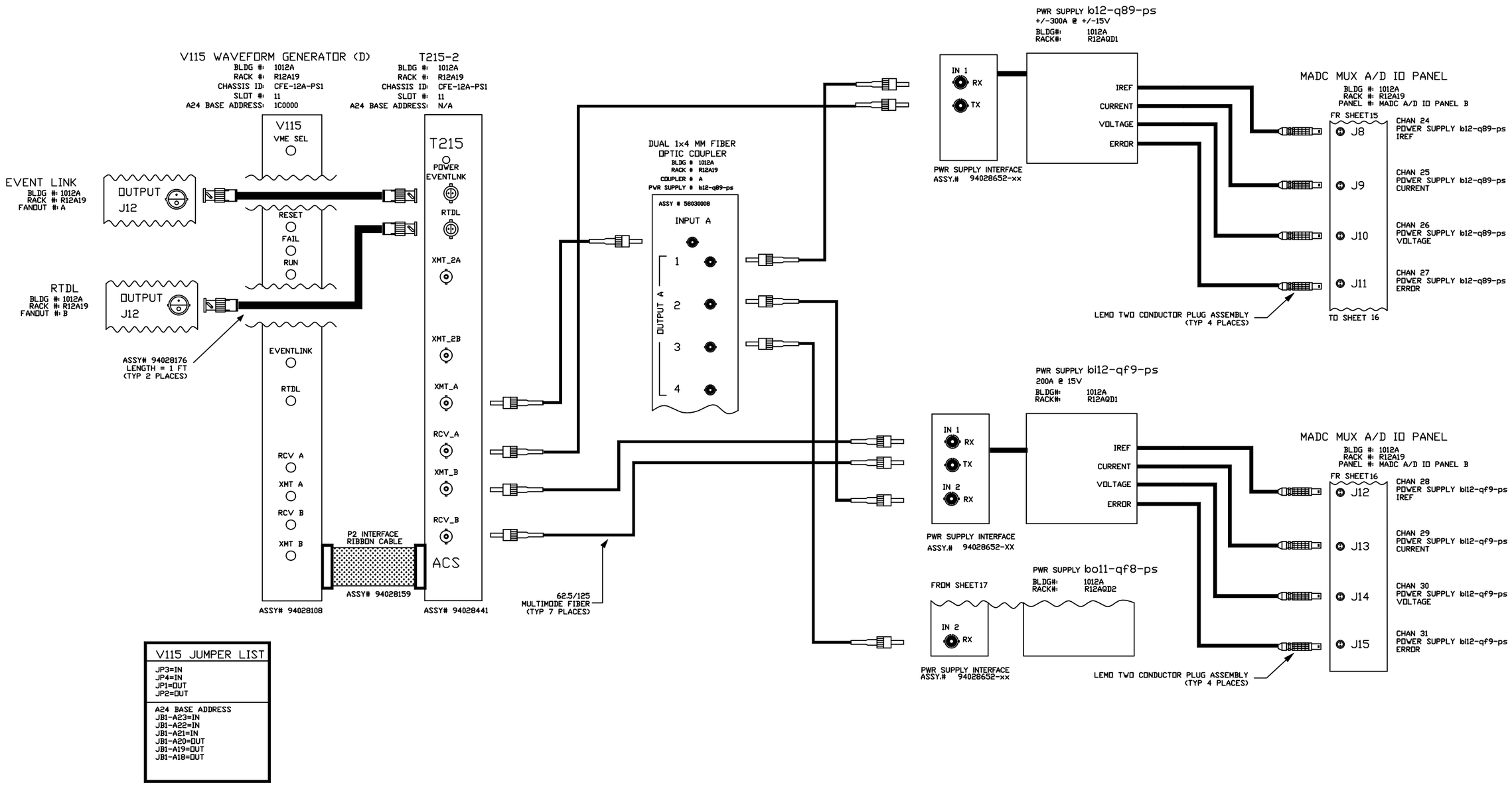

V115 JUMPER LIST
JP3=IN JP4=IN JP1=OUT JP2=OUT
A24 BASE ADDRESS JB1-A23=IN JB1-A22=IN JB1-A21=IN JB1-A20=OUT JB1-A19=OUT JB1-A18=OUT

-3	-2	-1	REF DESIGNATOR	ITEM NO.	DESCRIPTION	MAT'L DWG NO.,BNL NO.
QTY REQD						

INTERPRET IN GENERAL ACCORDANCE WITH ASME Y14.24M-1989

UNLESS OTHERWISE SPECIFIED DIMENSIONS ARE IN INCHES

DECIMAL TOLERANCES
.X ±.030
.XX ±.015
.XXX ±.005
ANGULAR TOLERANCE
± .5°

FINISH: NA

BREAK SHARP EDGES
MAX. XX MIN. XX

OUTSTANDING ECN

Q.A. CATEGORY A-3		DATE
DRAWN BY	Ed Koropsak	6/26/98
CHECKED BY		
DESIGN APPROVAL		
ENGINEER APPROVAL	R.MICHNOFF	6/26/98
SUPVR. APPROVAL		

NEXT ASSEMBLY

BROOKHAVEN NATIONAL LABORATORY
UPTON, N.Y. 11973

RHIC CONTROLS WIRING DIAGRAM

1012A, VME CHASSIS CFE-12A-PS1

b12-q89-ps/bi12-qf9-ps

SIZE D — DRAWING NUMBER 94028579 — REV. A

MATERIAL: ——— SCALE: NA WEIGHT: – SHEET 16

*AUTOCAD

Schoenfeld, Controls 11/20/2003 4:24 PM 8579_17.dwg

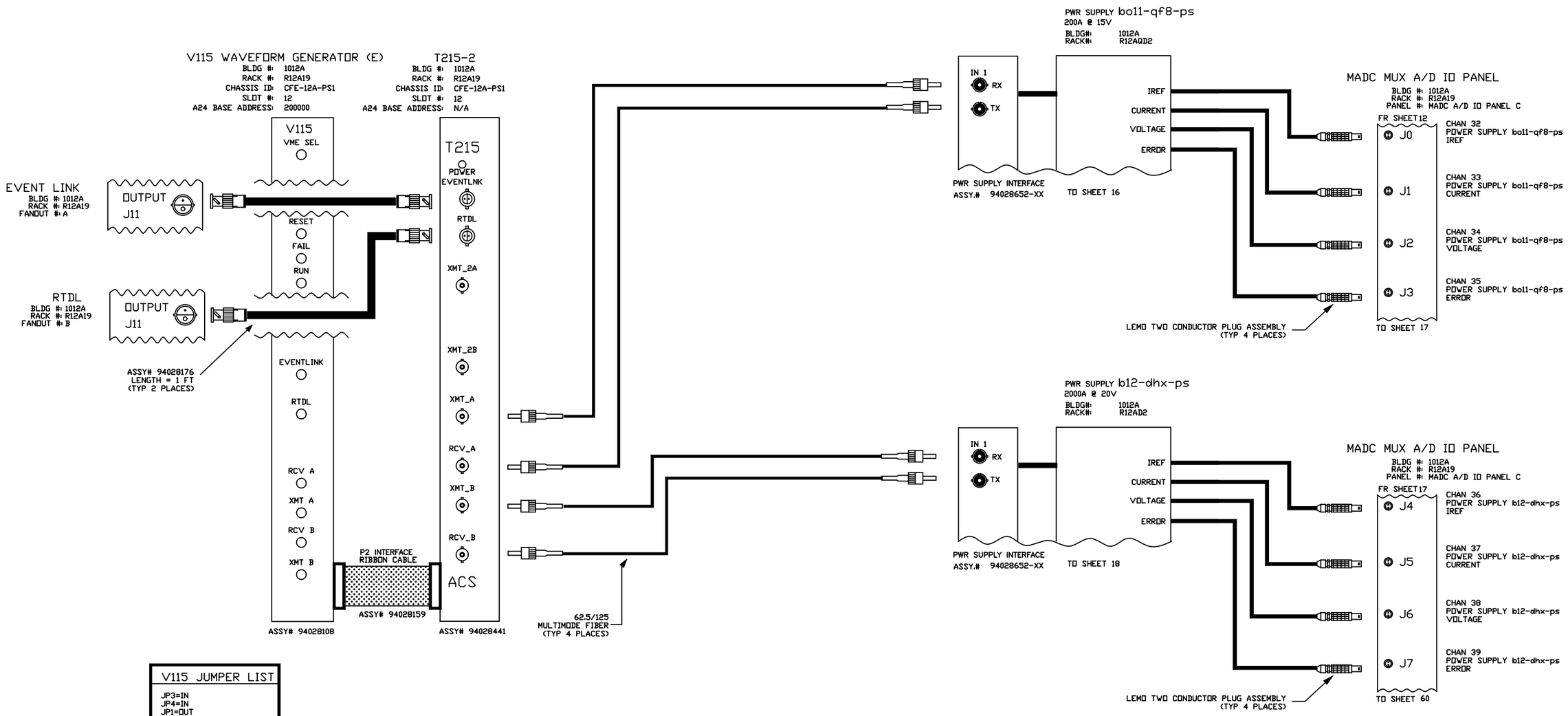

V115 JUMPER LIST
JP3=IN JP4=IN JP1=OUT JP2=OUT
A24 BASE ADDRESS JB1-A23=IN JB1-A22=IN JB1-A21=OUT JB1-A20=IN JB1-A19=IN JB1-A18=IN

REV.	ZONE	ECN NO.	DATE	BY	CKR	APP.

-3	-2	-1	REF DESIGNATOR	ITEM NO.	DESCRIPTION	MAT'L. DWG NO./BNL NO.
QTY REQD						

INTERPRET IN GENERAL ACCORDANCE WITH ASME Y14.24M-1989

UNLESS OTHERWISE SPECIFIED DIMENSIONS ARE IN INCHES

DECIMAL TOLERANCES
.X ±.030
.XX ±.015
.XXX ±.005
ANGULAR TOLERANCE
± .5°

NA FINISH

BREAK SHARP EDGES
MAX. XX MIN. XX

OUTSTANDING ECN

Q.A. CATEGORY A-3		DATE
DRAWN BY	Ed Koropsak	6/26/98
CHECKED BY		
DESIGN APPROVAL		
ENGINEER APPROVAL	R.MICHNOFF	6/26/98
SUPVR. APPROVAL		
NEXT ASSEMBLY		

BROOKHAVEN NATIONAL LABORATORY
UPTON, N.Y. 11973

RHIC CONTROLS WIRING DIAGRAM
1012A, VME CHASSIS CFE-12A-PS1
bo11-qf8-ps/b12-dhx-ps

SIZE D | DRAWING NUMBER 94028579 | REV. A

MATERIAL: ——— SCALE: NA WEIGHT: – SHEET 17

*AUTOCAD

REV.	ZONE	ECN NO.	DATE	BY	CKR	APP.

Schoenfeld, Controls 11/20/2003 4:04 PM 8579_18.dwg

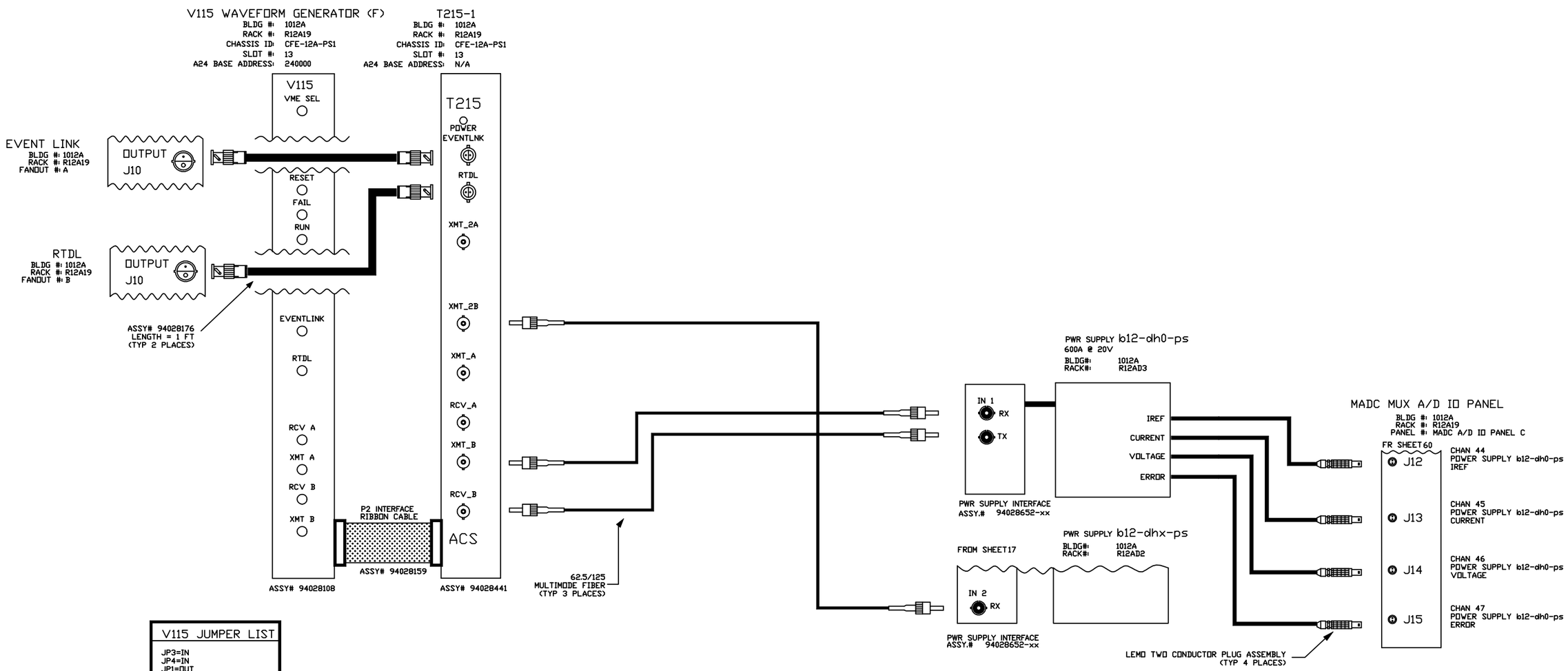

V115 JUMPER LIST
JP3=IN JP4=IN JP1=OUT JP2=OUT
A24 BASE ADDRESS JB1-A23=IN JB1-A22=IN JB1-A21=OUT JB1-A20=IN JB1-A19=IN JB1-A18=OUT

-3	-2	-1	REF DESIGNATOR	ITEM NO.	DESCRIPTION	MAT'L DWG NO./BNL NO.
QTY REQD						

INTERPRET IN GENERAL ACCORDANCE WITH ASME Y14.24M-1989

UNLESS OTHERWISE SPECIFIED DIMENSIONS ARE IN INCHES

DECIMAL TOLERANCES
.X ±.030
.XX ±.015
.XXX ±.005
ANGULAR TOLERANCE ± .5°

NA FINISH

BREAK SHARP EDGES MAX. XX MIN. XX

OUTSTANDING ECN

Q.A. CATEGORY A-3		DATE
DRAWN BY	Ed Koropsak	6/26/98
CHECKED BY		
DESIGN APPROVAL		
ENGINEER APPROVAL	R.MICHNOFF	6/26/98
SUPVR. APPROVAL		

NEXT ASSEMBLY

BROOKHAVEN NATIONAL LABORATORY
UPTON, N.Y. 11973

RHIC CONTROLS WIRING DIAGRAM

1012A, VME CHASSIS CFE-12A-PS1

b12-q7-ps/b12-dh0-ps

SIZE D — DRAWING NUMBER 94028579 — REV. A

MATERIAL: ——— SCALE: NA WEIGHT: – SHEET 18

*AUTOCAD

REV.	ZONE	ECN NO.	DATE	BY	CKR	APP.

Schoenfeld, Controls 11/20/2003 4:01 PM 8579_19.dwg

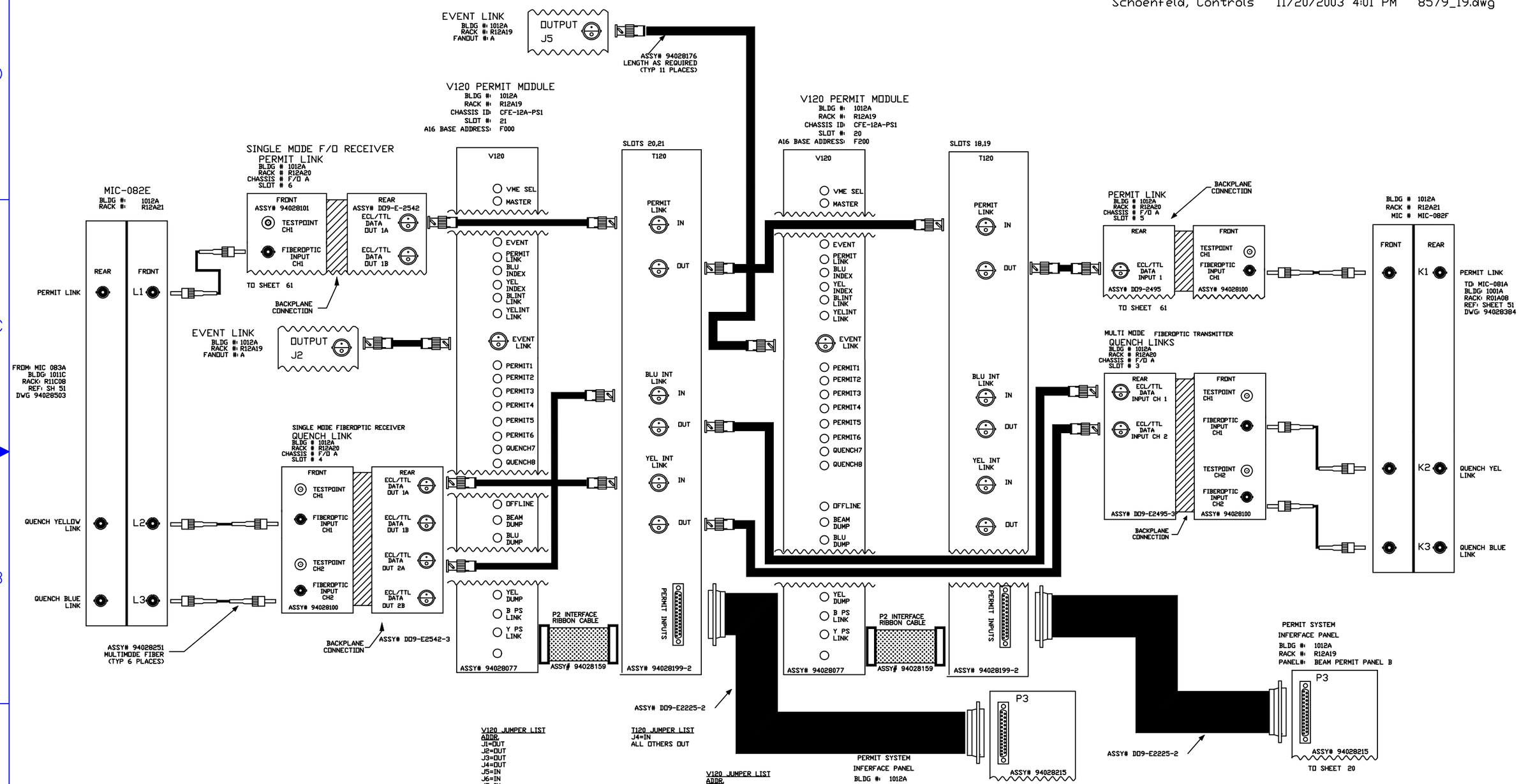

V120 JUMPER LIST
ADDR.
J1=OUT
J2=OUT
J3=OUT
J4=OUT
J5=IN
J6=IN
J7=IN
10.1 MHz
J8=IN
J9=OUT
J10=OUT
QUENCH INPUTS ARE PERMIT
J11=OUT
MASTER
J12=OUT
QUENCH DISABLE
J13=OUT
J14=OUT

T120 JUMPER LIST
J4=IN
ALL OTHERS OUT

V120 JUMPER LIST
ADDR.
J1=OUT
J2=OUT
J3=OUT
J4=OUT
J5=IN
J6=IN
J7=IN
10.1 MHz
J8=IN
J9=OUT
J10=OUT
QUENCH INPUTS ARE PERMIT
J11=IN
MASTER
J12=OUT
QUENCH DISABLE
J13=IN
J14=IN

T120 JUMPER LIST
J4=IN
ALL OTHERS OUT

-3	-2	-1	REF DESIGNATOR	ITEM NO.	DESCRIPTION	MAT'L DWG NO.,SHL NO.
QTY REQD						

INTERPRET IN GENERAL ACCORDANCE WITH ASME Y14.24M-1989	Q.A. CATEGORY A-3	DATE	BROOKHAVEN NATIONAL LABORATORY
	DRAWN BY Ed Koropsak	9/20/99	UPTON, N.Y. 11973
UNLESS OTHERWISE SPECIFIED DIMENSIONS ARE IN INCHES	CHECKED BY		RHIC CONTROLS WIRING DIAGRAM
DECIMAL TOLERANCES .X ±.030 .XX ±.015 .XXX ±.005 ANGULAR TOLERANCE ± .5°	DESIGN APPROVAL		1012A, VME CHASSIS CFE-12A-PS1
	ENGINEER APPROVAL R. MICHNOFF	9/20/99	V120/T120 PERMIT SYSTEM
	SUPVR. APPROVAL		SIZE D — DRAWING NUMBER 94028579 — REV. A
OUTSTANDING ECN — NA — FINISH	BREAK SHARP EDGES MAX. XX MIN. XX	NEXT ASSEMBLY	MATERIAL: — SCALE: NA WEIGHT: — SHEET 19

1 *AUTOCAD

REV.	ZONE	ECN NO.	DATE	BY	CKR	APP.

Schoenfeld, Controls 11/20/2003 3:59 PM 8579_20.dwg

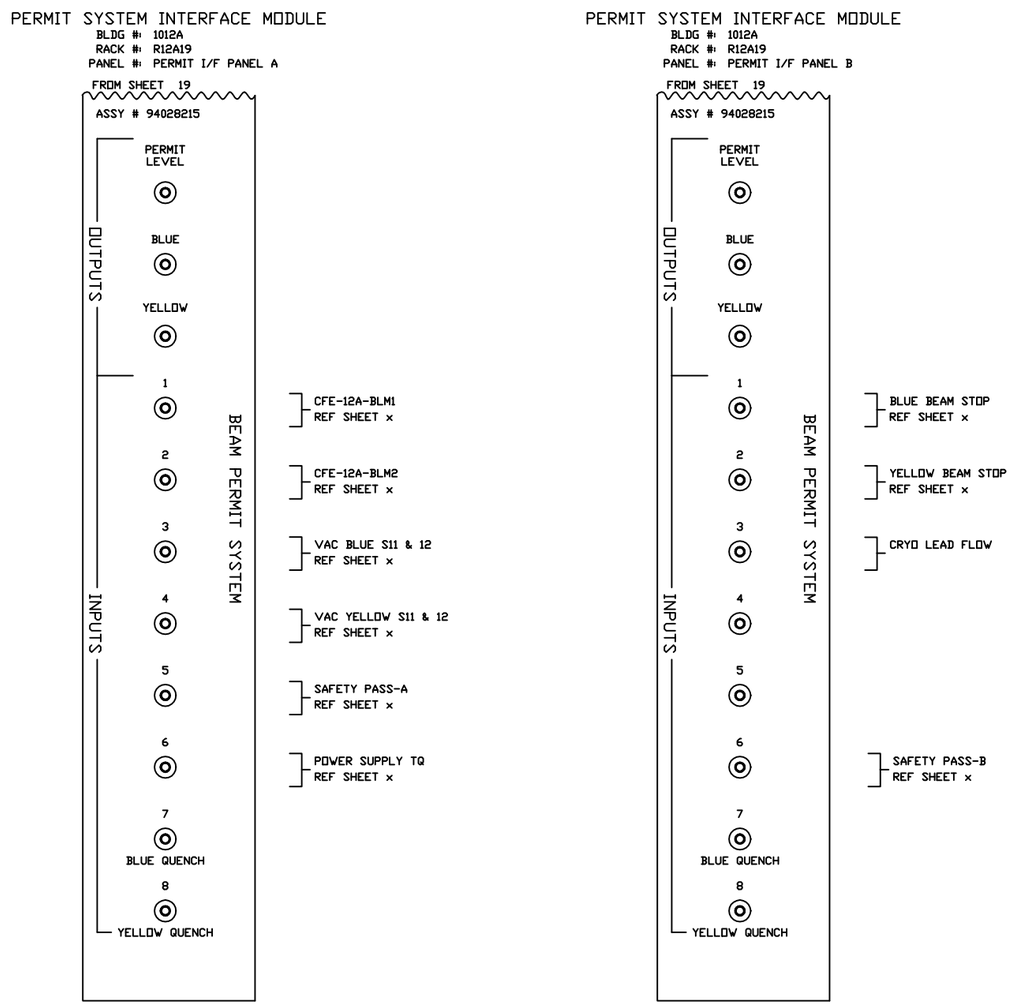

-3	-2	-1	REF DESIGNATOR	ITEM NO.	DESCRIPTION	MAT'L DWG NO./BNL NO.
QTY REQD						

INTERPRET IN GENERAL ACCORDANCE WITH ASME Y14.24M-1989

UNLESS OTHERWISE SPECIFIED DIMENSIONS ARE IN INCHES

DECIMAL TOLERANCES
.X ±.030
.XX ±.015
.XXX ±.005
ANGULAR TOLERANCE
± .5°

NA FINISH

BREAK SHARP EDGES
MAX. XX MIN. XX

OUTSTANDING ECN

Q.A. CATEGORY A-3		DATE
DRAWN BY	Ed Koropsak	6/29/98
CHECKED BY		
DESIGN APPROVAL		
ENGINEER APPROVAL	R. MICHNOFF	6/29/98
SUPVR. APPROVAL		

NEXT ASSEMBLY

BROOKHAVEN NATIONAL LABORATORY
UPTON, N.Y. 11973

RHIC CONTROLS WIRING DIAGRAM

BLDG. 1012A, RACK R12A19

PERMIT SYSTEM INTERFACE PANEL

SIZE D | DRAWING NUMBER 94028579 | REV. A

MATERIAL: ——— SCALE: NA WEIGHT: – SHEET 20

*AUTOCAD

Schoenfeld, Controls 11/20/2003 3:58 PM 8579_21.dwg

DX Heater PS MADC Readbacks

MADC MUX A/D IO PANEL

BLDG #: 1012A
RACK #: R12A19
PANEL #: MADC A/D IO PANEL H

FR SHEET 14

- J1 — CHAN 49, POWER SUPPLY 1012A-11-1-A2, VOLTAGE, g11-dxh-hta
- J2 — CHAN 50, POWER SUPPLY 1012A-11-1-A2, CURRENT, g11-dxh-hta
- J3 — CHAN 51, POWER SUPPLY 1012A-11-1-A2, GND CURRENT, g11-dxh-hta

TO SHEET 21

MADC MUX A/D IO PANEL

BLDG #: 1012A
RACK #: R12A19
PANEL #: MADC A/D IO PANEL H

FR SHEET 21

- J7 — CHAN 55, POWER SUPPLY 1012A-12-1-A1, VOLTAGE, g12-dxh-hta
- J8 — CHAN 56, POWER SUPPLY 1012A-12-1-A1, CURRENT, g12-dxh-hta
- J9 — CHAN 57, POWER SUPPLY 1012A-12-1-A1, GND CURRENT, g12-dxh-hta

TO SHEET 21

MADC MUX A/D IO PANEL

BLDG #: 1012A
RACK #: R12A19
PANEL #: MADC A/D IO PANEL H

FR SHEET 21

- J13 — CHAN 61, 208V-1 BLUE
- J14 — CHAN 62, 208V-2 BLUE
- J15 — CHAN 63, 208V-3 BLUE

MADC MUX A/D IO PANEL

BLDG #: 1012A
RACK #: R12A19
PANEL #: MADC A/D IO PANEL H

FR SHEET 21

- J4 — CHAN 52, POWER SUPPLY 1012A-11-2-B2, VOLTAGE, g11-dxh-htb
- J5 — CHAN 53, POWER SUPPLY 1012A-11-2-B2, CURRENT, g11-dxh-htb
- J6 — CHAN 54, POWER SUPPLY 1012A-11-2-B2, GND CURRENT, g11-dxh-htb

TO SHEET 21

MADC MUX A/D IO PANEL

BLDG #: 1012A
RACK #: R12A19
PANEL #: MADC A/D IO PANEL H

FR SHEET 21

- J10 — CHAN 58, POWER SUPPLY 1012A-12-2-B1, VOLTAGE, g12-dxh-htb
- J11 — CHAN 59, POWER SUPPLY 1012A-12-2-B1, CURRENT, g12-dxh-htb
- J12 — CHAN 60, POWER SUPPLY 1012A-12-2-B1, GND CURRENT, g12-dxh-htb

TO SHEET 21

-3	-2	-1	REF DESIGNATOR	ITEM NO.	DESCRIPTION	MAT'L DWG NO./INL NO.
QTY REQD						

INTERPRET IN GENERAL ACCORDANCE WITH ASME Y14.24M-1989

UNLESS OTHERWISE SPECIFIED DIMENSIONS ARE IN INCHES

DECIMAL TOLERANCES
.X ±.030
.XX ±.015
.XXX ±.005
ANGULAR TOLERANCE
± .5°

NA FINISH — BREAK SHARP EDGES MAX. XX MIN. XX

OUTSTANDING ECN

Q.A. CATEGORY A-3		DATE
DRAWN BY	Ed Koropsak	6/29/98
CHECKED BY		
DESIGN APPROVAL		
ENGINEER APPROVAL	R. MICHNOFF	6/29/98
SUPVR. APPROVAL		

NEXT ASSEMBLY

BROOKHAVEN NATIONAL LABORATORY
UPTON, N.Y. 11973

RHIC CONTROLS WIRING DIAGRAM
1012A, VME CHASSIS CFE-12A-PS1
DX HEATER PS MADC READBACKS

SIZE D — DRAWING NUMBER 94028579 — REV. A

MATERIAL: ——— SCALE: NA WEIGHT: – SHEET 21

*AUTOCAD

REV.	ZONE	ECN NO.	DATE	BY	CKR	APP.

Schoenfeld, Controls 11/21/2003 4:05 PM 8579_22.dwg

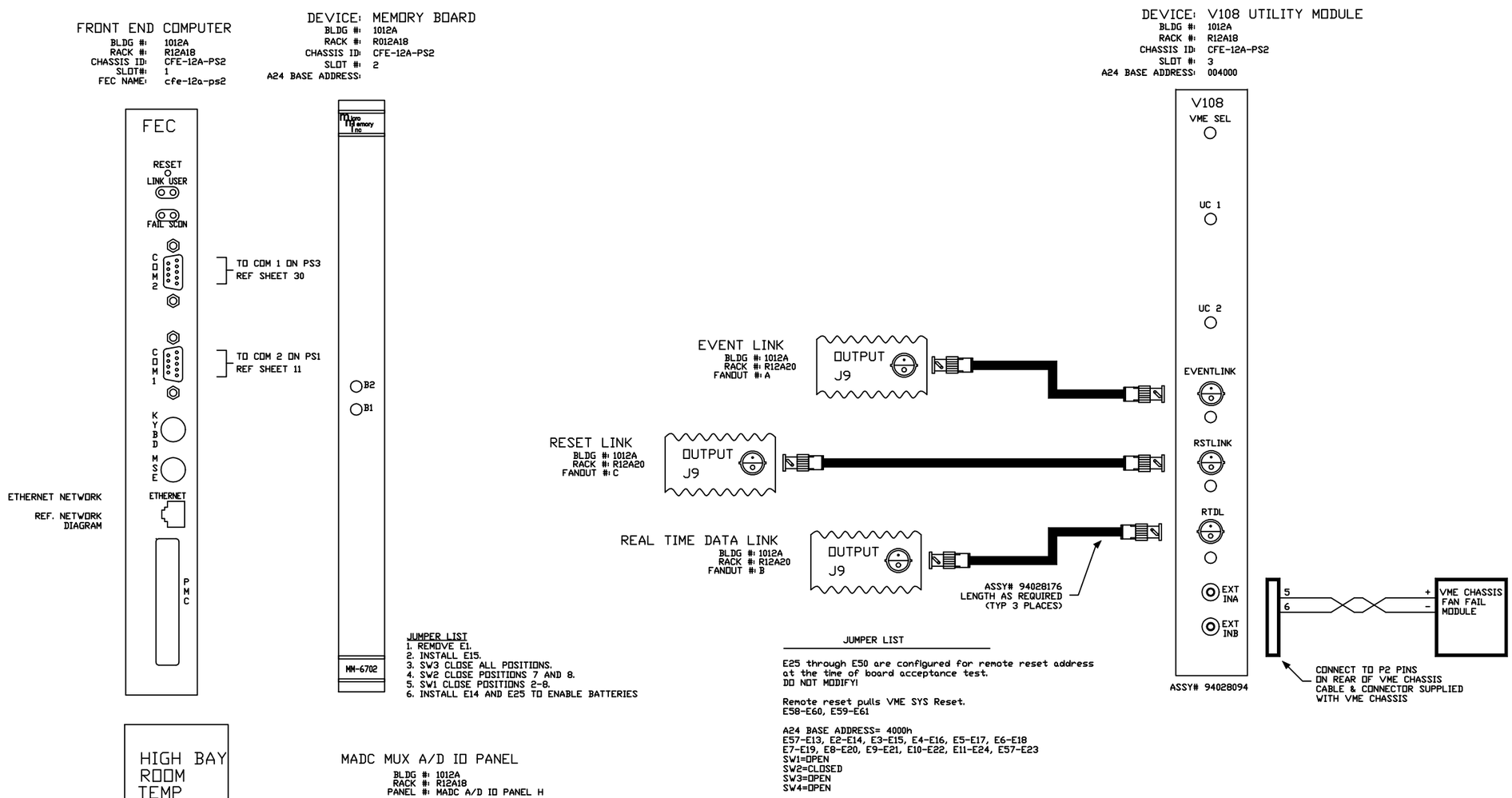

-3	-2	-1	REF DESIGNATOR	ITEM NO.	DESCRIPTION	MAT'L DWG NO.,BNL NO.
QTY REQD						

INTERPRET IN GENERAL ACCORDANCE WITH ASME Y14.24M-1989	Q.A. CATEGORY A-3	DATE	BROOKHAVEN NATIONAL LABORATORY UPTON, N.Y. 11973
	DRAWN BY Ed Koropsak	6/26/98	
UNLESS OTHERWISE SPECIFIED DIMENSIONS ARE IN INCHES	CHECKED BY		RHIC CONTROLS WIRING DIAGRAM
DECIMAL TOLERANCES .X ±.030 .XX ±.015 .XXX ±.005 ANGULAR TOLERANCE ± .5°	DESIGN APPROVAL		1012A, VME CHASSIS CFE-12A-PS2
	ENGINEER APPROVAL R. MICHNOFF	6/26/98	FT END COMP/V108 UTIL MODULE
	SUPVR. APPROVAL		SIZE D — DRAWING NUMBER 94028579 — REV. A
OUTSTANDING ECN	NA FINISH	BREAK SHARP EDGES MAX. XX MIN. XX	NEXT ASSEMBLY

MATERIAL: ——— SCALE: FULL WEIGHT: – SHEET 22

1 *AUTOCAD

Schoenfeld, Controls 11/20/2003 3:51 PM 8579_23.dwg

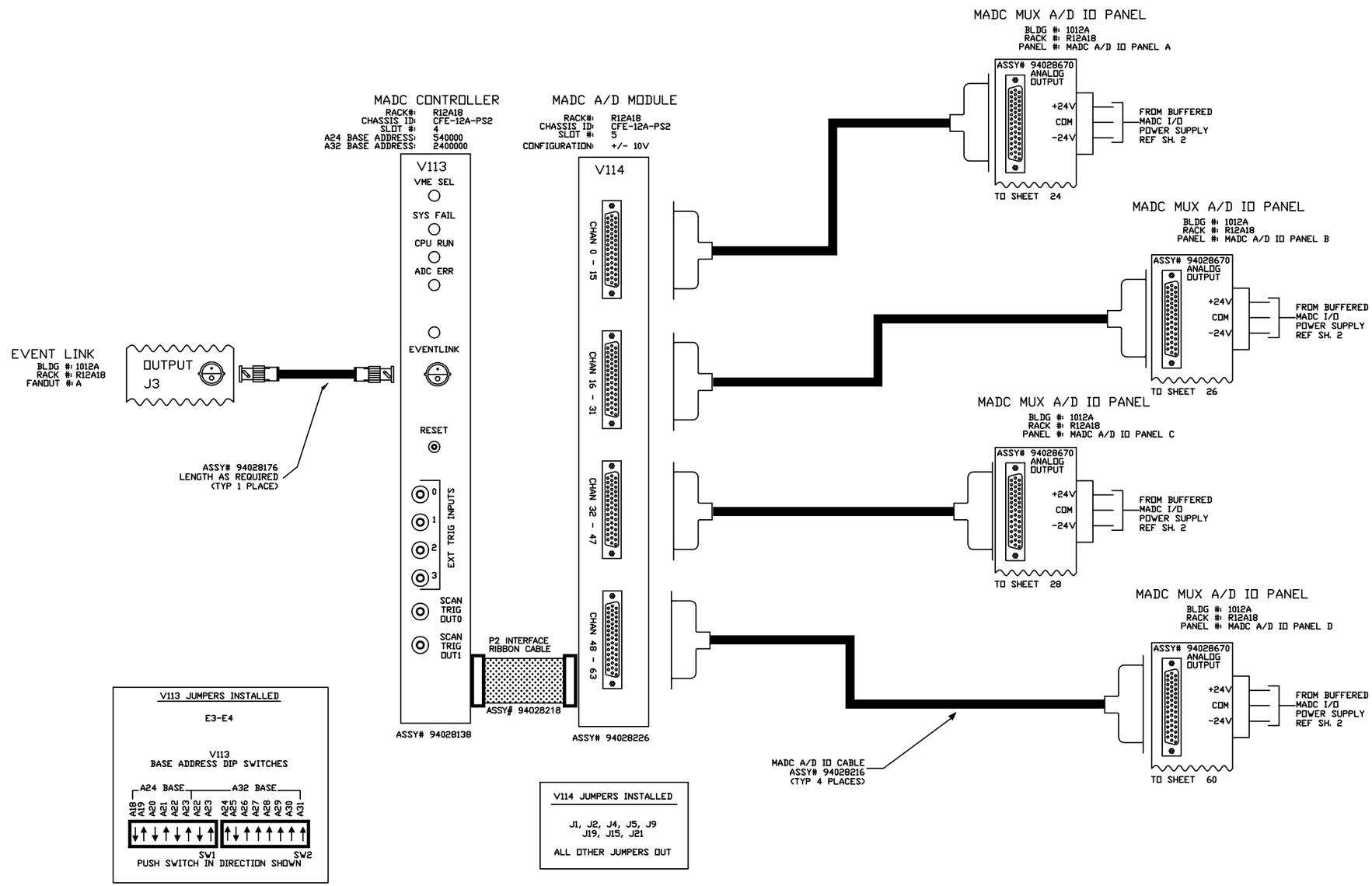

V113 JUMPERS INSTALLED

E3-E4

V113
BASE ADDRESS DIP SWITCHES

PUSH SWITCH IN DIRECTION SHOWN

V114 JUMPERS INSTALLED

J1, J2, J4, J5, J9
J19, J15, J21

ALL OTHER JUMPERS OUT

REV.	ZONE	ECN NO.	DATE	BY	CKR	APP.

-3	-2	-1	REF DESIGNATOR	ITEM NO.	DESCRIPTION	MAT'L DWG NO./BHL NO.
QTY REQD						

INTERPRET IN GENERAL ACCORDANCE WITH ASME Y14.24M-1989

UNLESS OTHERWISE SPECIFIED DIMENSIONS ARE IN INCHES

DECIMAL TOLERANCES
.X ±.030
.XX ±.015
.XXX ±.005
ANGULAR TOLERANCE
± .5°

NA FINISH

BREAK SHARP EDGES
MAX. XX MIN. XX

OUTSTANDING ECN

Q.A. CATEGORY A-3		DATE
DRAWN BY	Ed Koropsak	6/26/98
CHECKED BY		
DESIGN APPROVAL		
ENGINEER APPROVAL	R. MICHNOFF	6/26/98
SUPVR. APPROVAL		

NEXT ASSEMBLY

BROOKHAVEN NATIONAL LABORATORY
UPTON, N.Y. 11973

RHIC CONTROLS WIRING DIAGRAM
1012A, VME CHASSIS CFE-12A-PS2
MADC SYSTEM

SIZE D
DRAWING NUMBER 94028579
REV. A

MATERIAL: ——— SCALE: NA WEIGHT: – SHEET 23

1 *AUTOCAD

REV.	ZONE	ECN NO.	DATE	BY	CKR	APP.

Schoenfeld, Controls 11/20/2003 3:50 PM 8579_24.dwg

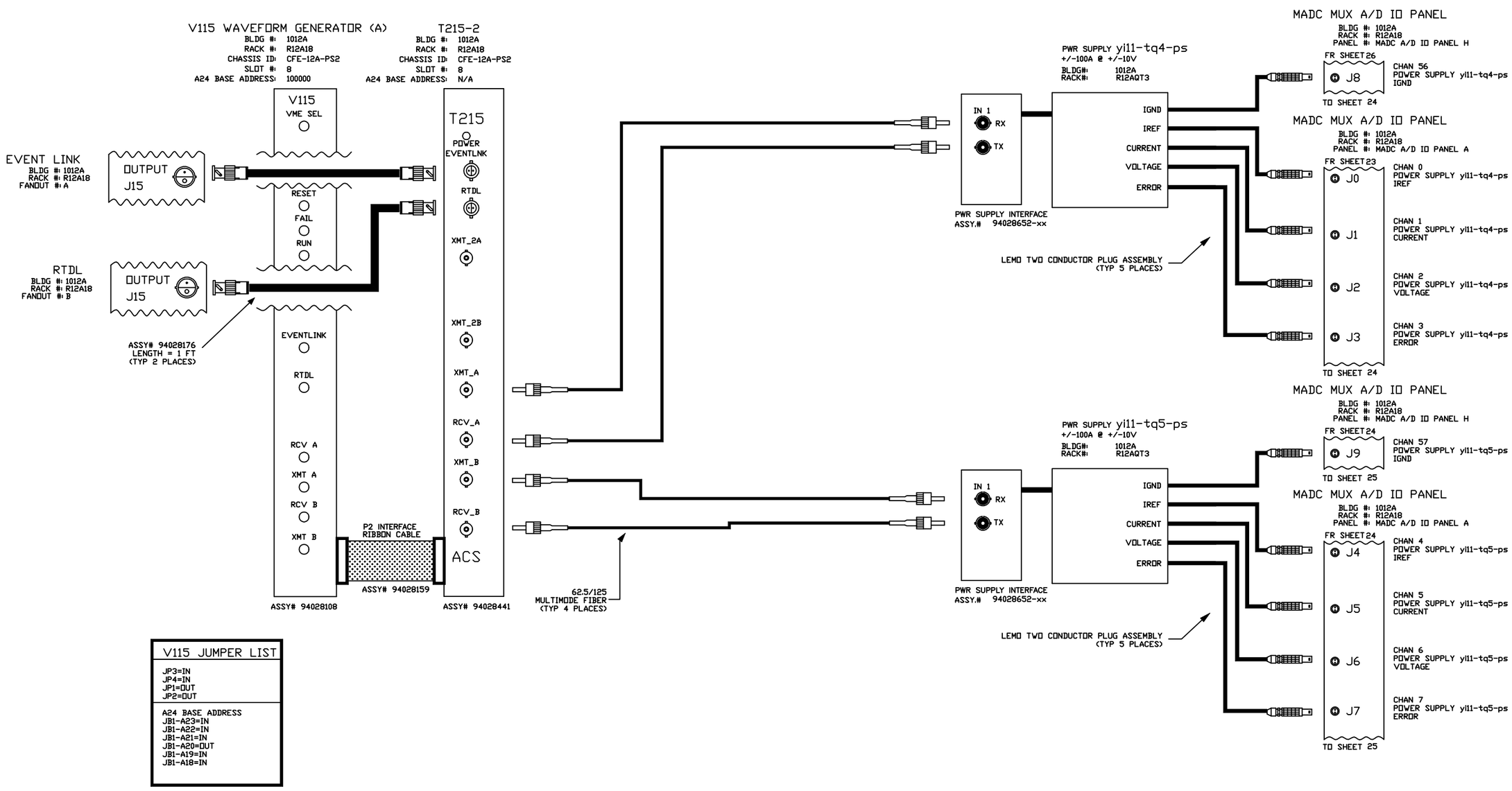

V115 JUMPER LIST
JP3=IN JP4=IN JP1=OUT JP2=OUT
A24 BASE ADDRESS JB1-A23=IN JB1-A22=IN JB1-A21=IN JB1-A20=OUT JB1-A19=IN JB1-A18=IN

-3	-2	-1	REF DESIGNATOR	ITEM NO.	DESCRIPTION	MAT'L DWG NO./BNL NO.
QTY REQD						

INTERPRET IN GENERAL ACCORDANCE WITH ASME Y14.24M-1989

UNLESS OTHERWISE SPECIFIED DIMENSIONS ARE IN INCHES

DECIMAL TOLERANCES
.X ±.030
.XX ±.015
.XXX ±.005
ANGULAR TOLERANCE
± .5°

FINISH: NA

BREAK SHARP EDGES MAX. XX MIN. XX

OUTSTANDING ECN

Q.A. CATEGORY A-3		DATE
DRAWN BY	Ed Koropsak	6/26/98
CHECKED BY		
DESIGN APPROVAL		
ENGINEER APPROVAL	R.MICHNOFF	6/26/98
SUPVR. APPROVAL		

NEXT ASSEMBLY

BROOKHAVEN NATIONAL LABORATORY
UPTON, N.Y. 11973

RHIC CONTROLS WIRING DIAGRAM

1012A, VME CHASSIS CFE-12A-PS2

yi11-tq4-ps/yi11-tq5-ps

SIZE D — DRAWING NUMBER 94028579 — REV. A

MATERIAL: ——— SCALE: NA WEIGHT: – SHEET 24

*AUTOCAD

Schoenfeld, Controls 11/20/2003 3:49 PM 8579_25.dwg

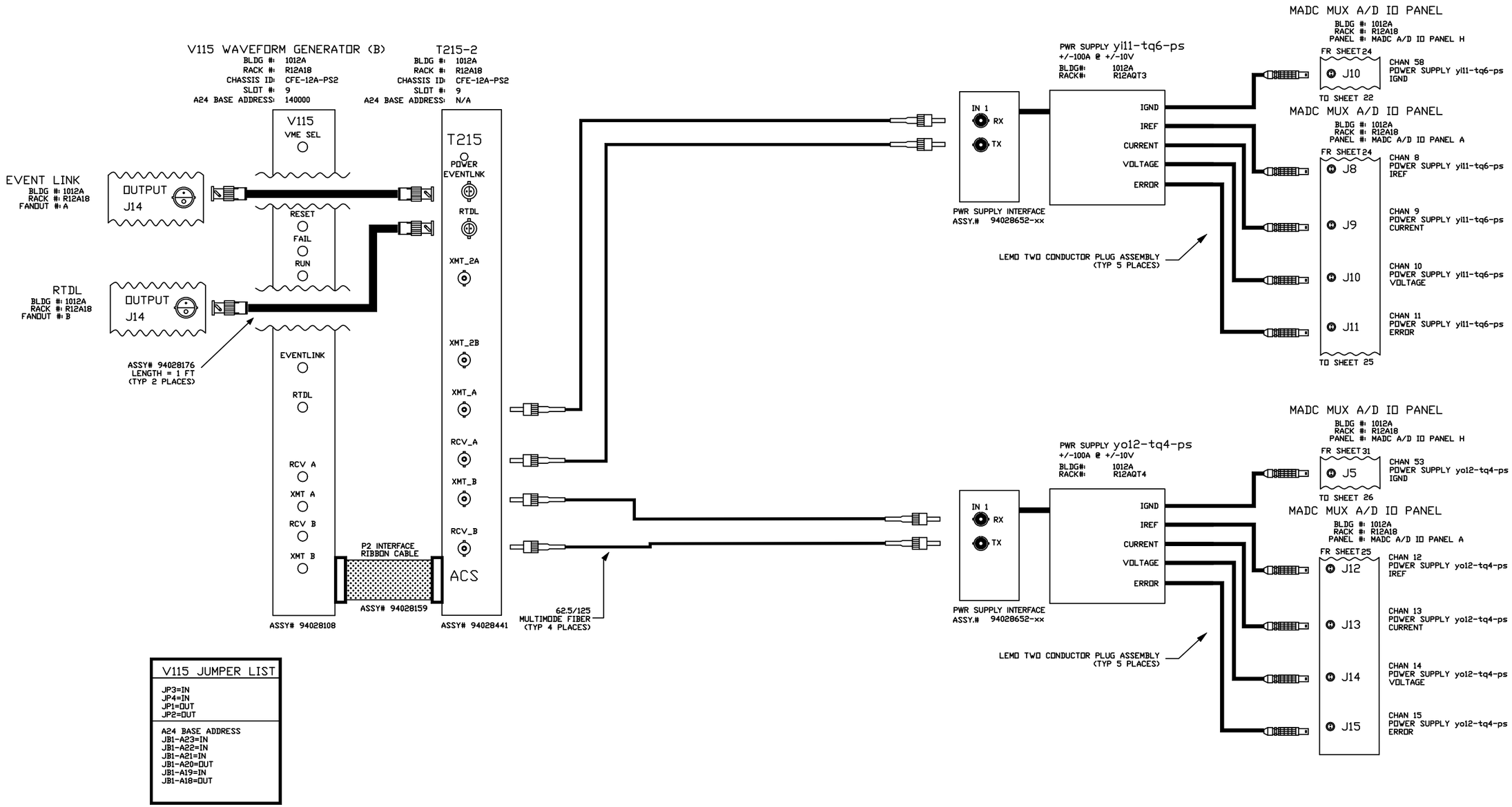

V115 JUMPER LIST
JP3=IN JP4=IN JP1=OUT JP2=OUT
A24 BASE ADDRESS JB1-A23=IN JB1-A22=IN JB1-A21=IN JB1-A20=OUT JB1-A19=IN JB1-A18=OUT

REV.	ZONE	ECN NO.	DATE	BY	CKR	APP.

-3	-2	-1	REF DESIGNATOR	ITEM NO.	DESCRIPTION	MAT'L DWG NO./BNL NO.
QTY REQD						

INTERPRET IN GENERAL ACCORDANCE WITH ASME Y14.24M-1989

UNLESS OTHERWISE SPECIFIED DIMENSIONS ARE IN INCHES

DECIMAL TOLERANCES .X ±.030 .XX ±.015 .XXX ±.005 ANGULAR TOLERANCE ± .5°

FINISH NA BREAK SHARP EDGES MAX. XX MIN. XX

OUTSTANDING ECN

Q.A. CATEGORY A-3		DATE
DRAWN BY	Ed Koropsak	6/26/98
CHECKED BY		
DESIGN APPROVAL		
ENGINEER APPROVAL	R.MICHNOFF	6/26/98
SUPVR. APPROVAL		

NEXT ASSEMBLY

BROOKHAVEN NATIONAL LABORATORY
UPTON, N.Y. 11973

RHIC CONTROLS WIRING DIAGRAM

1012A, VME CHASSIS CFE-12A-PS2

yi11-tq6-ps/yo12-tq4-ps

SIZE D — DRAWING NUMBER 94028579 — REV. A

MATERIAL: ——— SCALE: NA WEIGHT: – SHEET 25

*AUTOCAD

Schoenfeld, Controls 11/20/2003 3:46 PM 8579_26.dwg

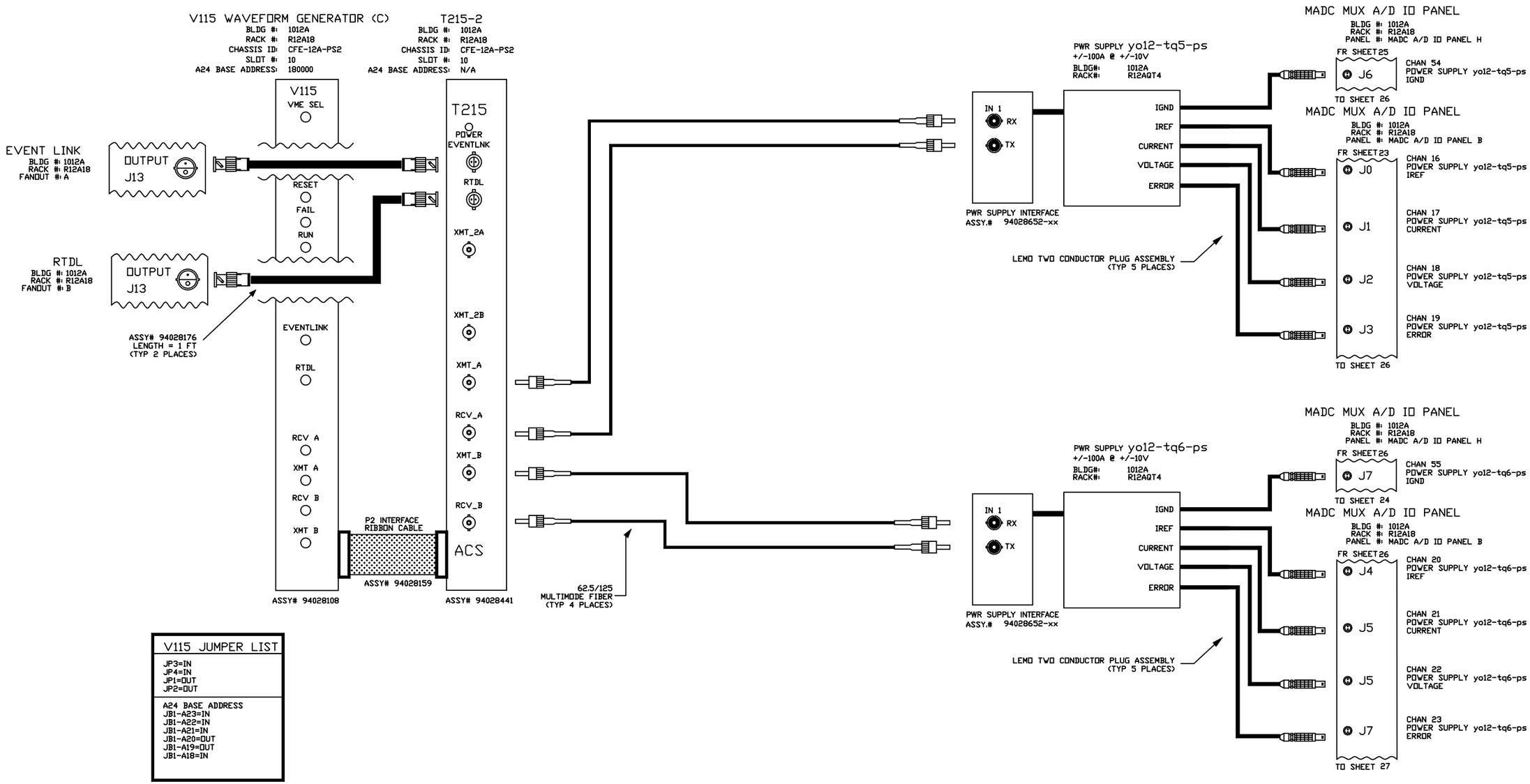

V115 JUMPER LIST
JP3=IN JP4=IN JP1=OUT JP2=OUT
A24 BASE ADDRESS JB1-A23=IN JB1-A22=IN JB1-A21=IN JB1-A20=OUT JB1-A19=OUT JB1-A18=IN

-3	-2	-1	REF DESIGNATOR	ITEM NO.	DESCRIPTION	MAT'L DWG NO.,BNL NO.
QTY REQD						

INTERPRET IN GENERAL ACCORDANCE WITH ASME Y14.24M-1989

UNLESS OTHERWISE SPECIFIED DIMENSIONS ARE IN INCHES

DECIMAL TOLERANCES
.X ±.030
.XX ±.015
.XXX ±.005
ANGULAR TOLERANCE
± .5°

NA FINISH

BREAK SHARP EDGES
MAX. XX MIN. XX

OUTSTANDING ECN

Q.A. CATEGORY A-3		DATE
DRAWN BY	Ed Koropsak	6/26/98
CHECKED BY		
DESIGN APPROVAL		
ENGINEER APPROVAL	R.MICHNOFF	6/26/98
SUPVR. APPROVAL		

NEXT ASSEMBLY

BROOKHAVEN NATIONAL LABORATORY
UPTON, N.Y. 11973

RHIC CONTROLS WIRING DIAGRAM
1012A, VME CHASSIS CFE-12A-PS2
yo12-tq5-ps/yo12-tq6-ps

SIZE D
94028579
DRAWING NUMBER
REV. A

MATERIAL: ——— SCALE: NA WEIGHT: – SHEET 26

*AUTOCAD

Schoenfeld, Controls 11/20/2003 3:26 PM 8579_27.dwg

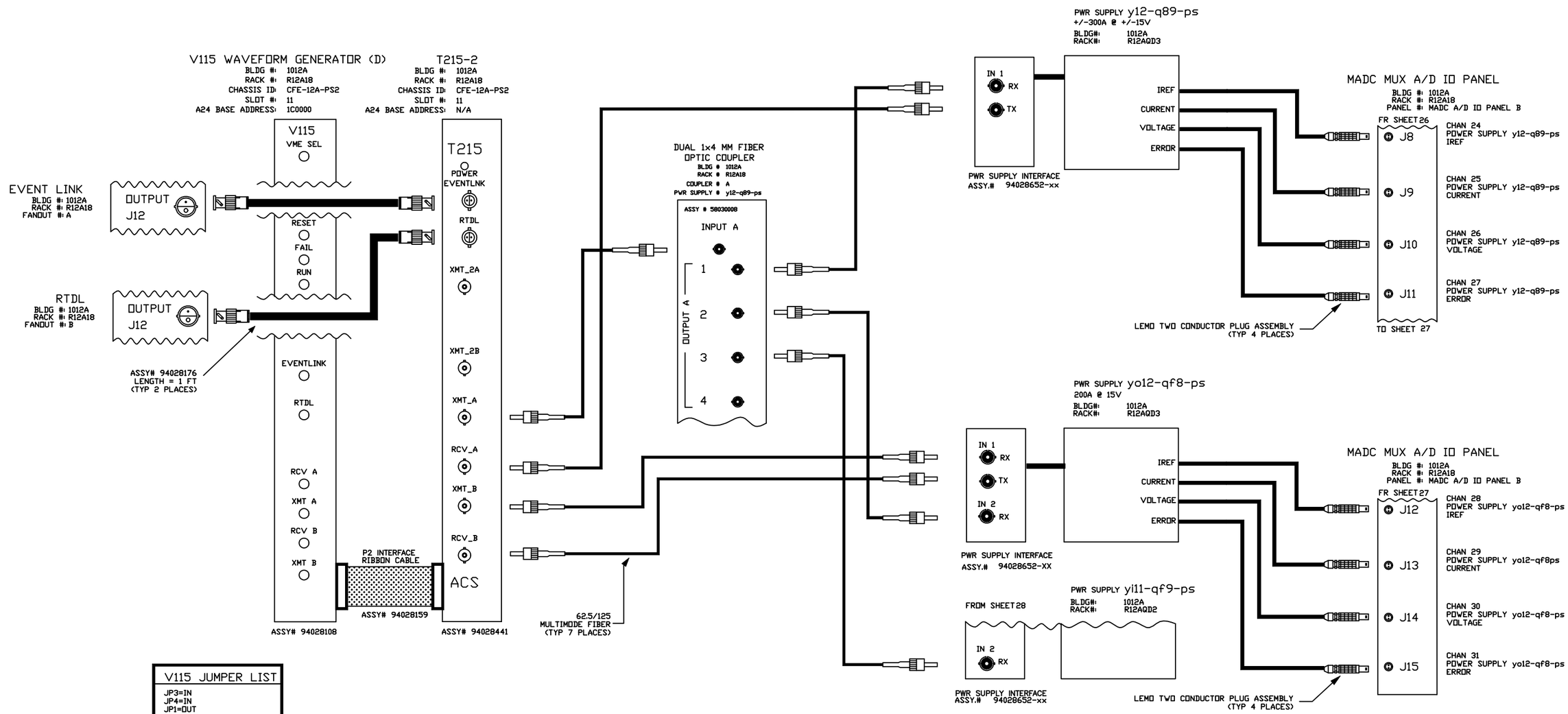

V115 JUMPER LIST
JP3=IN JP4=IN JP1=OUT JP2=OUT
A24 BASE ADDRESS JB1-A23=IN JB1-A22=IN JB1-A21=IN JB1-A20=OUT JB1-A19=OUT JB1-A18=OUT

REV.	ZONE	ECN NO.	DATE	BY	CKR	APP.

-3	-2	-1	REF DESIGNATOR	ITEM NO.	DESCRIPTION	MAT'L. DWG NO./JAN. NO.
QTY REQD						

INTERPRET IN GENERAL ACCORDANCE WITH ASME Y14.24M-1989

UNLESS OTHERWISE SPECIFIED DIMENSIONS ARE IN INCHES

DECIMAL TOLERANCES
.X ±.030
.XX ±.015
.XXX ±.005
ANGULAR TOLERANCE
± .5°

NA FINISH

BREAK SHARP EDGES
MAX. XX MIN. XX

OUTSTANDING ECN

Q.A. CATEGORY A-3		DATE
DRAWN BY	Ed Koropsak	6/26/98
CHECKED BY		
DESIGN APPROVAL		
ENGINEER APPROVAL	R.MICHNOFF	6/26/98
SUPVR. APPROVAL		
NEXT ASSEMBLY		

BROOKHAVEN NATIONAL LABORATORY
UPTON, N.Y. 11973

RHIC CONTROLS WIRING DIAGRAM

1012A, VME CHASSIS CFE-12A-PS2

y12-q89-ps/yo12-qf8-ps

SIZE D — 94028579 — REV. A

DRAWING NUMBER

MATERIAL: ——— SCALE: NA WEIGHT: – SHEET 27

*AUTOCAD

Schoenfeld, Controls 11/20/2003 2:56 PM 8579_28.dwg

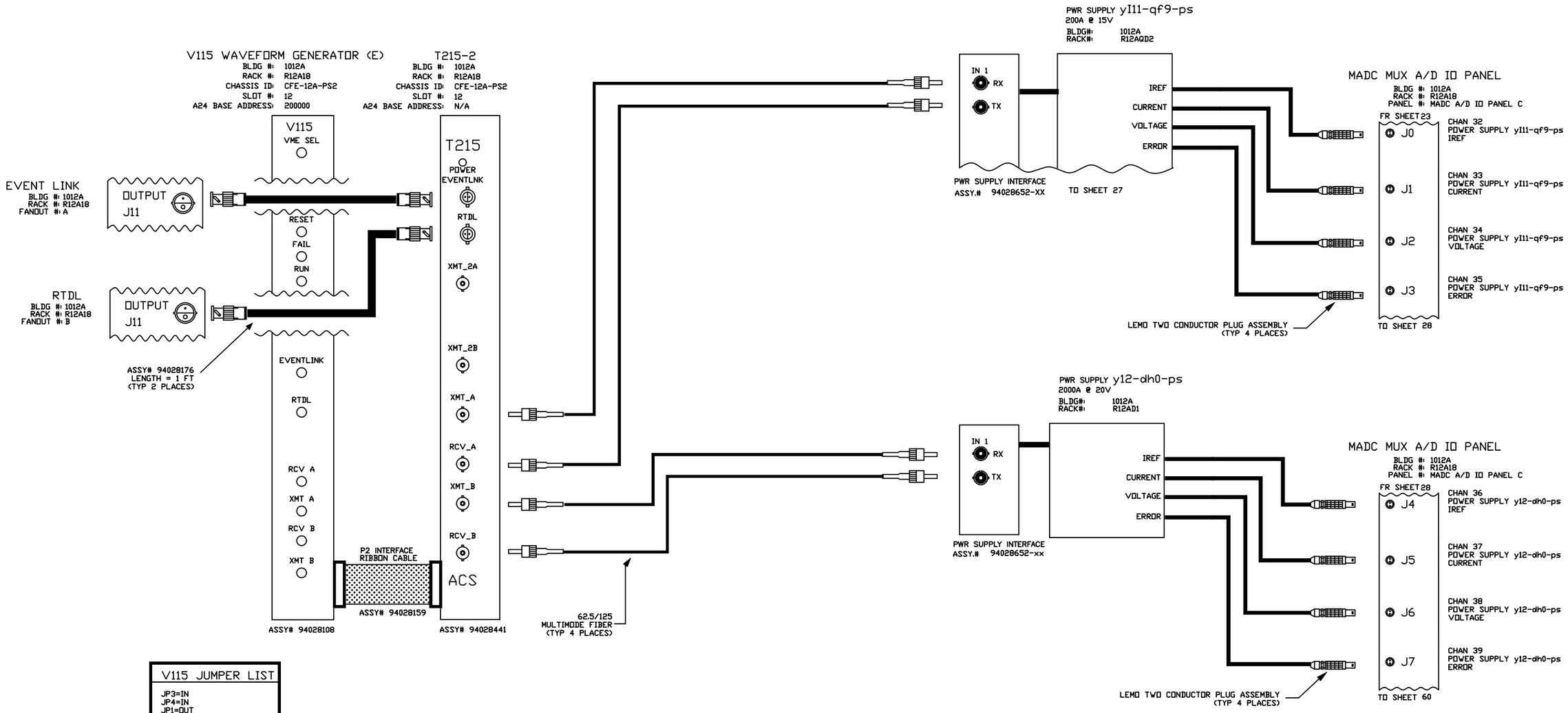

V115 JUMPER LIST

JP3=IN
JP4=IN
JP1=OUT
JP2=OUT

A24 BASE ADDRESS
JB1-A23=IN
JB1-A22=IN
JB1-A21=OUT
JB1-A20=IN
JB1-A19=IN
JB1-A18=IN

REV.	ZONE	ECN NO.	DATE	BY	CKR	APP.

-3	-2	-1	REF DESIGNATOR	ITEM NO.	DESCRIPTION	MAT'L. DWG NO./INL NO.
QTY REQD						

INTERPRET IN GENERAL ACCORDANCE WITH ASME Y14.24M-1989

UNLESS OTHERWISE SPECIFIED DIMENSIONS ARE IN INCHES

DECIMAL TOLERANCES
.X ±.030
.XX ±.015
.XXX ±.005
ANGULAR TOLERANCE
± .5°

NA FINISH

BREAK SHARP EDGES
MAX. XX MIN. XX

OUTSTANDING ECN

Q.A. CATEGORY A-3		DATE
DRAWN BY	Ed Koropsak	6/26/98
CHECKED BY		
DESIGN APPROVAL		
ENGINEER APPROVAL	R.MICHNOFF	6/26/98
SUPVR. APPROVAL		

NEXT ASSEMBLY

BROOKHAVEN NATIONAL LABORATORY
UPTON, N.Y. 11973

RHIC CONTROLS WIRING DIAGRAM
1012A, VME CHASSIS CFE-12A-PS2
yI11-qf9-ps/y12-dh0-ps

SIZE D | 94028579 | REV. A
DRAWING NUMBER

MATERIAL: ——— SCALE: NA WEIGHT: – SHEET 28

*AUTOCAD

Schoenfeld, Controls 11/5/2004 2:56 PM 8579_29.dwg

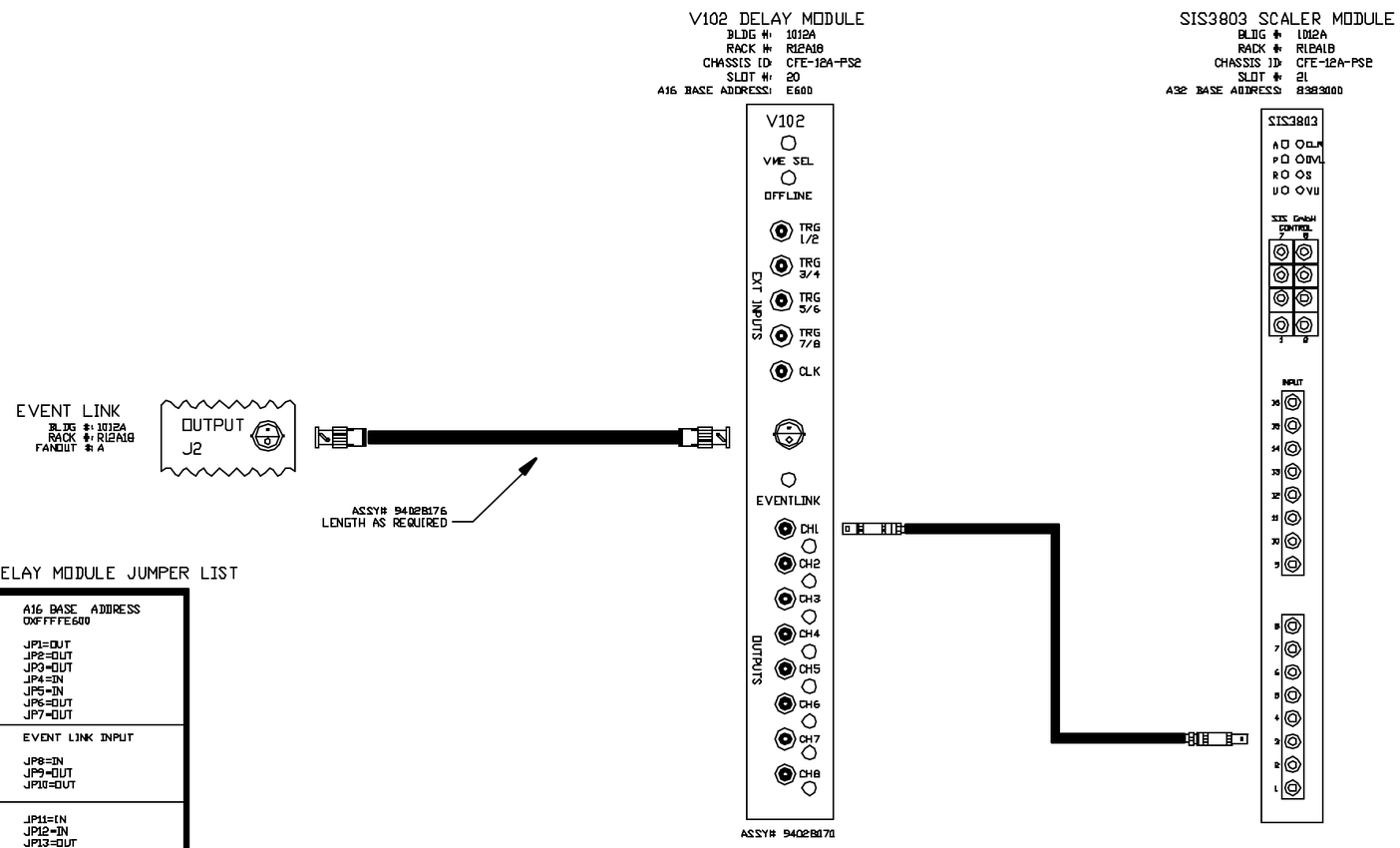

V102 DELAY MODULE JUMPER LIST

A16 BASE ADDRESS
0XFFFFE600

JP1=OUT
JP2=OUT
JP3=OUT
JP4=IN
JP5=IN
JP6=OUT
JP7=OUT

EVENT LINK INPUT

JP8=IN
JP9=OUT
JP10=OUT

JP11=IN
JP12=IN
JP13=OUT
JP14=IN

SIS3803 SCALER MODULE JUMPER LIST

A32 BASE ADDRESS
0X08383000

EN_A16=OUT
EN_A24=OUT
EN_A32=IN

J101-108=IN
J115=OUT
J500=IN
J120=IN

SV_A32U= D
SV_A32L= B
SV_A24U= 3
SV_A24L= B
SV_A16U= 3

J_A11=IN

REV.	ZONE	ECN NO.	DATE	BY	CKD	APP.

-3	-2	-1	REF DESIGNATION	ITEM NO.	DESCRIPTION	MFG. DWG NO./INS. NO.
QTY REQD						

INTERPRET IN GENERAL ACCORDANCE WITH ASME Y14.24M-1989

UNLESS OTHERWISE SPECIFIED DIMENSIONS ARE IN INCHES

DECIMAL TOLERANCES
.X ± .030
.XX ± .015
.XXX ± .005
ANGULAR TOLERANCE ± 5°

BREAK SHARP EDGES
MAX. XX MIN. XX

OUTSTANDING ECN: NA
RINGN

Q.A. CATEGORY A-3

		DATE
DRAWN BY	Ed Koropsak	8/28/98
CHECKED BY		
DESIGN APPROVAL		
ENGINEER APPROVAL	R. MICHNOFF	8/28/98
SUPVR APPROVAL		

NEXT ASSEMBLY

BROOKHAVEN NATIONAL LABORATORY
UPTON, N.Y. 11973

RHIC CONTROLS WIRING DIAGRAM
1012A, VME CHASSIS CFE-12A-PS2
V102 & SCALER MODULE

SIZE: D
94028579
DRAWING NUMBER
REV. A

MATERIAL: ——— SCALE: NA WEIGHT: – SHEET 29

*AUTOCAD

REV.	ZONE	ECN NO.	DATE	BY	CKR	APP.

Schoenfeld, Controls 11/20/2003 2:53 PM 8579_30.dwg

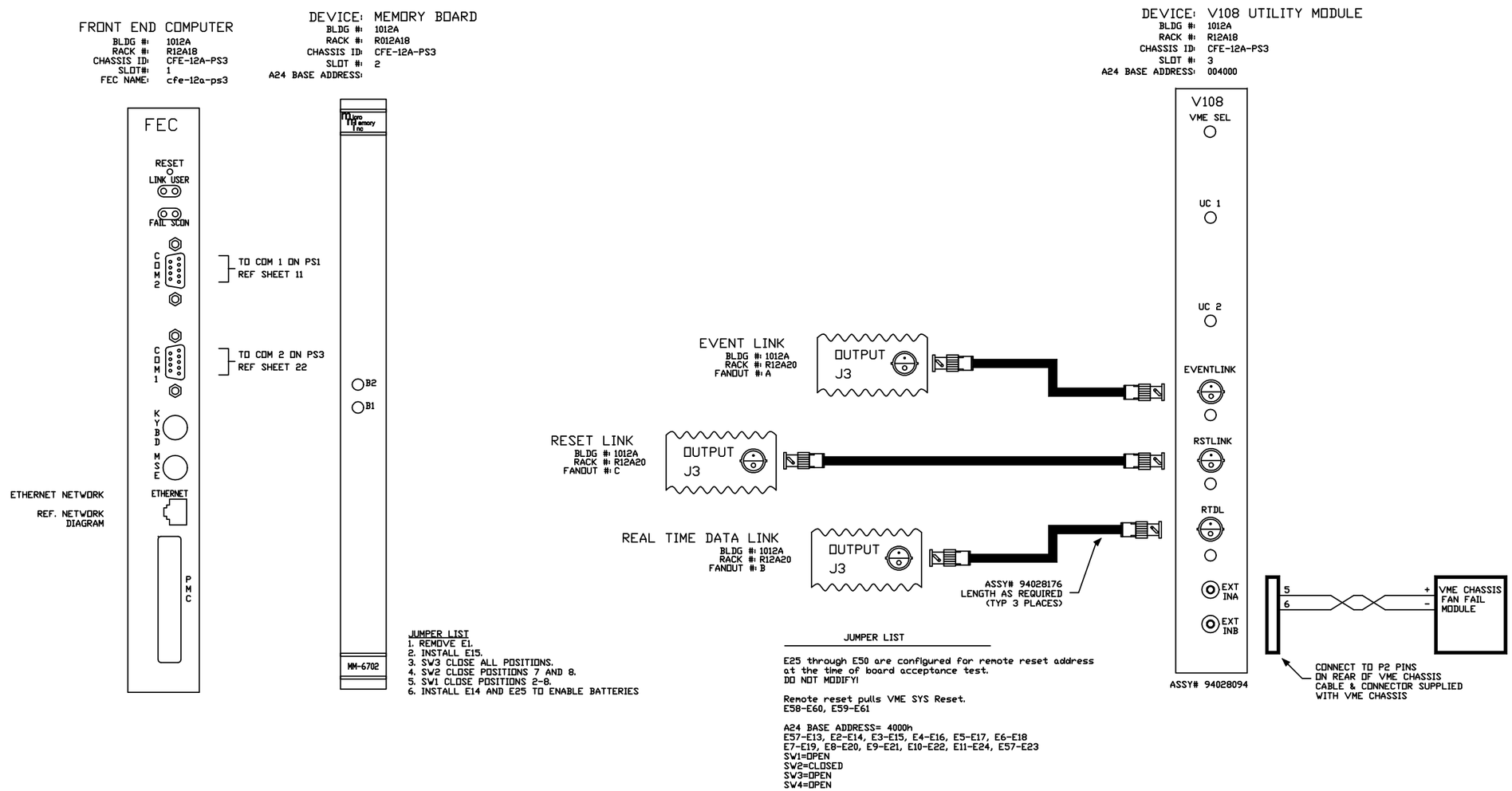

JUMPER LIST

E25 through E50 are configured for remote reset address at the time of board acceptance test.
DO NOT MODIFY!

Remote reset pulls VME SYS Reset.
E58-E60, E59-E61

A24 BASE ADDRESS= 4000h
E57-E13, E2-E14, E3-E15, E4-E16, E5-E17, E6-E18
E7-E19, E8-E20, E9-E21, E10-E22, E11-E24, E57-E23
SW1=OPEN
SW2=CLOSED
SW3=OPEN
SW4=OPEN

-3	-2	-1	REF DESIGNATOR	ITEM NO.	DESCRIPTION	MAT'L DWG NO.,SPEC NO.
QTY REQD						

INTERPRET IN GENERAL ACCORDANCE WITH ASME Y14.24M-1989	Q.A. CATEGORY A-3	DATE	BROOKHAVEN NATIONAL LABORATORY UPTON, N.Y. 11973
	DRAWN BY Ed Koropsak	6/26/98	
UNLESS OTHERWISE SPECIFIED DIMENSIONS ARE IN INCHES	CHECKED BY		RHIC CONTROLS WIRING DIAGRAM
DECIMAL TOLERANCES .X ±.030 .XX ±.015 .XXX ±.005 ANGULAR TOLERANCE ± .5°	DESIGN APPROVAL		1012A, VME CHASSIS CFE-12A-PS3
	ENGINEER APPROVAL R. MICHNOFF	6/26/98	FT END COMP/V108 UTIL MODULE
	SUPVR. APPROVAL		SIZE D — DRAWING NUMBER 94028579 — REV. A
NA FINISH — BREAK SHARP EDGES MAX. XX MIN. XX	NEXT ASSEMBLY		
OUTSTANDING ECN			MATERIAL: — SCALE: FULL WEIGHT: – SHEET 30

*AUTOCAD

REV.	ZONE	ECN NO.	DATE	BY	CKR	APP.

Schoenfeld, Controls 11/20/2003 2:09 PM 8579_31.dwg

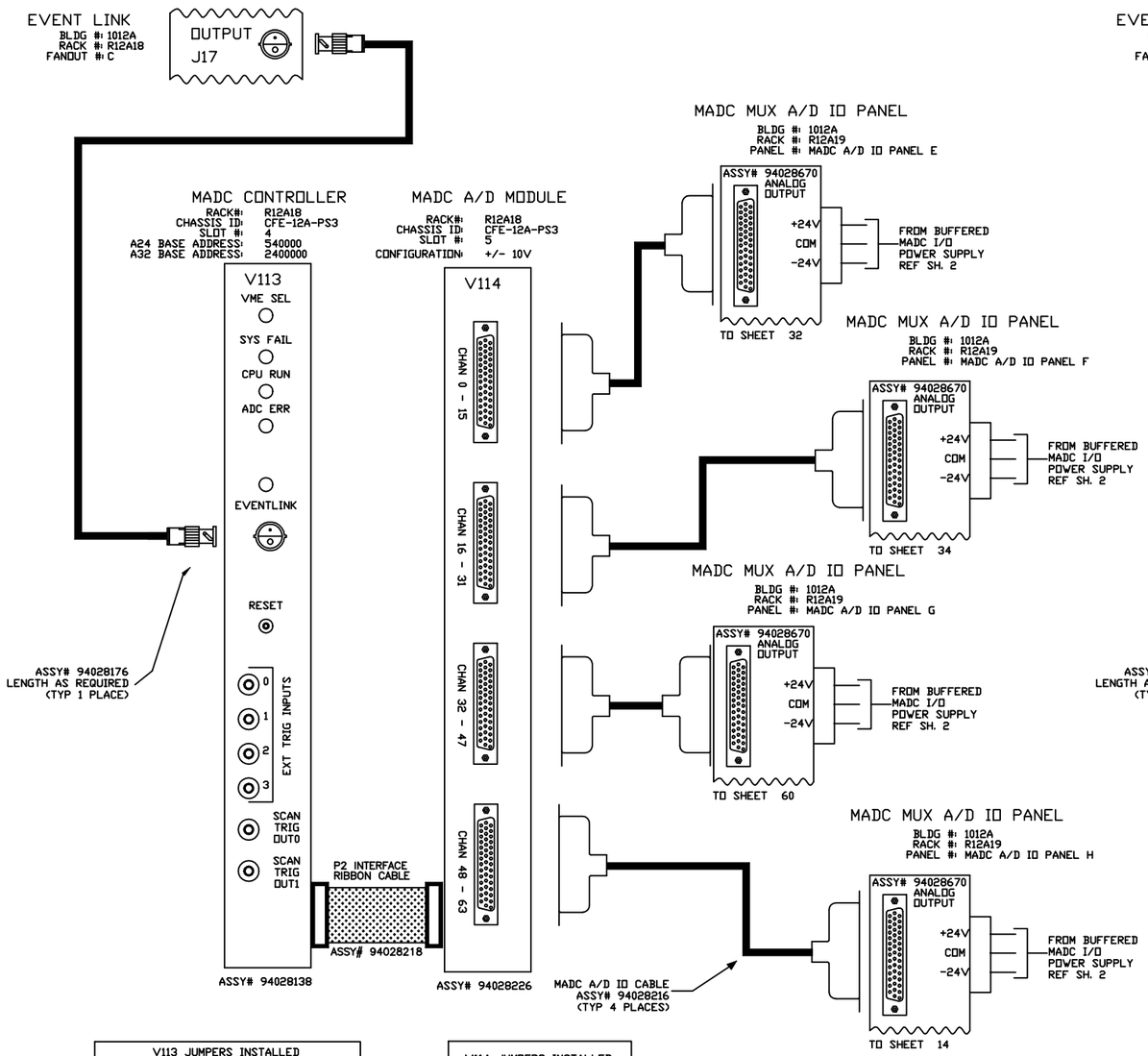

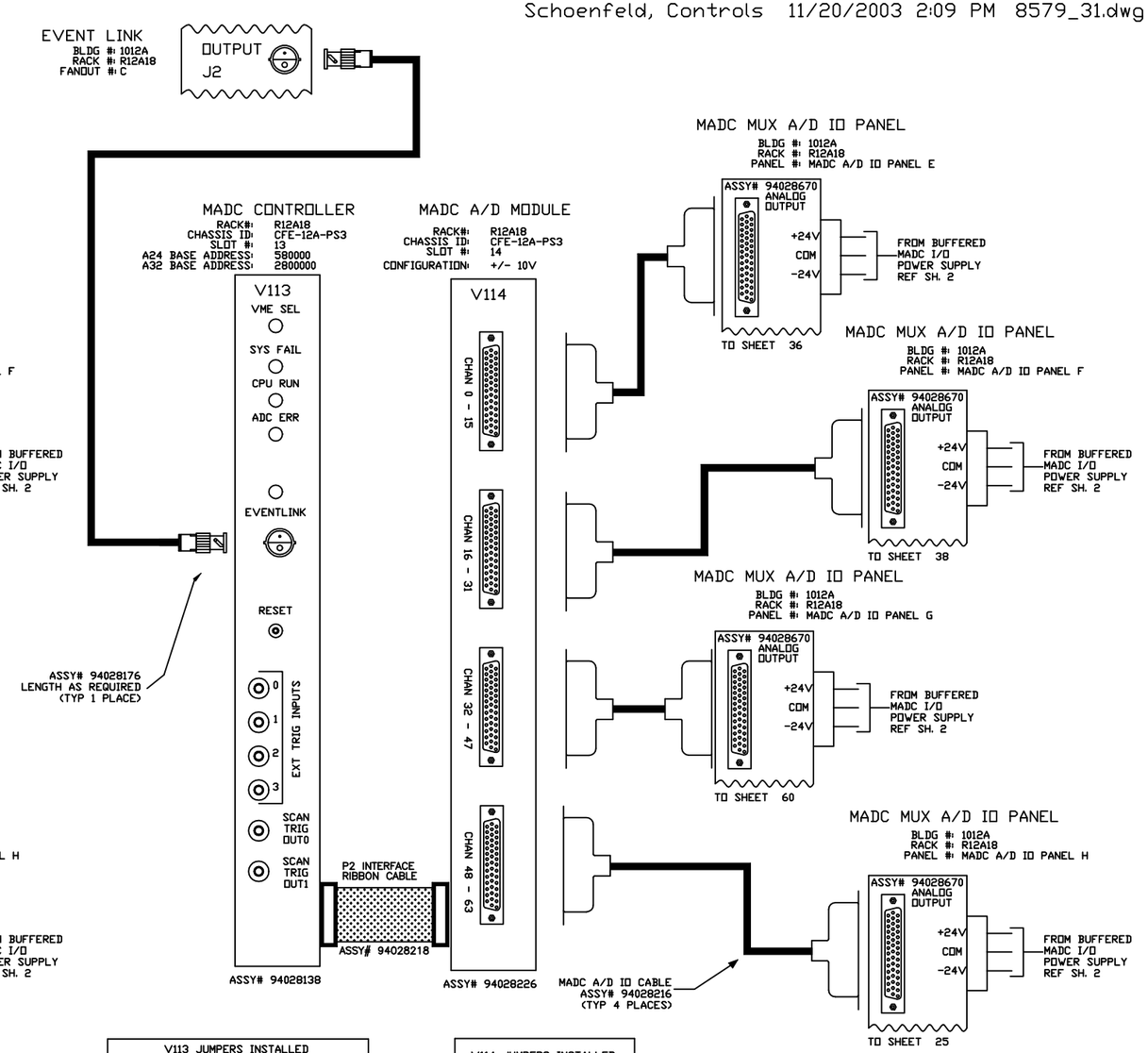

V113 JUMPERS INSTALLED

E3-E4

V113
BASE ADDRESS DIP SWITCHES

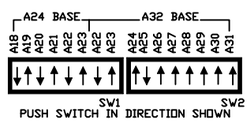

PUSH SWITCH IN DIRECTION SHOWN

V114 JUMPERS INSTALLED

J1, J2, J4, J5, J9
J19, J15, J21

ALL OTHER JUMPERS OUT

V113 JUMPERS INSTALLED

E3-E4

V113
BASE ADDRESS DIP SWITCHES

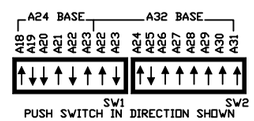

PUSH SWITCH IN DIRECTION SHOWN

V114 JUMPERS INSTALLED

J1, J2, J4, J5, J9
J19, J15, J21

ALL OTHER JUMPERS OUT

-3	-2	-1	REF DESIGNATOR	ITEM NO.	DESCRIPTION	MAT'L. DWG NO.,SPEC. NO.
QTY REQD						

INTERPRET IN GENERAL ACCORDANCE WITH ASME Y14.24M-1989

UNLESS OTHERWISE SPECIFIED DIMENSIONS ARE IN INCHES

DECIMAL TOLERANCES
.X ±.030
.XX ±.015
.XXX ±.005
ANGULAR TOLERANCE
± .5°

NA FINISH

BREAK SHARP EDGES
MAX. XX MIN. XX

OUTSTANDING ECN

Q.A. CATEGORY A-3		DATE
DRAWN BY	Ed Koropsak	6/26/98
CHECKED BY		
DESIGN APPROVAL		
ENGINEER APPROVAL	R. MICHNOFF	6/26/98
SUPVR. APPROVAL		

NEXT ASSEMBLY

BROOKHAVEN NATIONAL LABORATORY
UPTON, N.Y. 11973

RHIC CONTROLS WIRING DIAGRAM
1012A, VME CHASSIS CFE-12A-PS3
MADC SYSTEM

SIZE D | DRAWING NUMBER 94028579 | REV. A

MATERIAL: — | SCALE: NA | WEIGHT: — | SHEET 31

*AUTOCAD

Schoenfeld, Controls 11/20/2003 2:06 PM 8579_32.dwg

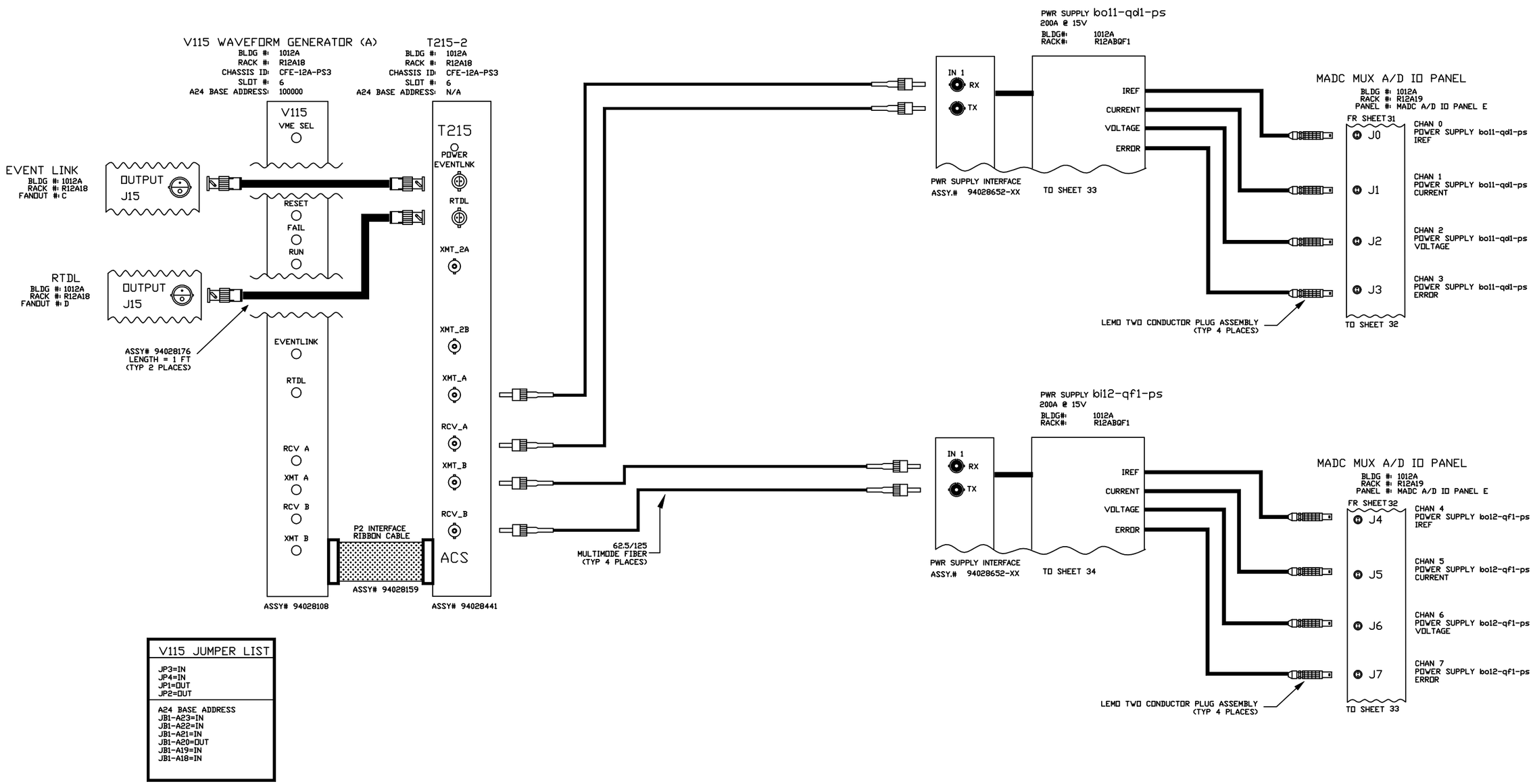

V115 JUMPER LIST
JP3=IN JP4=IN JP1=OUT JP2=OUT
A24 BASE ADDRESS JB1-A23=IN JB1-A22=IN JB1-A21=IN JB1-A20=OUT JB1-A19=IN JB1-A18=IN

-3	-2	-1	REF DESIGNATOR	ITEM NO.	DESCRIPTION	MAT'L. DWG NO.,BNL NO.
QTY REQD						

INTERPRET IN GENERAL ACCORDANCE WITH ASME Y14.24M-1989

UNLESS OTHERWISE SPECIFIED DIMENSIONS ARE IN INCHES

DECIMAL TOLERANCES
.X ±.030
.XX ±.015
.XXX ±.005
ANGULAR TOLERANCE ± .5°

NA FINISH — BREAK SHARP EDGES — MAX. XX MIN. XX

OUTSTANDING ECN

Q.A. CATEGORY A-3

		DATE
DRAWN BY	Ed Koropsak	6/26/98
CHECKED BY		
DESIGN APPROVAL		
ENGINEER APPROVAL	R.MICHNOFF	6/26/98
SUPVR. APPROVAL		

NEXT ASSEMBLY

BROOKHAVEN NATIONAL LABORATORY
UPTON, N.Y. 11973

RHIC CONTROLS WIRING DIAGRAM

1012A, VME CHASSIS CFE-12A-PS3

bo11-qd1-ps/bo12-qf1-ps

SIZE D — DRAWING NUMBER 94028579 — REV. A

MATERIAL: ——— SCALE: NA WEIGHT: – SHEET 32

*AUTOCAD

Schoenfeld, Controls 11/20/2003 2:04 PM 8579_33.dwg

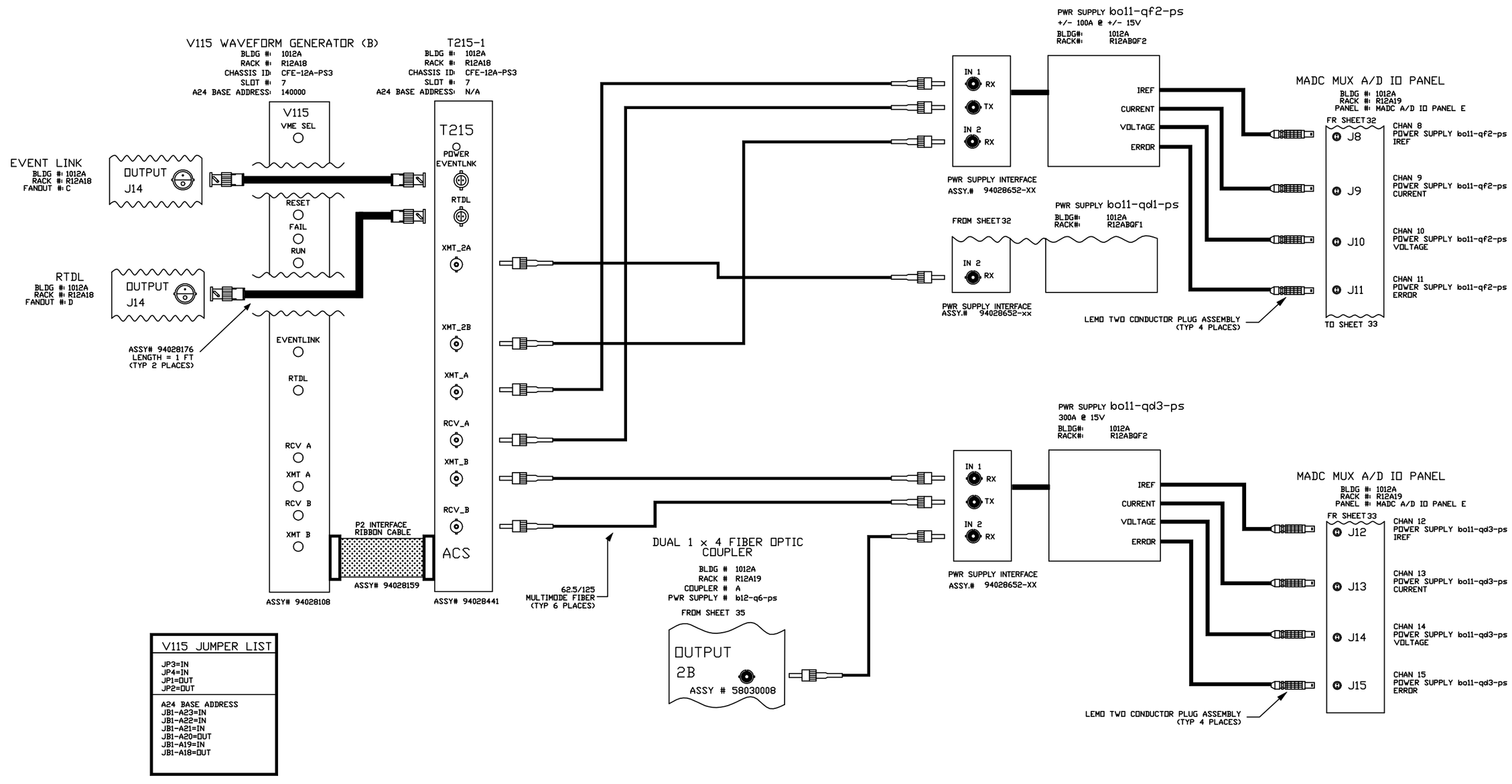

V115 JUMPER LIST
JP3=IN JP4=IN JP1=OUT JP2=OUT
A24 BASE ADDRESS JB1-A23=IN JB1-A22=IN JB1-A21=IN JB1-A20=OUT JB1-A19=IN JB1-A18=OUT

REV.	ZONE	ECN NO.	DATE	BY	CKR	APP.

-3	-2	-1	REF DESIGNATOR	ITEM NO.	DESCRIPTION	MAT'L. DWG NO./JAN. NO.
QTY REQD						

INTERPRET IN GENERAL ACCORDANCE WITH ASME Y14.24M-1989

UNLESS OTHERWISE SPECIFIED DIMENSIONS ARE IN INCHES
DECIMAL TOLERANCES
.X ±.030
.XX ±.015
.XXX ±.005
ANGULAR TOLERANCE
± .5°

NA FINISH — BREAK SHARP EDGES MAX. XX MIN. XX

OUTSTANDING ECN

Q.A. CATEGORY A-3		DATE
DRAWN BY	Ed Koropsak	6/26/98
CHECKED BY		
DESIGN APPROVAL		
ENGINEER APPROVAL	R.MICHNOFF	6/26/98
SUPVR. APPROVAL		
NEXT ASSEMBLY		

BROOKHAVEN NATIONAL LABORATORY
UPTON, N.Y. 11973

RHIC CONTROLS WIRING DIAGRAM
1012A, VME CHASSIS CFE-12A-PS3
bo11-qf2-ps/bo11-qd3-ps

SIZE D — DRAWING NUMBER 94028579 — REV. A

MATERIAL: ——— SCALE: NA WEIGHT: – SHEET 33

1 *AUTOCAD

Schoenfeld, Controls 11/20/2003 1:59 PM 8579_34.dwg

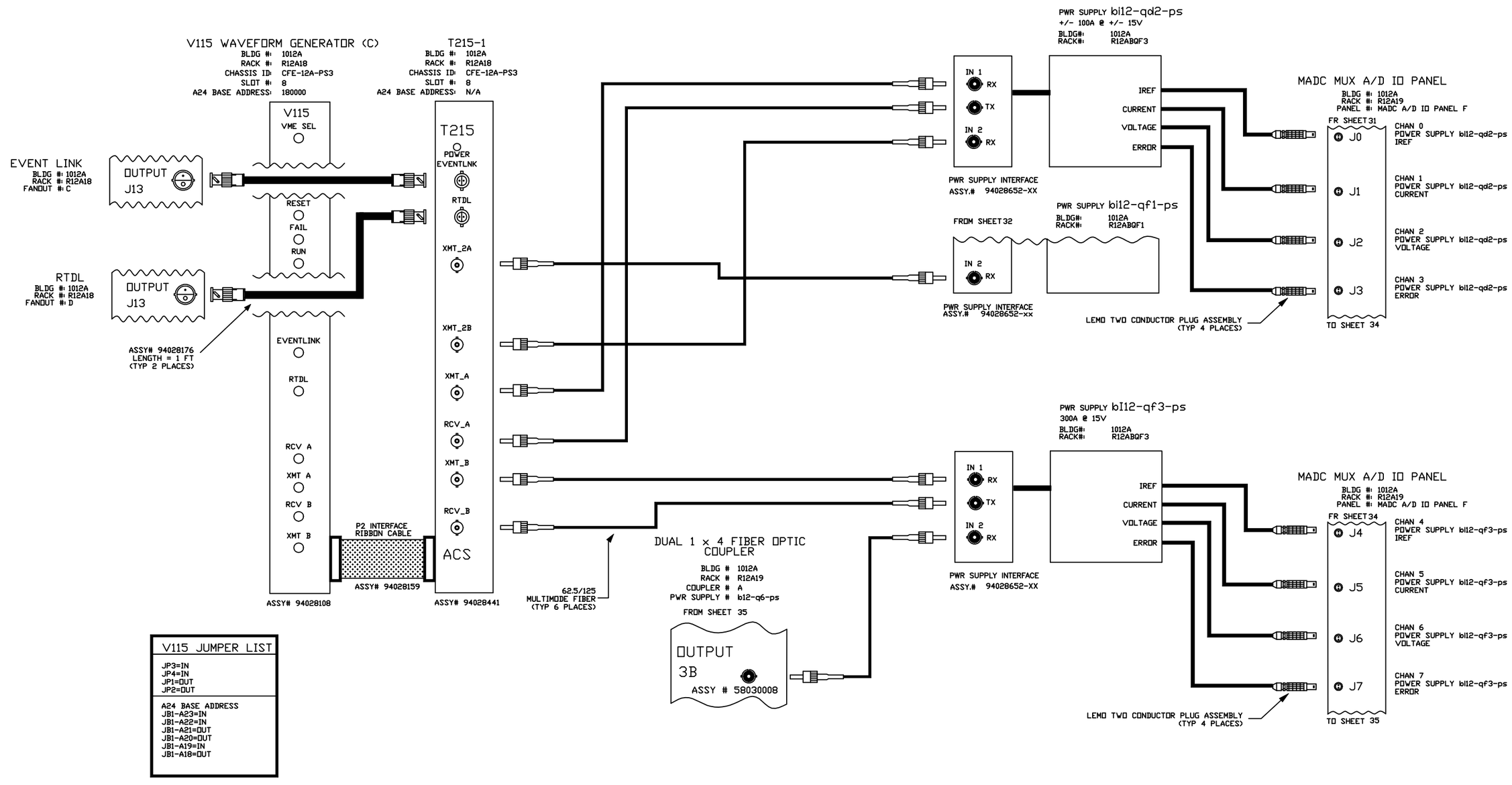

V115 JUMPER LIST
JP3=IN JP4=IN JP1=OUT JP2=OUT
A24 BASE ADDRESS JB1-A23=IN JB1-A22=IN JB1-A21=OUT JB1-A20=OUT JB1-A19=IN JB1-A18=OUT

REV.	ZONE	ECN NO.	DATE	BY	CKR	APP.

-3	-2	-1	REF DESIGNATOR	ITEM NO.	DESCRIPTION	MAT'L. DWG NO./JAN. NO.
QTY REQD						

INTERPRET IN GENERAL ACCORDANCE WITH ASME Y14.24M-1989

UNLESS OTHERWISE SPECIFIED DIMENSIONS ARE IN INCHES

DECIMAL TOLERANCES
.X ±.030
.XX ±.015
.XXX ±.005
ANGULAR TOLERANCE ± .5°

NA FINISH

BREAK SHARP EDGES
MAX. XX MIN. XX

OUTSTANDING ECN

Q.A. CATEGORY A-3		DATE
DRAWN BY	Ed Koropsak	6/26/98
CHECKED BY		
DESIGN APPROVAL		
ENGINEER APPROVAL	R.MICHNOFF	6/26/98
SUPVR. APPROVAL		

NEXT ASSEMBLY

BROOKHAVEN NATIONAL LABORATORY
UPTON, N.Y. 11973

RHIC CONTROLS WIRING DIAGRAM

1012A, VME CHASSIS CFE-12A-PS3

bo11-qd2-ps/bo11-qf3-ps

SIZE D — DRAWING NUMBER 94028579 — REV. A

MATERIAL: ——— SCALE: NA WEIGHT: – SHEET 34

*AUTOCAD

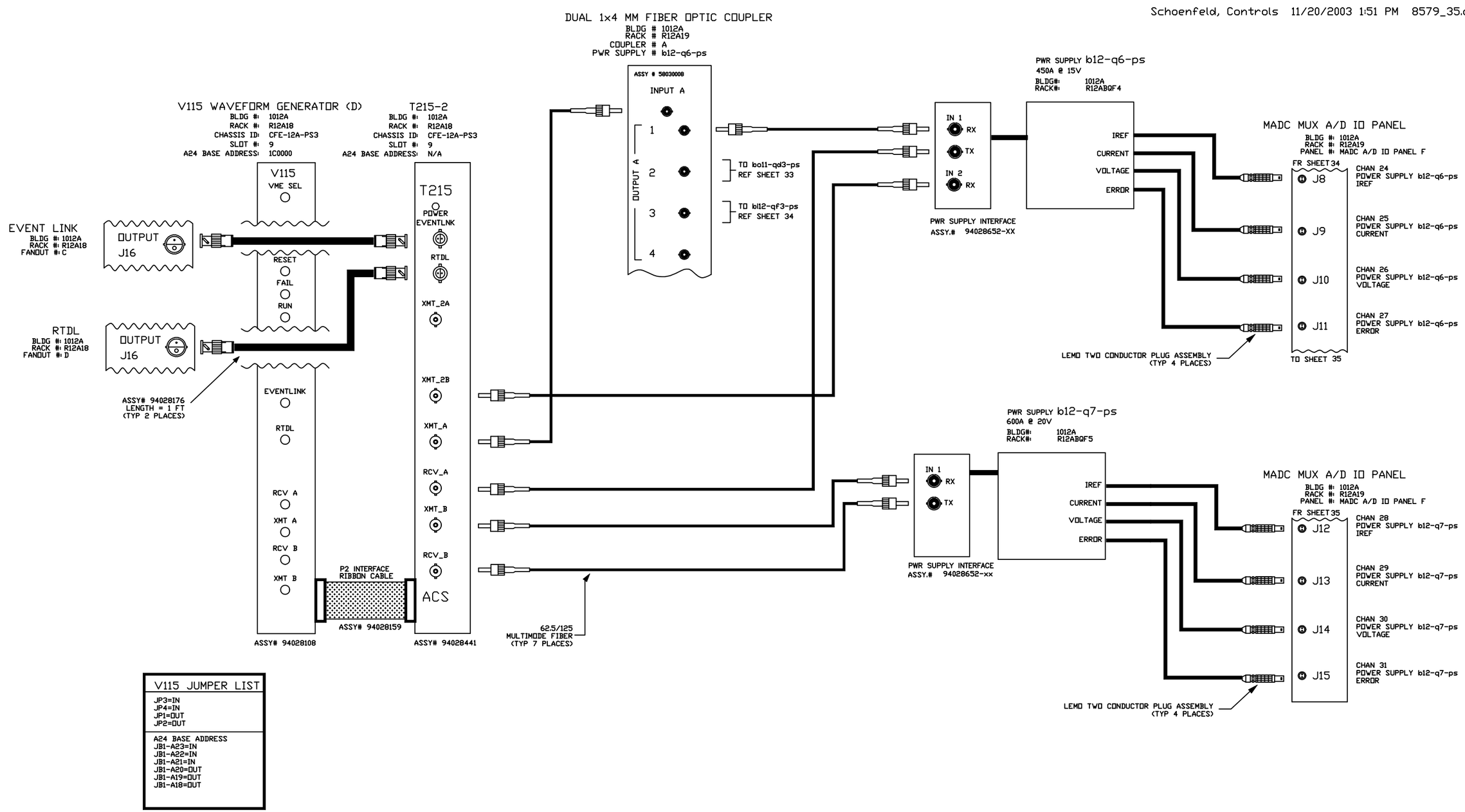

V115 JUMPER LIST
JP3=IN JP4=IN JP1=OUT JP2=OUT
A24 BASE ADDRESS JB1-A23=IN JB1-A22=IN JB1-A21=IN JB1-A20=OUT JB1-A19=OUT JB1-A18=OUT

REV.	ZONE	ECN NO.	DATE	BY	CKR	APP.

-3	-2	-1	REF DESIGNATOR	ITEM NO.	DESCRIPTION	MAT'L. DWG NO.,SPEC. NO.
QTY REQD						

INTERPRET IN GENERAL ACCORDANCE WITH ASME Y14.24M-1989

UNLESS OTHERWISE SPECIFIED DIMENSIONS ARE IN INCHES

DECIMAL TOLERANCES
.X ±.030
.XX ±.015
.XXX ±.005
ANGULAR TOLERANCE
± .5°

FINISH: NA

BREAK SHARP EDGES
MAX. XX MIN. XX

OUTSTANDING ECN

Q.A. CATEGORY A-3		DATE
DRAWN BY	Ed Koropsak	6/26/98
CHECKED BY		
DESIGN APPROVAL		
ENGINEER APPROVAL	R.MICHNOFF	6/26/98
SUPVR. APPROVAL		
NEXT ASSEMBLY		

BROOKHAVEN NATIONAL LABORATORY
UPTON, N.Y. 11973

RHIC CONTROLS WIRING DIAGRAM

1012A, VME CHASSIS CFE-12A-PS3

b12-q6-ps/b12-q7-ps

SIZE D | DRAWING NUMBER 94028579 | REV. A

MATERIAL: ——— | SCALE: NA | WEIGHT: – | SHEET 35

*AUTOCAD

REV.	ZONE	ECN NO.	DATE	BY	CKR	APP.

Schoenfeld, Controls 11/20/2003 1:49 PM 8579_36.dwg

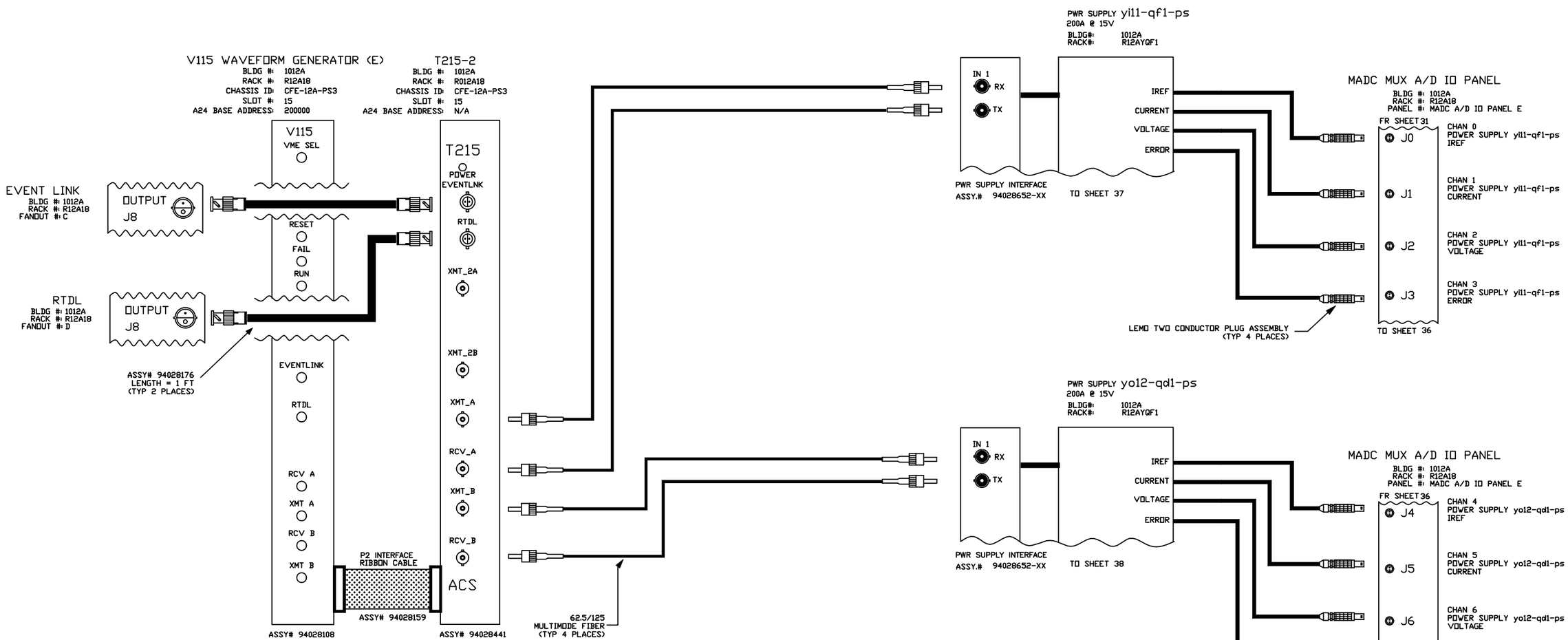

V115 JUMPER LIST
JP3=IN JP4=IN JP1=OUT JP2=OUT
A24 BASE ADDRESS JB1-A23=IN JB1-A22=IN JB1-A21=OUT JB1-A20=IN JB1-A19=IN JB1-A18=IN

-3	-2	-1	REF DESIGNATOR	ITEM NO.	DESCRIPTION	MAT'L DWG NO./INL NO.
QTY REQD						

INTERPRET IN GENERAL ACCORDANCE WITH ASME Y14.24M-1989

UNLESS OTHERWISE SPECIFIED DIMENSIONS ARE IN INCHES

DECIMAL TOLERANCES
.X ±.030
.XX ±.015
.XXX ±.005
ANGULAR TOLERANCE
± .5°

NA FINISH

BREAK SHARP EDGES
MAX. XX MIN. XX

OUTSTANDING ECN

Q.A. CATEGORY A-3		DATE
DRAWN BY	Ed Koropsak	6/29/98
CHECKED BY		
DESIGN APPROVAL		
ENGINEER APPROVAL	R.MICHNOFF	6/29/98
SUPVR. APPROVAL		

NEXT ASSEMBLY

BROOKHAVEN NATIONAL LABORATORY
UPTON, N.Y. 11973

RHIC CONTROLS WIRING DIAGRAM

1012A, VME CHASSIS CFE-12A-PS3

yi11-qf1-ps/yo12-qd1-ps

SIZE D | 94028579 | REV. A

DRAWING NUMBER

MATERIAL: ——— SCALE: NA WEIGHT: – SHEET 36

1 *AUTOCAD

Schoenfeld, Controls 11/20/2003 1:48 PM 8579_37.dwg

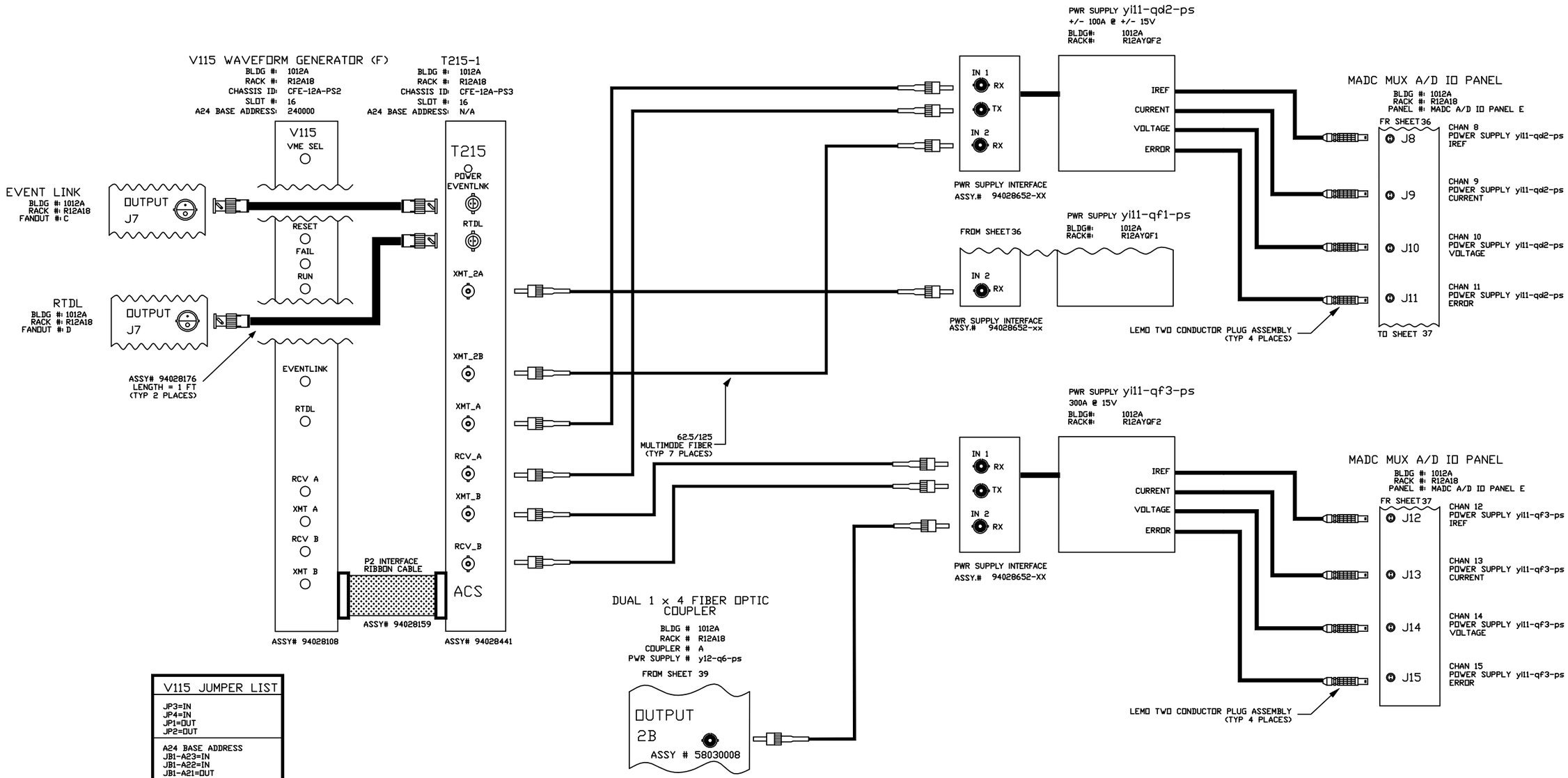

V115 JUMPER LIST
JP3=IN JP4=IN JP1=OUT JP2=OUT
A24 BASE ADDRESS JB1-A23=IN JB1-A22=IN JB1-A21=OUT JB1-A20=IN JB1-A19=IN JB1-A18=OUT

-3	-2	-1	REF DESIGNATOR	ITEM NO.	DESCRIPTION	MAT'L DWG NO./BNL NO.
QTY REQD						

INTERPRET IN GENERAL ACCORDANCE WITH ASME Y14.24M-1989

UNLESS OTHERWISE SPECIFIED DIMENSIONS ARE IN INCHES

DECIMAL TOLERANCES
.X ±.030
.XX ±.015
.XXX ±.005
ANGULAR TOLERANCE
± .5°

NA FINISH

BREAK SHARP EDGES
MAX. XX MIN. XX

OUTSTANDING ECN

Q.A. CATEGORY A-3		DATE
DRAWN BY	Ed Koropsak	6/29/98
CHECKED BY		
DESIGN APPROVAL		
ENGINEER APPROVAL	R.MICHNOFF	6/29/98
SUPVR. APPROVAL		

NEXT ASSEMBLY

BROOKHAVEN NATIONAL LABORATORY
UPTON, N.Y. 11973

RHIC CONTROLS WIRING DIAGRAM
1012A, VME CHASSIS CFE-12A-PS3
yi11-qd2-ps/yi11-qf3-ps

SIZE D | DRAWING NUMBER 94028579 | REV. A

MATERIAL: ——— SCALE: NA WEIGHT: – SHEET 37

*AUTOCAD

Schoenfeld, Controls 11/20/2003 1:45 PM 8579_38.dwg

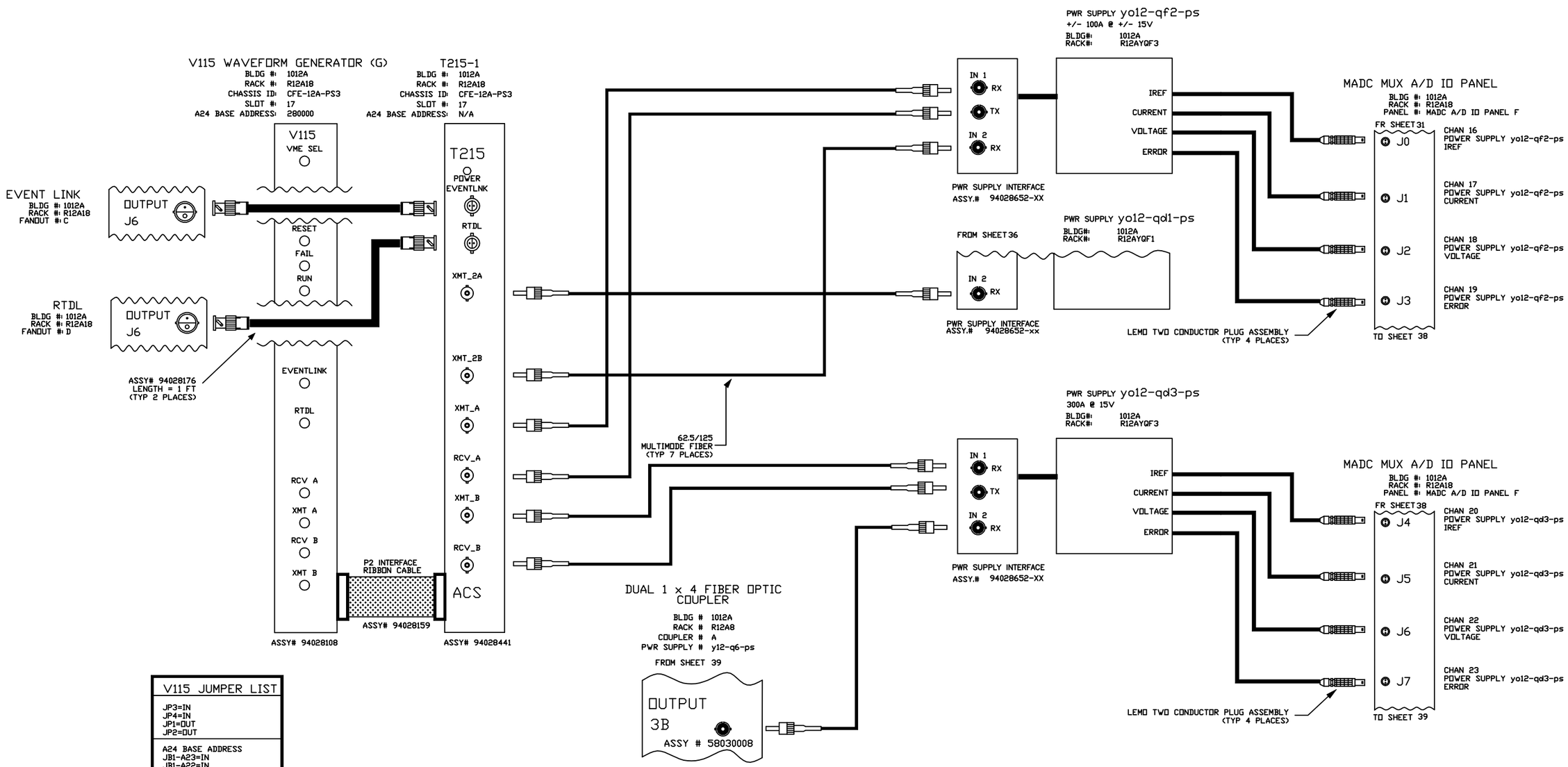

V115 JUMPER LIST
JP3=IN JP4=IN JP1=OUT JP2=OUT
A24 BASE ADDRESS JB1-A23=IN JB1-A22=IN JB1-A21=OUT JB1-A20=IN JB1-A19=OUT JB1-A18=IN

REV.	ZONE	ECN NO.	DATE	BY	CKR	APP.

-3	-2	-1	REF DESIGNATOR	ITEM NO.	DESCRIPTION	MAT'L DWG NO./BNL NO.
QTY REQD						

INTERPRET IN GENERAL ACCORDANCE WITH ASME Y14.24M-1989

UNLESS OTHERWISE SPECIFIED DIMENSIONS ARE IN INCHES

DECIMAL TOLERANCES
.X ±.030
.XX ±.015
.XXX ±.005
ANGULAR TOLERANCE
± .5°

NA FINISH

BREAK SHARP EDGES
MAX. XX MIN. XX

OUTSTANDING ECN

Q.A. CATEGORY A-3		DATE
DRAWN BY	Ed Koropsak	6/29/98
CHECKED BY		
DESIGN APPROVAL		
ENGINEER APPROVAL	R.MICHNOFF	6/29/98
SUPVR. APPROVAL		

NEXT ASSEMBLY

BROOKHAVEN NATIONAL LABORATORY
UPTON, N.Y. 11973

RHIC CONTROLS WIRING DIAGRAM

1012A, VME CHASSIS CFE-12A-PS3

yo12-qf2-ps/yo12-qd3-ps

SIZE D | 94028579 | REV. A

DRAWING NUMBER

MATERIAL: ——— SCALE: NA WEIGHT: – SHEET 38

1 *AUTOCAD

Schoenfeld, Controls 11/6/2003 11:19 AM 8579_35.dwg

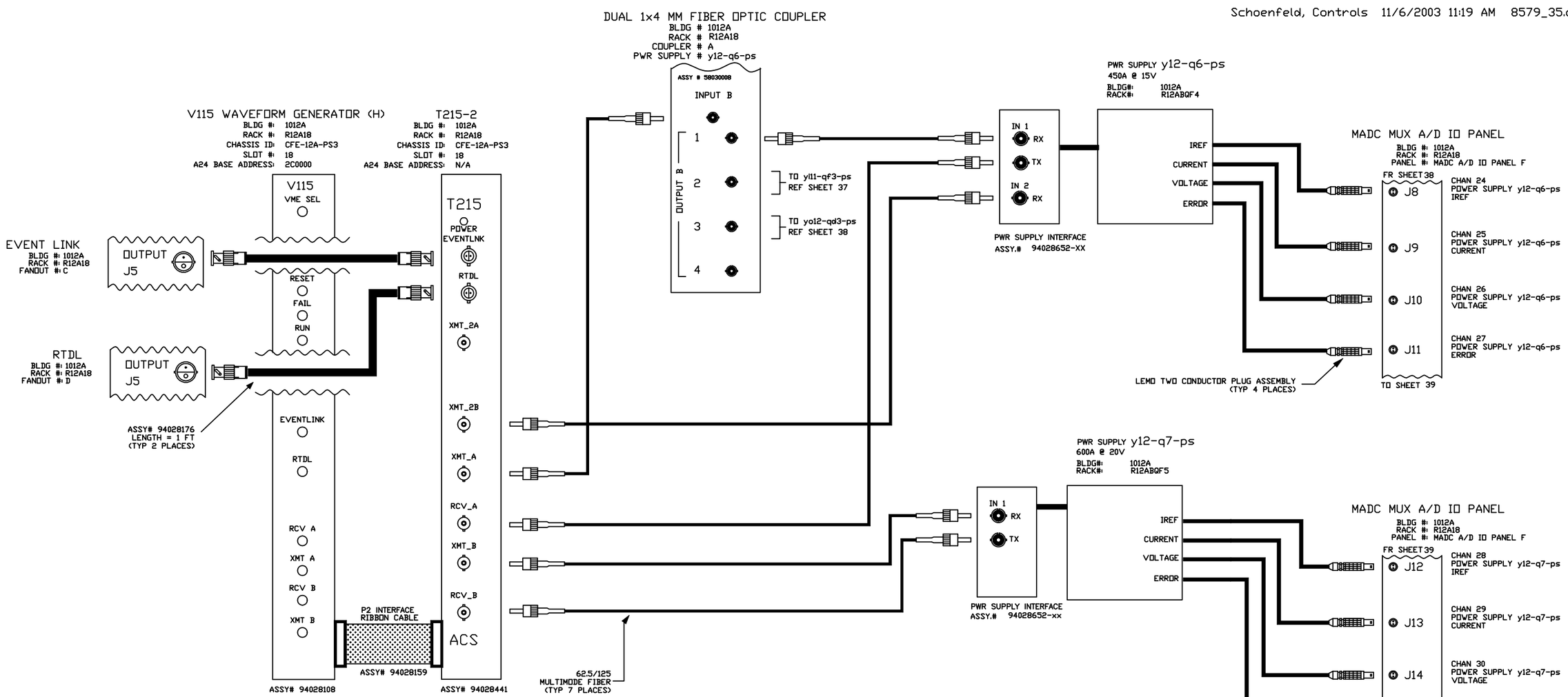

V115 JUMPER LIST
JP3=IN JP4=IN JP1=OUT JP2=OUT
A24 BASE ADDRESS JB1-A23=IN JB1-A22=IN JB1-A21=OUT JB1-A20=IN JB1-A19=OUT JB1-A18=OUT

REV.	ZONE	ECN NO.	DATE	BY	CKR	APP.

-3	-2	-1	REF DESIGNATOR	ITEM NO.	DESCRIPTION	MAT'L. DWG NO.,SPEC. NO.
QTY REQD						

INTERPRET IN GENERAL ACCORDANCE WITH ASME Y14.24M-1989

UNLESS OTHERWISE SPECIFIED DIMENSIONS ARE IN INCHES

DECIMAL TOLERANCES .X ±.030 .XX ±.015 .XXX ±.005 ANGULAR TOLERANCE ± .5°

FINISH: NA BREAK SHARP EDGES MAX. XX MIN. XX

OUTSTANDING ECN

Q.A. CATEGORY A-3		DATE
DRAWN BY	Ed Koropsak	6/26/98
CHECKED BY		
DESIGN APPROVAL		
ENGINEER APPROVAL	R.MICHNOFF	6/26/98
SUPVR. APPROVAL		

NEXT ASSEMBLY

BROOKHAVEN NATIONAL LABORATORY
UPTON, N.Y. 11973

RHIC CONTROLS WIRING DIAGRAM

1012A, VME CHASSIS CFE-12A-PS3

y12-q6-ps/y12-q7-ps

SIZE D — DRAWING NUMBER 94028579 — REV. A

MATERIAL: ——— SCALE: NA WEIGHT: – SHEET 39

*AUTOCAD

REV.	ZONE	ECN NO.	DATE	BY	CKR	APP.

Schoenfeld, Controls 11/20/2003 1:34 PM 8579_40.dwg

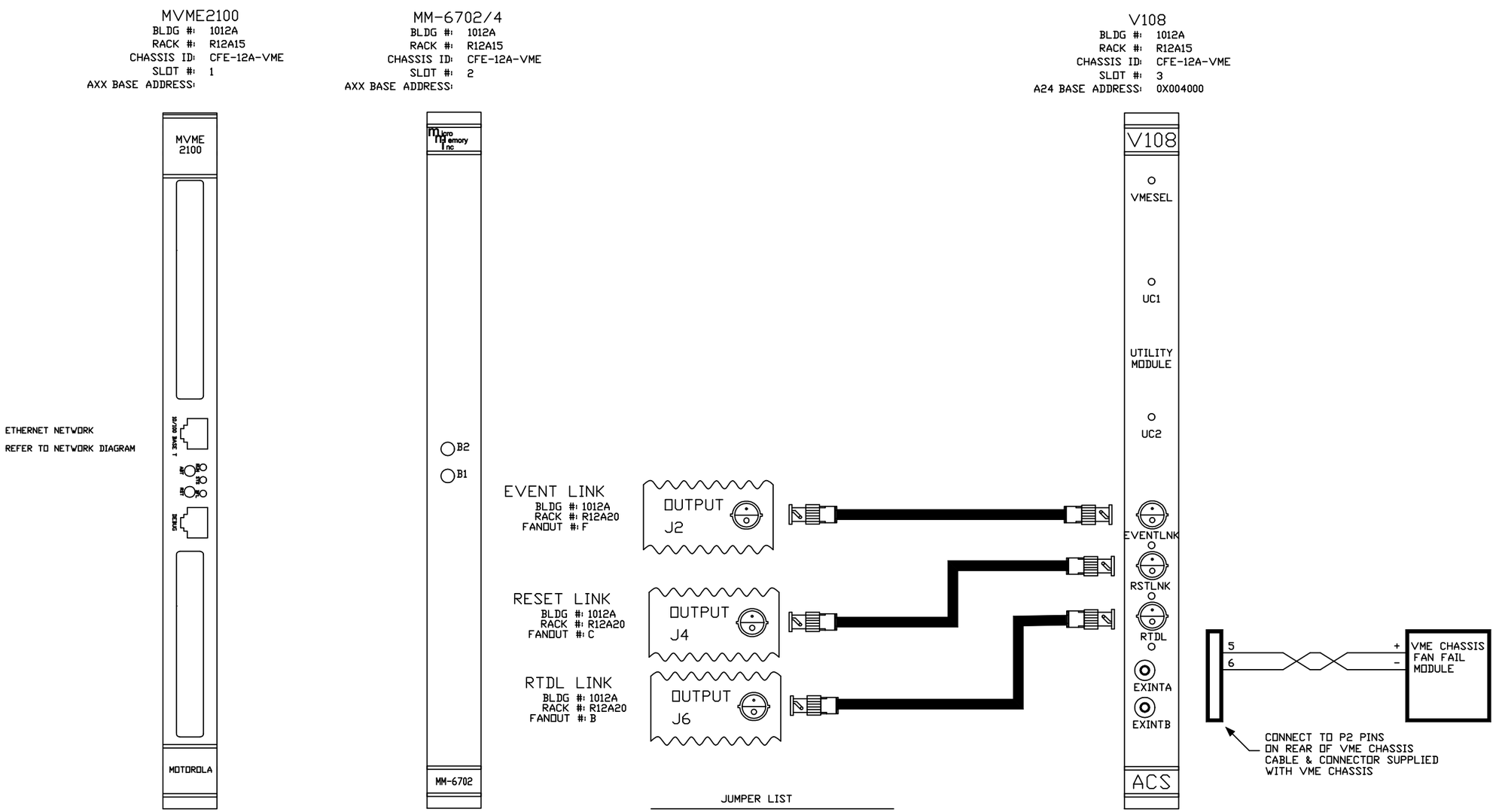

JUMPER LIST

E25 through E50 are configured for remote reset address at the time of board acceptance test.
DO NOT MODIFY!

Remote reset pulls VME SYS Reset.
E58-E60, E59-E61

A24 BASE ADDRESS= 4000h
E57-E13, E2-E14, E3-E15, E4-E16, E5-E17, E6-E18
E7-E19, E8-E20, E9-E21, E10-E22, E11-E24, E57-E23
SW1=OPEN
SW2=CLOSED
SW3=OPEN

-3	-2	-1	REF DESIGNATOR	ITEM NO.	DESCRIPTION	MAT'L DWG NO.,SHL NO.
QTY REQD						

INTERPRET IN GENERAL ACCORDANCE WITH ASME Y14.24M-1989

UNLESS OTHERWISE SPECIFIED DIMENSIONS ARE IN INCHES

DECIMAL TOLERANCES
.X ±.030
.XX ±.015
.XXX ±.005
ANGULAR TOLERANCE
± .5°

NA FINISH

BREAK SHARP EDGES
MAX. XX MIN. XX

OUTSTANDING ECN

NEXT ASSEMBLY

Q.A. CATEGORY A-3		DATE
DRAWN BY	Ralph Schoenfeld	11/5/03
CHECKED BY		
DESIGN APPROVAL		
ENGINEER APPROVAL		
SUPVR. APPROVAL		

BROOKHAVEN NATIONAL LABORATORY
UPTON, N.Y. 11973

RHIC CONTROLS WIRING DIAGRAM
1012A, VME CHASSIS CFE-12A-VME
FT END COMP/V108 UTIL MODULE

SIZE D | DRAWING NUMBER 94028579 | REV. A

MATERIAL: ——— SCALE: FULL WEIGHT: – SHEET 40

*AUTOCAD

REV.	ZONE	ECN NO.	DATE	BY	CKR	APP.

Schoenfeld, Controls 11/20/2003 1:33 PM 8579_41.dwg

VMIC 1160A-201D
BLDG #: 1012A
RACK #: R12A15
CHASSIS ID: CFE-12A-VME
SLOT #: 4
A16 BASE ADDRESS: 0XE000

VMIVME 1160A

P3

VMIC VMEbus

64 Pin male to male ribbon cable.

VMIACC BT01
BLDG #: 1012A
RACK #: R12A15
CHASSIS ID: N/A
SLOT #:
BASE ADDRESS:

1/2 VMIACC BT01

C1 A1

NOT ASSIGNED / NOT ASSIGNED
NOT ASSIGNED / NOT ASSIGNED
NOT ASSIGNED / NOT ASSIGNED
NOT ASSIGNED / NOT ASSIGNED
NOT ASSIGNED / NOT ASSIGNED
NOT ASSIGNED / NOT ASSIGNED
NOT ASSIGNED / NOT ASSIGNED
NOT ASSIGNED / NOT ASSIGNED
NOT ASSIGNED / NOT ASSIGNED
NOT ASSIGNED / NOT ASSIGNED
NOT ASSIGNED / NOT ASSIGNED
NOT ASSIGNED / NOT ASSIGNED
NOT ASSIGNED / NOT ASSIGNED
NOT ASSIGNED / NOT ASSIGNED
NOT ASSIGNED / NOT ASSIGNED
NOT ASSIGNED / NOT ASSIGNED
NOT ASSIGNED / NOT ASSIGNED
NOT ASSIGNED / NOT ASSIGNED
NOT ASSIGNED / NOT ASSIGNED
NOT ASSIGNED / NOT ASSIGNED
NOT ASSIGNED / NOT ASSIGNED
NOT ASSIGNED / NOT ASSIGNED
NOT ASSIGNED / NOT ASSIGNED
NOT ASSIGNED / NOT ASSIGNED
NOT ASSIGNED / NOT ASSIGNED
NOT ASSIGNED / NOT ASSIGNED
NOT ASSIGNED / NOT ASSIGNED
NOT ASSIGNED / NOT ASSIGNED
NOT ASSIGNED / NOT ASSIGNED
NOT ASSIGNED / NOT ASSIGNED

C32 A32

The following jumpers are installed:
J1, J3, J5, J7, J9, J11, J13, J15, J17, J19, J21, J23, J25,
J27, J29, J31, J33, J35, J37, J39, J41, J43, J45, J47,
J49, J51, J53, J55, J57, J59, J61, J63

U35
SW 1-3 OFF
SW 4-8 ON

U34
SW 1-8 ON

J65= open SHORT SUPERVISORY I/O access

-3	-2	-1	REF DESIGNATOR	ITEM NO.	DESCRIPTION	MAT'L. DWG NO.,SPEC. NO.
QTY REQD						

INTERPRET IN GENERAL ACCORDANCE WITH ASME Y14.24M-1989
UNLESS OTHERWISE SPECIFIED DIMENSIONS ARE IN INCHES
DECIMAL TOLERANCES .X ±.030 .XX ±.015 .XXX ±.005
ANGULAR TOLERANCE ± .5°
NA FINISH
BREAK SHARP EDGES MAX. XX MIN. XX
OUTSTANDING ECN

Q.A. CATEGORY A-3

		DATE
DRAWN BY	Ralph Schoenfeld	11/5/03
CHECKED BY		
DESIGN APPROVAL		
ENGINEER APPROVAL		
SUPVR. APPROVAL		

NEXT ASSEMBLY

BROOKHAVEN NATIONAL LABORATORY
UPTON, N.Y. 11973
RHIC CONTROLS WIRING DIAGRAM
1012A, VME CHASSIS CFE-12A-VME
VMIC 1160A 201D

SIZE D
94028579
DRAWING NUMBER
REV. A

MATERIAL: ——— SCALE: FULL WEIGHT: – SHEET 41

*AUTOCAD

REV.	ZONE	ECN NO.	DATE	BY	CKR	APP.

Schoenfeld, Controls 11/20/2003 1:32 PM 8579_42.dwg

VMIC 2170A-210D
BLDG #: 1012A
RACK #: R12A15
CHASSIS ID: CFE-12A-VME
SLOT #: 5
A16 BASE ADDRESS: 0XE100

VMIACC BT01
BLDG #: 1012A
RACK #: R12A15
CHASSIS ID: N/A
SLOT #:
BASE ADDRESS:

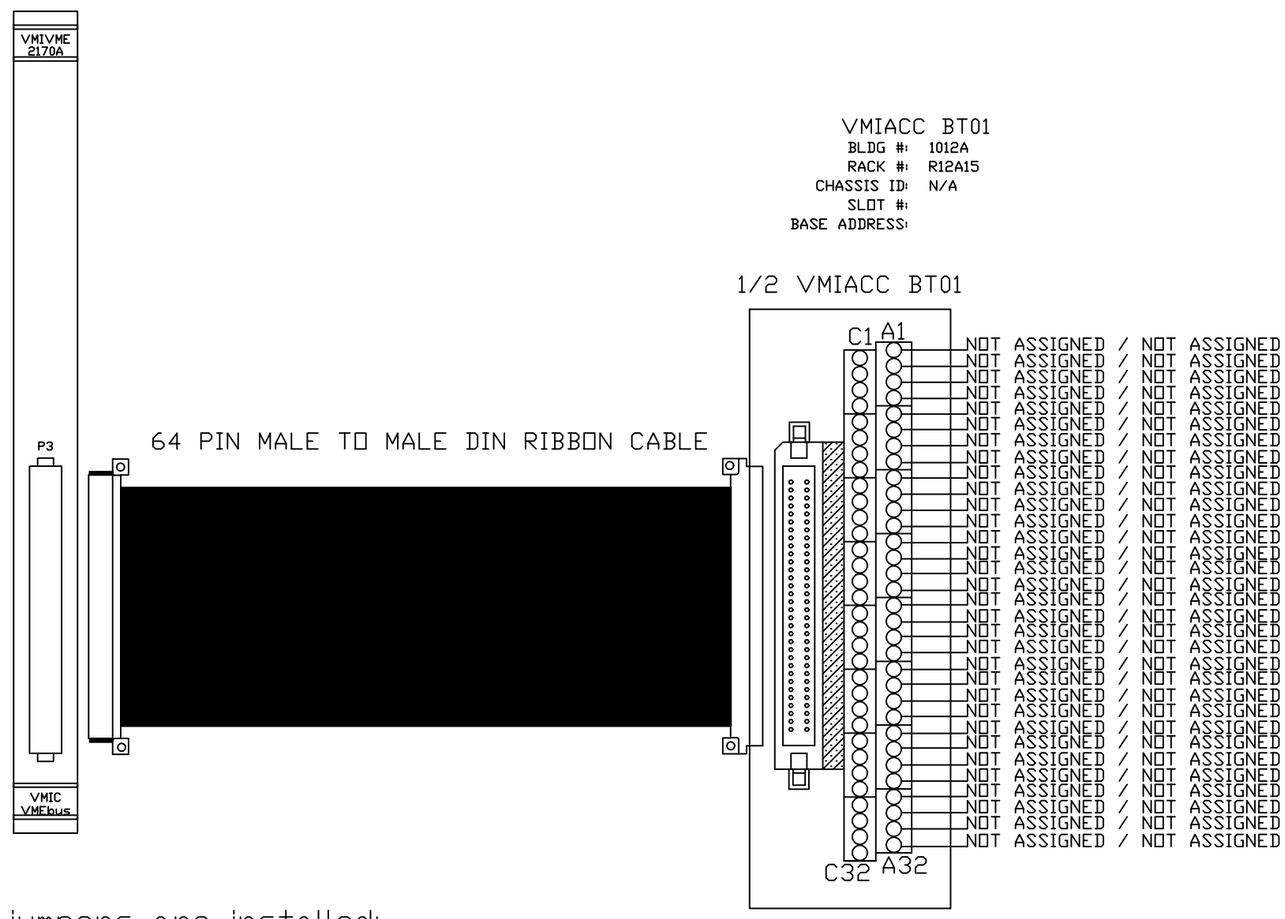

The following jumpers are installed:
A12, A11, A10, A9, A7, A6, A5, A4, A3, A2

JA1=open SHORT SUPERVISORY I/O access

-3	-2	-1	REF DESIGNATOR	ITEM NO.	DESCRIPTION	MAT'L. DWG NO.,SPEC. NO.
QTY REQD						

INTERPRET IN GENERAL ACCORDANCE WITH ASME Y14.24M-1989
UNLESS OTHERWISE SPECIFIED DIMENSIONS ARE IN INCHES
DECIMAL TOLERANCES .X ±.030 .XX ±.015 .XXX ±.005
ANGULAR TOLERANCE ± .5°
OUTSTANDING ECN
NA FINISH
BREAK SHARP EDGES MAX. XX MIN. XX

Q.A. CATEGORY A-3

		DATE
DRAWN BY	Ralph Schoenfeld	11/5/03
CHECKED BY		
DESIGN APPROVAL		
ENGINEER APPROVAL		
SUPVR. APPROVAL		

NEXT ASSEMBLY

BROOKHAVEN NATIONAL LABORATORY
UPTON, N.Y. 11973
RHIC CONTROLS WIRING DIAGRAM
1012A, VME CHASIS CFE-12A-VME
VMIC 2170A 210D

SIZE D | DRAWING NUMBER 94028579 | REV. A

MATERIAL: ——— SCALE: FULL WEIGHT: – SHEET 42

*AUTOCAD

REV.	ZONE	ECN NO.	DATE	BY	CKR	APP.

Schoenfeld, Controls 11/21/2003 8:12 AM 8579_43.dwg

OMS MOTOR CONTROL MODULE VX2-006

BLDG #: 1012A
RACK #: R12A15
CHASSIS ID: CFE-12A-VME
SLOT #: 6
A16 BASE ADDRESS: 0XF400

V186 MOTOR CONTROL MODULE

BLDG #: 1012A
RACK #: R12A15
CHASSIS ID: CFE-12A-VME
SLOT #: 7
Axx BASE ADDRESS: NA

VX-2 JUMPER LIST

S2 = 1 TO 6 ON, 7 & 8 OFF
S3 = 1 TO 5 OFF, 6 ON, 7 & 8 OFF
S5 = 1 OFF, 2 ON, 3 TO 8 OFF
S6 = 1 OFF, 2 ON, 3 OFF, 4 & 5 ON, 6 TO 8 OFF
S7 = ALL ON
S8 = 1 TO 4 OFF, 5 ON, 6 OFF, 7 & 8 ON
S9 = 1 TO 8 OFF

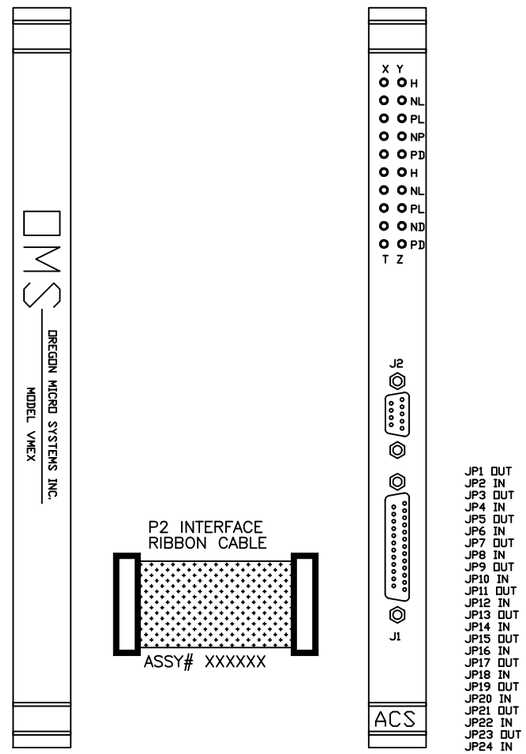

P2 INTERFACE
RIBBON CABLE

ASSY# XXXXXX

BUS GRANT & IACK
JUMPERS MUST BE
INSTALLED

-3	-2	-1	REF DESIGNATOR	ITEM NO.	DESCRIPTION	MAT'L DWG NO.,SHL NO.
QTY REQD						

INTERPRET IN GENERAL ACCORDANCE WITH ASME Y14.24M-1989

UNLESS OTHERWISE SPECIFIED DIMENSIONS ARE IN INCHES

DECIMAL TOLERANCES
.X ±.030
.XX ±.015
.XXX ±.005
ANGULAR TOLERANCE
± .5°

NA FINISH

BREAK SHARP EDGES
MAX. XX MIN. XX

OUTSTANDING ECN

Q.A. CATEGORY A-3

		DATE
DRAWN BY	Ed Koropsak	5/09/01
CHECKED BY		
DESIGN APPROVAL		
ENGINEER APPROVAL		
SUPVR. APPROVAL		

NEXT ASSEMBLY

BROOKHAVEN NATIONAL LABORATORY
UPTON, N.Y. 11973

RHIC CONTROLS WIRING DIAGRAM
1012A, VME CHASSIS CFE-12A-VME
OMS MOTOR CONTROLLER

SIZE D
DRAWING NUMBER 94028579
REV. A

MATERIAL: SCALE: NA WEIGHT: SHEET 43

*AUTOCAD

REV.	ZONE	ECN NO.	DATE	BY	CKR	APP.

Schoenfeld, Controls 11/20/2003 1:29 PM 8579_44.dwg

VMIVME 3122-442
BLDG #: 1012A
RACK #: R12A15
CHASSIS ID: CFE-12A-VME
SLOT #: 8
A24 BASE ADDRESS: 0X024000

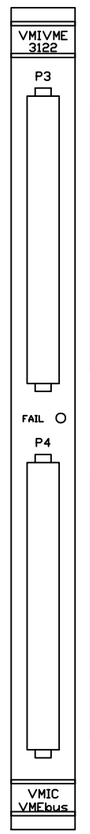

64 Pin male to male ribbon cable.

VMIACC BT01
BLDG #: 1012A
RACK #: R12A15
CHASSIS ID: N/A
SLOT #:
BASE ADDRESS:

1/2 VMIACC BT01

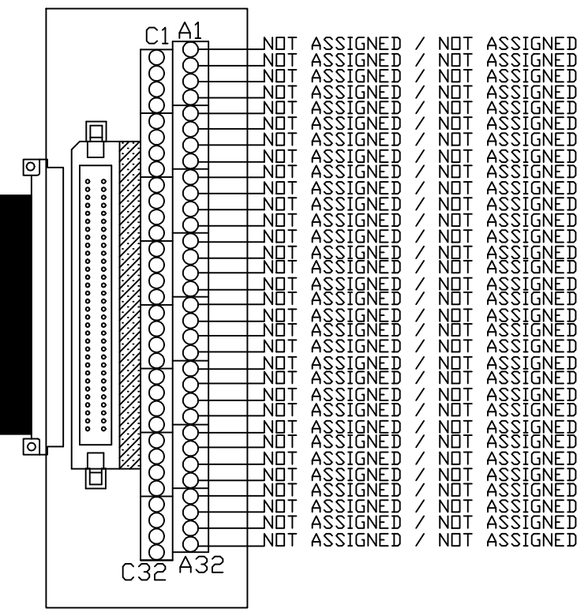

64 Pin male to male ribbon cable.

VMIACC BT01
BLDG #: 1012A
RACK #: R12A15
CHASSIS ID: N/A
SLOT #:
BASE ADDRESS:

1/2 VMIACC BT01

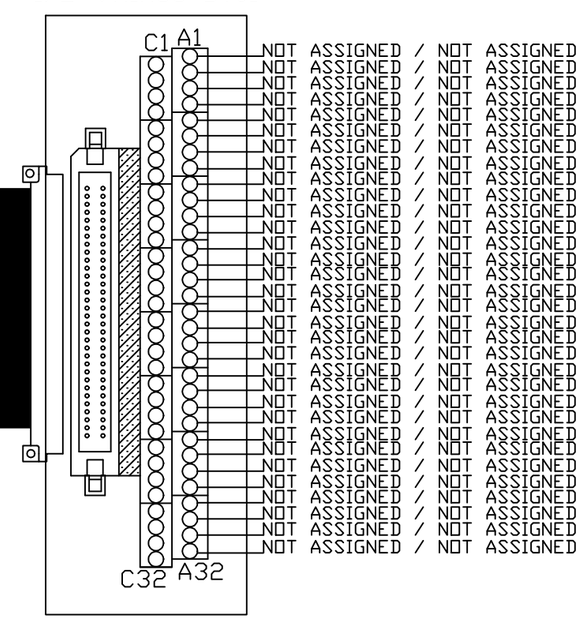

THE FOLLOWING JUMPERS ARE INSTALLED:
A18-A31, A16, A15, A13, A12

E11=BOTH OUT (STANDARD ADDRESS MODE)

E13=BOTH OUT (SUPERVISORY ACCESS)

-3	-2	-1	REF DESIGNATOR	ITEM NO.	DESCRIPTION	MAT'L. DWG NO.,BNL NO.
QTY REQD						

INTERPRET IN GENERAL ACCORDANCE WITH ASME Y14.24M-1989

UNLESS OTHERWISE SPECIFIED DIMENSIONS ARE IN INCHES
DECIMAL TOLERANCES
.X ±.030
.XX ±.015
.XXX ±.005
ANGULAR TOLERANCE ± .5°

OUTSTANDING ECN

NA FINISH

BREAK SHARP EDGES
MAX. XX MIN. XX

Q.A. CATEGORY A-3	DATE	
DRAWN BY Ralph Schoenfeld	11/5/03	
CHECKED BY		
DESIGN APPROVAL		
ENGINEER APPROVAL		
SUPVR. APPROVAL		
NEXT ASSEMBLY		

BROOKHAVEN NATIONAL LABORATORY
UPTON, N.Y. 11973

RHIC CONTROLS WIRING DIAGRAM
1012A, VME CHASSIS CFE-12A-VME
VMIVME 3122 442

SIZE D | DRAWING NUMBER 94028579 | REV. A

MATERIAL: ——— SCALE: FULL WEIGHT: – SHEET 44

*AUTOCAD

REV.	ZONE	ECN NO.	DATE	BY	CKR	APP.

Schoenfeld, Controls 11/20/2003 1:18 PM 8579_45.dwg

FRONT END COMPUTER

BLDG #: 1012A
RACK #: R12A17
CHASSIS ID: CFE-12A-POLAR1
SLOT#: 1
FEC NAME: cfe-12a-polar1

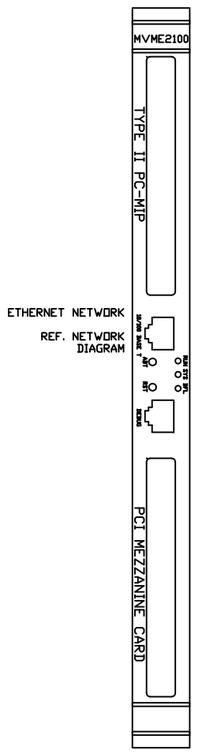

DEVICE: MEMORY BOARD

BLDG #: 1012A
RACK #: R12A17
CHASSIS ID: CFE-12A-POLAR1
SLOT #: 2
A24 BASE ADDRESS:

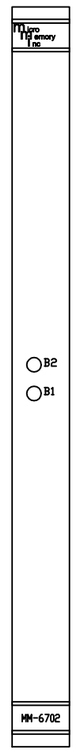

JUMPER LIST
1. REMOVE E1.
2. INSTALL E15.
3. SW3 CLOSE ALL POSITIONS.
4. SW2 CLOSE POSITIONS 7 AND 8.
5. SW1 CLOSE POSITIONS 2-8.
6. INSTALL E14 AND E25 TO ENABLE BATTERIES

DEVICE: V108 UTILITY MODULE

BLDG #: 1012A
RACK #: R12A17
CHASSIS ID: CFE-12A-POLAR1
SLOT #: 3
A24 BASE ADDRESS: 0X4000

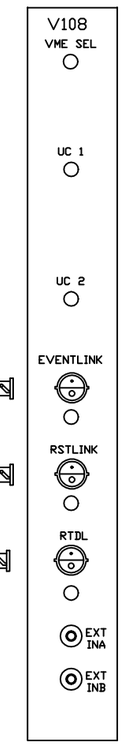

ASSY# 94028094

RESET CODE: F00A

EVENT LINK
BLDG #: 1012A
RACK #: R12A20
FANOUT #: A

OUTPUT J12

RESET LINK
BLDG #: 1012A
RACK #: R12A20
FANOUT #: C

OUTPUT J14

REAL TIME DATA LINK
BLDG #: 1020A
RACK #: R12A20
FANOUT #: B

OUTPUT J12

ASSY# 94028176
LENGTH AS REQUIRED
(TYP 3 PLACES)

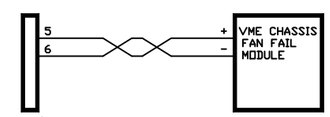

CONNECT TO P2 PINS
ON REAR OF VME CHASSIS
CABLE & CONNECTOR SUPPLIED
WITH VME CHASSIS

JUMPER LIST

E25 through E50 are configured for remote reset address at the time of board acceptance test.
DO NOT MODIFY!

Remote reset pulls VME SYS Reset.
E58-E60, E59-E61

A24 BASE ADDRESS= 4000h
E57-E13, E2-E14, E3-E15, E4-E16, E5-E17, E6-E18
E7-E19, E8-E20, E9-E21, E10-E22, E11-E24, E57-E23
SW1=OPEN
SW2=CLOSED
SW3=OPEN
SW4=OPEN

-3	-2	-1	REF DESIGNATOR	ITEM NO.	DESCRIPTION	MAT'L DWG NO.,SPEC NO.
QTY REQD						

INTERPRET IN GENERAL ACCORDANCE WITH ASME Y14.24M-1989
UNLESS OTHERWISE SPECIFIED DIMENSIONS ARE IN INCHES
DECIMAL TOLERANCES .X ±.030 .XX ±.015 .XXX ±.005
ANGULAR TOLERANCE ± .5°
FINISH: NA
BREAK SHARP EDGES MAX. XX MIN. XX
OUTSTANDING ECN

Q.A. CATEGORY A-3
DRAWN BY Venegas DATE 3/7/00
CHECKED BY
DESIGN APPROVAL
ENGINEER APPROVAL
SUPVR. APPROVAL
NEXT ASSEMBLY

BROOKHAVEN NATIONAL LABORATORY
UPTON, N.Y. 11973
C-A CONTROLS WIRING DIAGRAM
1012A, VME CHASSIS CFE-12A-POLAR1
FT END COMP/V108 UTIL MODULE

SIZE D
DRAWING NUMBER 94028579
REV. A
MATERIAL: ——— SCALE: NA WEIGHT: – SHEET 45

*AUTOCAD

REV.	ZONE	ECN NO.	DATE	BY	CKR	APP.

Schoenfeld, Controls 11/20/2003 1:17 PM 8579_46.dwg

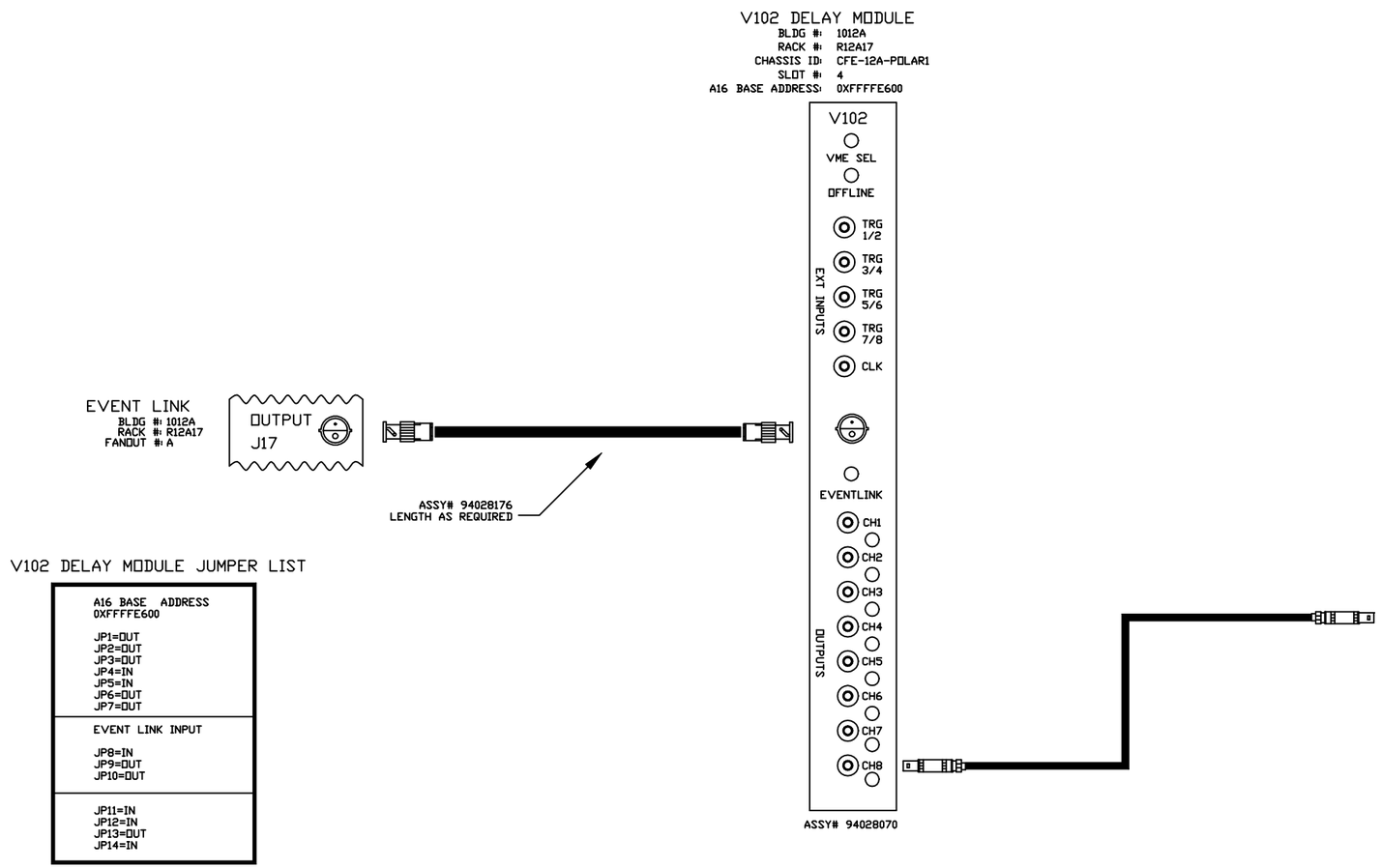

V102 DELAY MODULE JUMPER LIST

A16 BASE ADDRESS 0XFFFFE600 JP1=OUT JP2=OUT JP3=OUT JP4=IN JP5=IN JP6=OUT JP7=OUT
EVENT LINK INPUT JP8=IN JP9=OUT JP10=OUT
JP11=IN JP12=IN JP13=OUT JP14=IN

-3	-2	-1	REF DESIGNATOR	ITEM NO.	DESCRIPTION	MAT'L DWG NO.,SPEC. NO.
QTY REQD						

INTERPRET IN GENERAL ACCORDANCE WITH ASME Y14.24M-1989

UNLESS OTHERWISE SPECIFIED DIMENSIONS ARE IN INCHES

DECIMAL TOLERANCES
.X ±.030
.XX ±.015
.XXX ±.005
ANGULAR TOLERANCE
± .5°

OUTSTANDING ECN

NA FINISH

BREAK SHARP EDGES
MAX. XX MIN. XX

Q.A. CATEGORY A-3		DATE
DRAWN BY	Venegas	3/21/00
CHECKED BY		
DESIGN APPROVAL		
ENGINEER APPROVAL		
SUPVR. APPROVAL		

NEXT ASSEMBLY

BROOKHAVEN NATIONAL LABORATORY
UPTON, N.Y. 11973

C-A CONTROLS WIRING DIAGRAM

1012A, VME CHASSIS CFE-12A-POLAR1

V102 DELAY MODULE

SIZE D | DRAWING NUMBER 94028579 | REV. A

MATERIAL: ——— SCALE: NA WEIGHT: – SHEET 46

*AUTOCAD

REV.	ZONE	ECN NO.	DATE	BY	CKR	APP.

Schoenfeld, Controls 11/20/2003 1:16 PM 8579_47.dwg

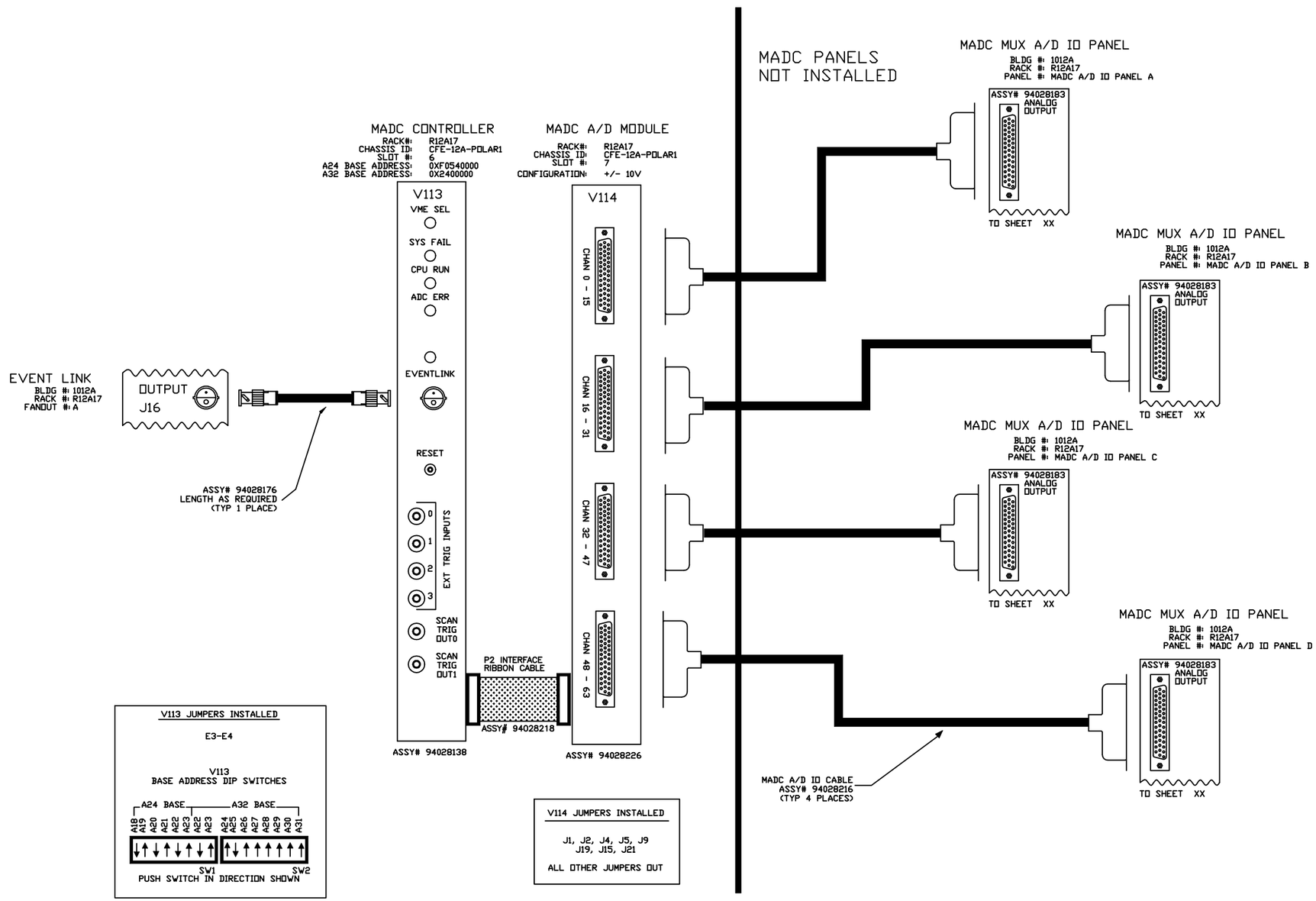

-3	-2	-1	REF DESIGNATOR	ITEM NO.	DESCRIPTION	MAT'L DWG NO./BHL NO.
QTY REQD						

INTERPRET IN GENERAL ACCORDANCE WITH ASME Y14.24M-1989

UNLESS OTHERWISE SPECIFIED DIMENSIONS ARE IN INCHES

DECIMAL TOLERANCES
.X ±.030
.XX ±.015
.XXX ±.005
ANGULAR TOLERANCE
± .5°

NA FINISH

BREAK SHARP EDGES
MAX. XX MIN. XX

OUTSTANDING ECN

Q.A. CATEGORY A-3		DATE
DRAWN BY	Venegas	3/21/00
CHECKED BY		
DESIGN APPROVAL		
ENGINEER APPROVAL	R. MICHNOFF	10/31/97
SUPVR. APPROVAL		

NEXT ASSEMBLY

BROOKHAVEN NATIONAL LABORATORY
UPTON, N.Y. 11973

RHIC CONTROLS WIRING DIAGRAM

1012A, VME CHASSIS CFE-12A-POLAR1

MADC SYSTEM

SIZE D | 94028579 | REV. A

DRAWING NUMBER

MATERIAL: ——— SCALE: NA WEIGHT: – SHEET 47

*AUTOCAD

REV.	ZONE	ECN NO.	DATE	BY	CKR	APP.

Schoenfeld, Controls 11/20/2003 1:15 PM 8579_48.dwg

(A)

OMS MOTOR CONTROL MODULE VMEX-2E

BLDG #: 1012A
RACK #: 12A17
CHASSIS ID: CFE-12A-POLAR1
SLOT #: 8
A16 BASE ADDRESS: 0XFC40

MOTOR CONTROL MODULE

BLDG #: 1012A
RACK #: 12A17
CHASSIS ID: CFE-12A-POLAR1
SLOT #: 9
Axx BASE ADDRESS: NA

VMEX JUMPER CONFIGURATION

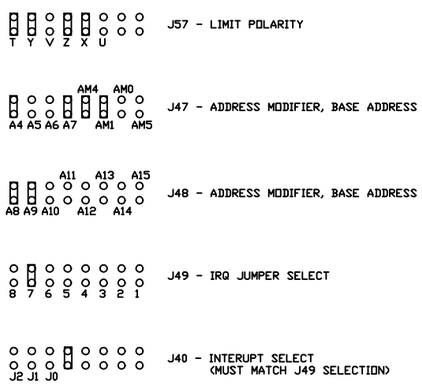

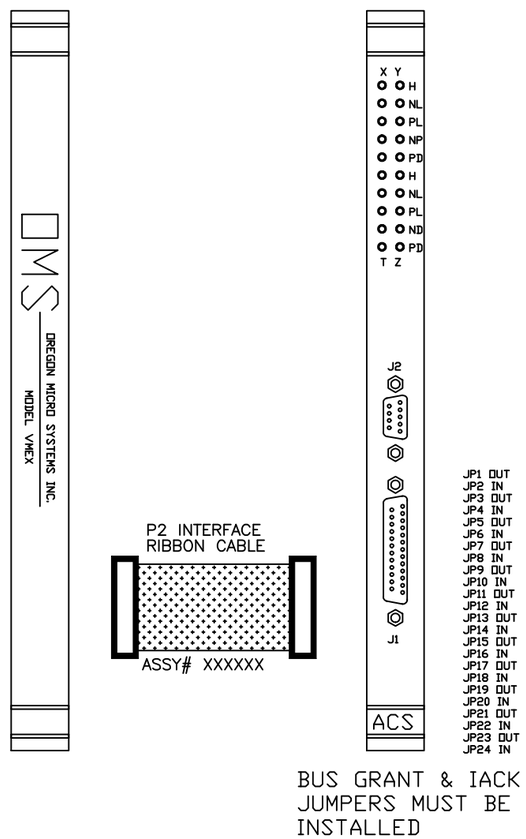

BUS GRANT & IACK JUMPERS MUST BE INSTALLED

BLUE HORIZ

(B)

OMS MOTOR CONTROL MODULE VMEX-2E

BLDG #: 1012A
RACK #: 12A17
CHASSIS ID: CFE-12A-POLAR1
SLOT #: 10
A16 BASE ADDRESS: 0XFC50

MOTOR CONTROL MODULE

BLDG #: 1012A
RACK #: 12A17
CHASSIS ID: CFE-12A-POLAR1
SLOT #: 11
Axx BASE ADDRESS: NA

VMEX JUMPER CONFIGURATION

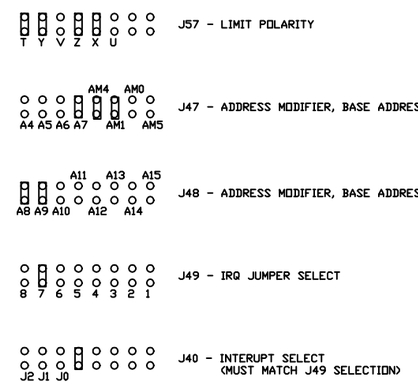

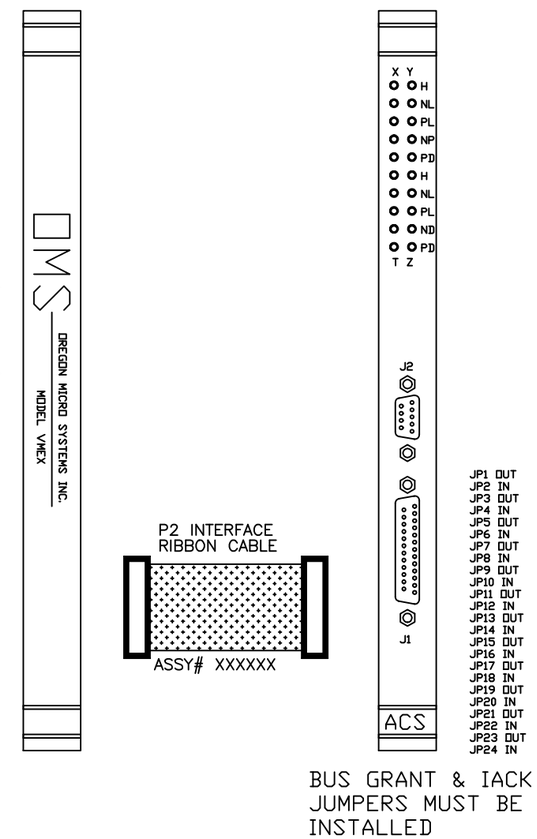

BUS GRANT & IACK JUMPERS MUST BE INSTALLED

BLUE VERT

-3	-2	-1	REF DESIGNATOR	ITEM NO.	DESCRIPTION	MAT'L DWG NO.,SHL NO.
QTY REQD						

INTERPRET IN GENERAL ACCORDANCE WITH ASME Y14.24M-1989

UNLESS OTHERWISE SPECIFIED DIMENSIONS ARE IN INCHES

DECIMAL TOLERANCES
.X ±.030
.XX ±.015
.XXX ±.005
ANGULAR TOLERANCE
± .5°

NA FINISH

BREAK SHARP EDGES
MAX. XX MIN. XX

OUTSTANDING ECN

Q.A. CATEGORY A-3

		DATE
DRAWN BY	Al Watson	3/14/00
CHECKED BY		
DESIGN APPROVAL		
ENGINEER APPROVAL		
SUPVR. APPROVAL		

NEXT ASSEMBLY

BROOKHAVEN NATIONAL LABORATORY
UPTON, N.Y. 11973

RHIC CONTROLS

1012A, VME CHASSIS CFE-12A-POLAR1

OMS MOTOR CONTROLLER

SIZE D

DRAWING NUMBER 94028579

REV. A

MATERIAL: SCALE: NA WEIGHT: SHEET 48

*AUTOCAD

Schoenfeld, Controls 11/20/2003 1:08 PM 8579_49.dwg

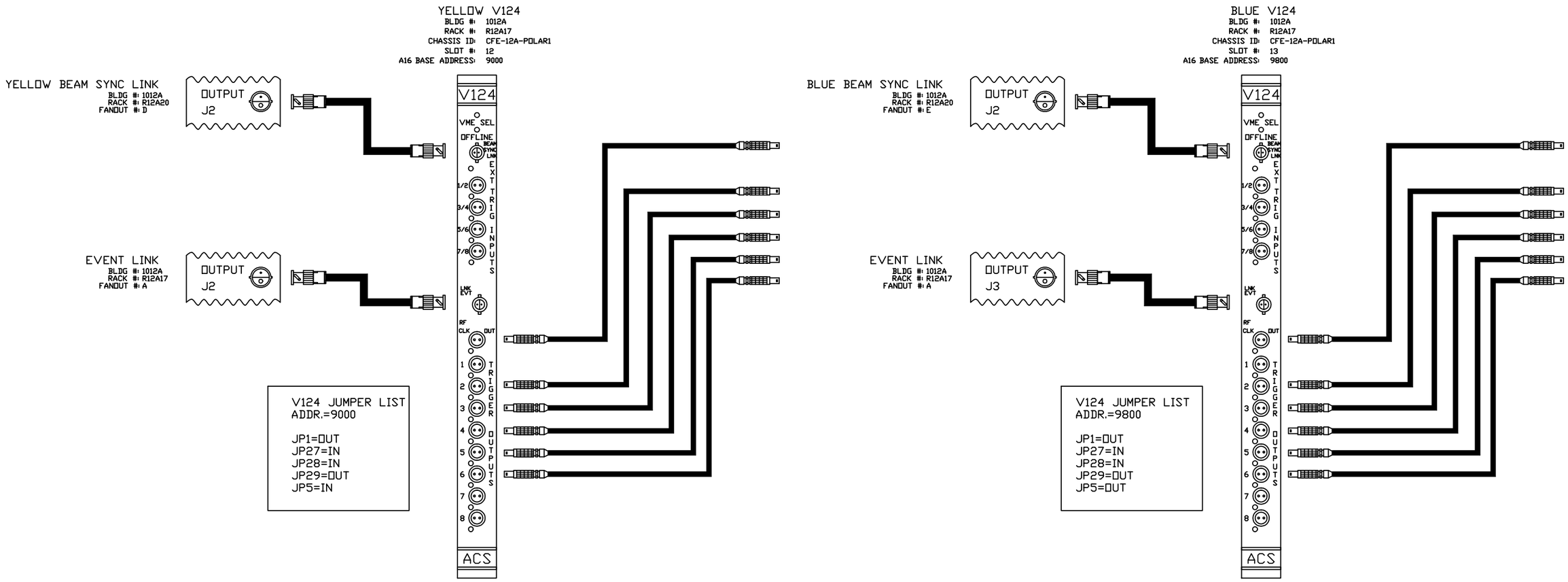

-3	-2	-1	REF DESIGNATOR	ITEM NO.	DESCRIPTION	MAT'L DWG NO.,BNL NO.
QTY REQD						

INTERPRET IN GENERAL ACCORDANCE WITH ASME Y14.24M-1989

UNLESS OTHERWISE SPECIFIED DIMENSIONS ARE IN INCHES

DECIMAL TOLERANCES
.X ±.030
.XX ±.015
.XXX ±.005
ANGULAR TOLERANCE
± .5°

NA FINISH

BREAK SHARP EDGES
MAX. XX MIN. XX

OUTSTANDING ECN

Q.A. CATEGORY A-3

		DATE
DRAWN BY	Ed Koropsak	3/19/01
CHECKED BY		
DESIGN APPROVAL		
ENGINEER APPROVAL		
SUPVR. APPROVAL		

NEXT ASSEMBLY

BROOKHAVEN NATIONAL LABORATORY
UPTON, N.Y. 11973

RHIC CONTROLS WIRING DIAGRAM

BLDG. 1012A CHASSIS CFE-12A-POLAR1

V124, YELLOW AND BLUE

SIZE D

DRAWING NUMBER 94028579

REV. A

MATERIAL: SCALE: NA WEIGHT: SHEET 49

*AUTOCAD

REV.	ZONE	ECN NO.	DATE	BY	CKR	APP.

Schoenfeld, Controls 11/21/2003 8:10 AM 8579_50.dwg

(C)

OMS MOTOR CONTROL MODULE VX-2

BLDG #: 1012A
RACK #: R12A17
CHASSIS ID: CFE-12A-POLAR1
SLOT #: 17
A16 BASE ADDRESS: 0XFC60

MOTOR CONTROL MODULE

BLDG #: 1012A
RACK #: 12A17
CHASSIS ID: CFE-12A-POLAR1
SLOT #: 18
Axx BASE ADDRESS: NA

VX-2 JUMPER LIST
S1=ALL ON
S2=1 TO 6 ON, 7 & 8 OFF
S3=1 TO 5 OFF, 6 ON, 7 & 8 OFF
S5=1 OFF, 2 ON, 3 TO 8 OFF
S6=1 OFF, 2 ON, 3 OFF, 4 & 5 ON, 6 TO 8 OFF
S7=1 ON, 2 & 3 OFF, 4 TO 8 ON
S8=1 TO 6 OFF, 7 & 8 ON
S9=1 TO 8 OFF

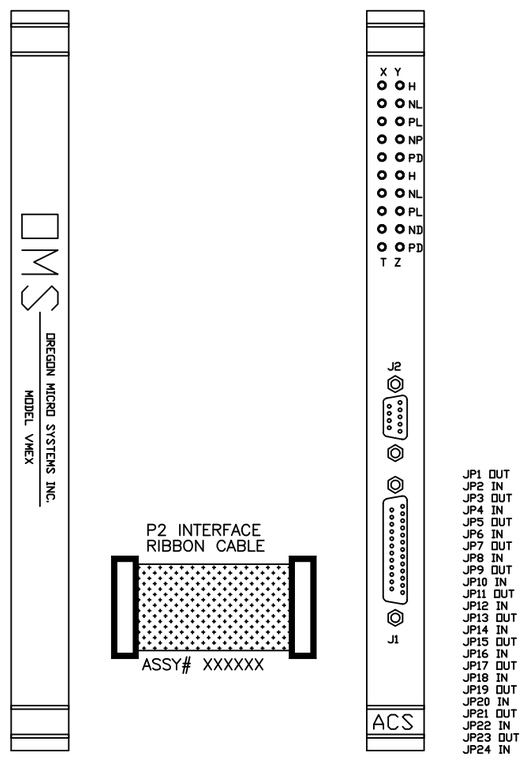

BUS GRANT & IACK
JUMPERS MUST BE
INSTALLED

YELLOW HORIZ

(D)

OMS MOTOR CONTROL MODULE VX-2

BLDG #: 1012A
RACK #: 12A17
CHASSIS ID: CFE-12A-POLAR1
SLOT #: 15
A16 BASE ADDRESS: 0XFC70

MOTOR CONTROL MODULE

BLDG #: 1012A
RACK #: 12A17
CHASSIS ID: CFE-12A-POLAR1
SLOT #: 16
Axx BASE ADDRESS: NA

VX-2 JUMPER LIST
S1=ALL ON
S2=1 TO 6 ON, 7 & 8 OFF
S3=1 TO 5 OFF, 6 ON, 7 & 8 OFF
S5=1 OFF, 2 ON, 3 TO 8 OFF
S6=1 OFF, 2 ON, 3 OFF, 4 & 5 ON, 6 TO 8 OFF
S7=1 ON, 2 TO 4 OFF, 5 TO 8 ON
S8=1 TO 6 OFF, 7 & 8 ON
S9=1 TO 8 OFF

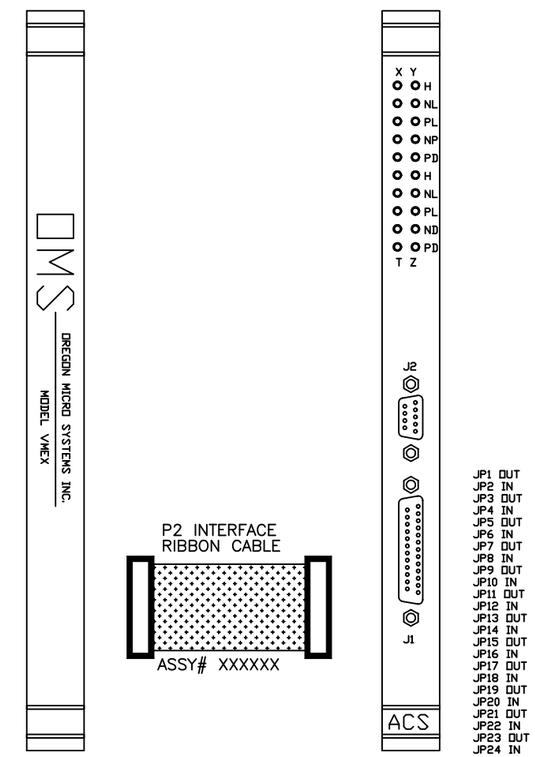

BUS GRANT & IACK
JUMPERS MUST BE
INSTALLED

YELLOW VERT

-3	-2	-1	REF DESIGNATOR	ITEM NO.	DESCRIPTION	MAT'L DWG NO.,SHL NO.
QTY REQD						

INTERPRET IN GENERAL ACCORDANCE WITH ASME Y14.24M-1989

UNLESS OTHERWISE SPECIFIED DIMENSIONS ARE IN INCHES

DECIMAL TOLERANCES
.X ±.030
.XX ±.015
.XXX ±.005
ANGULAR TOLERANCE
± .5°

NA FINISH

BREAK SHARP EDGES
MAX. XX MIN. XX

OUTSTANDING ECN

Q.A. CATEGORY A-3

		DATE
DRAWN BY	Ed Koropsak	5/09/01
CHECKED BY		
DESIGN APPROVAL		
ENGINEER APPROVAL		
SUPVR. APPROVAL		

NEXT ASSEMBLY

BROOKHAVEN NATIONAL LABORATORY
UPTON, N.Y. 11973

RHIC CONTROLS

BLDG. 1012A CHASSIS CFE-12A-POLAR1

OMS MOTOR CONTROLLER

SIZE D

DRAWING NUMBER 94028579

REV. A

MATERIAL: SCALE: NA WEIGHT: SHEET 50

*AUTOCAD

REV.	ZONE	ECN NO.	DATE	BY	CKR	APP.

Schoenfeld, Controls 11/20/2003 11:59 AM 8579_51.dwg

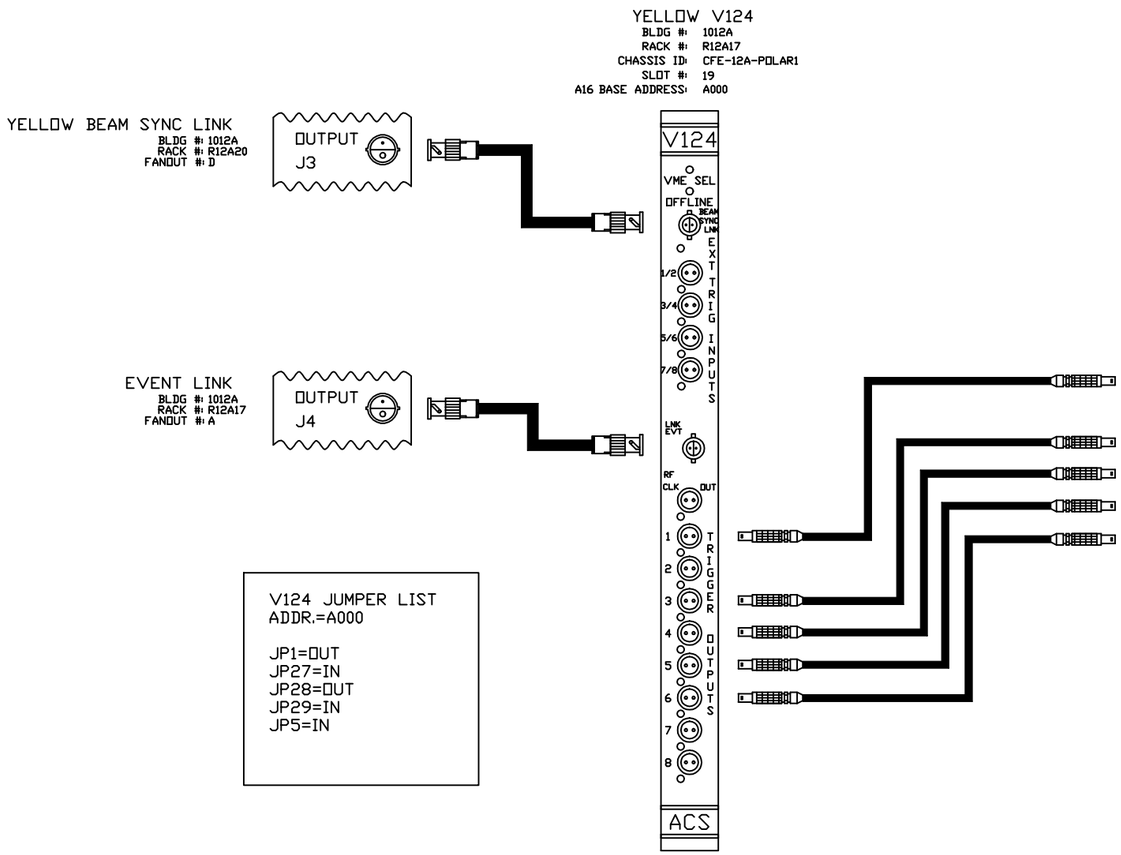

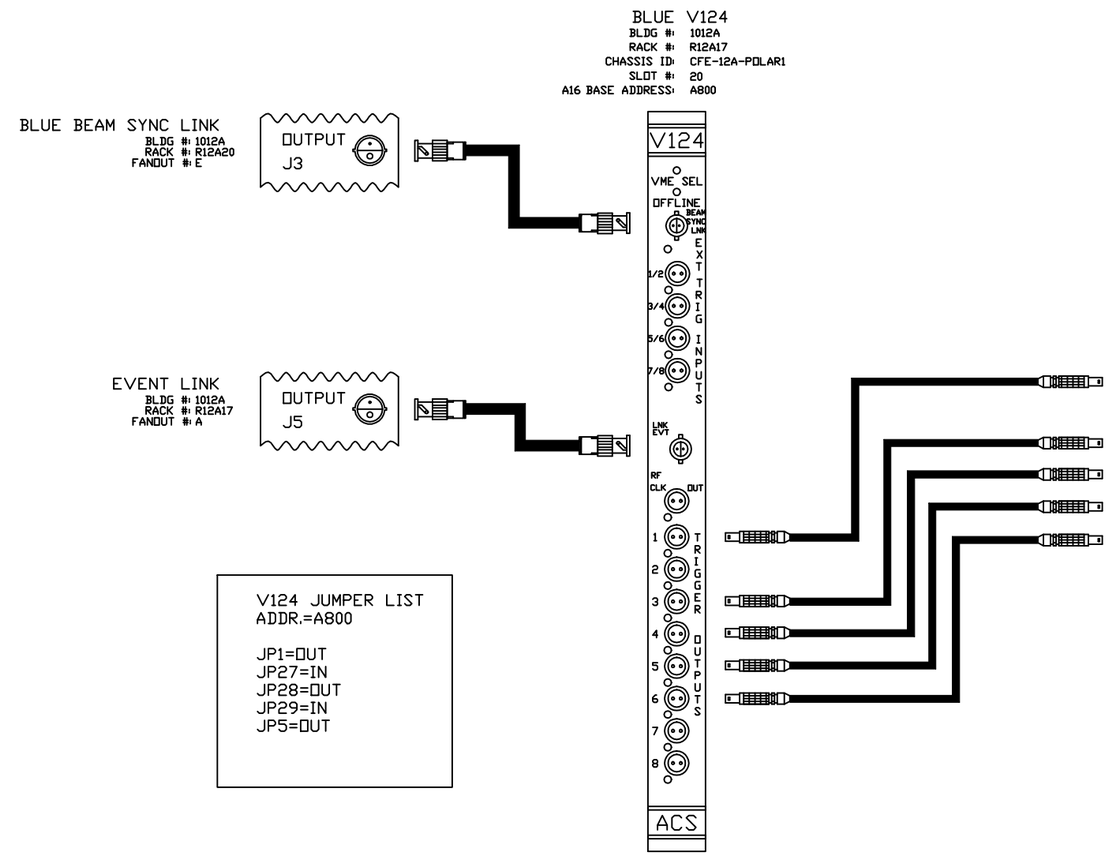

-3	-2	-1	REF DESIGNATOR	ITEM NO.	DESCRIPTION	MAT'L DWG NO.,BNL NO.
QTY REQD						

INTERPRET IN GENERAL ACCORDANCE WITH ASME Y14.24M-1989

UNLESS OTHERWISE SPECIFIED DIMENSIONS ARE IN INCHES

DECIMAL TOLERANCES
.X ±.030
.XX ±.015
.XXX ±.005
ANGULAR TOLERANCE ± .5°

OUTSTANDING ECN

NA FINISH

BREAK SHARP EDGES
MAX. XX MIN. XX

Q.A. CATEGORY A-3	DATE	
DRAWN BY Ed Koropsak	3/19/01	
CHECKED BY		
DESIGN APPROVAL		
ENGINEER APPROVAL		
SUPVR. APPROVAL		
NEXT ASSEMBLY		

BROOKHAVEN NATIONAL LABORATORY
UPTON, N.Y. 11973

RHIC CONTROLS WIRING DIAGRAM

BLDG. 1012A CHASSIS CFE-12A-POLAR1

V124, YELLOW AND BLUE

SIZE D | DRAWING NUMBER 94028579 | REV. A

MATERIAL: | SCALE: NA | WEIGHT: | SHEET 51

*AUTOCAD

Schoenfeld, Controls 11/5/2004 2:55 PM 8579_52.dwg

SIS3803 SCALER
BLDG #: 1012A
RACK #: R12A17
CHASSIS ID: CFE-12A-POLAR1
SLOT #: 21
A32 BASE ADDRESS: 0X83838000

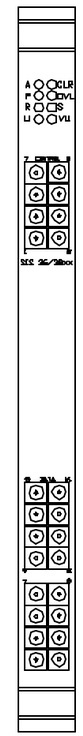

BOARD ADDRESS JUMPERS

EN_A16: OUT
EN_A24: OUT
EN_132: IN

SW_A32UI: 0
SW_A32L: 8
SW_A24U: 3
SW_A24L: 8
SW_A16U: 3 (IF MORE BD'S INSTALLED SW_A16U WILL BE 4,5,6 ETC)

J115: OUT
J_ALL: IN

-3	-2	-1	REF DESIGNATION	ECN NO.	DESCRIPTION	MFG. DWG NO.&NO.
QTY REQD						

INTERPRET IN GENERAL ACCORDANCE WITH ASME Y14.24M-1989
UNLESS OTHERWISE SPECIFIED DIMENSIONS ARE IN INCHES
DECIMAL TOLERANCES: .X ±.030, .XX ±.015, .XXX ±.005
ANGULAR TOLERANCE ±.5°
NA FINISH
BREAK SHARP EDGES
MAX. XX MIN. XX
OUTSTANDING ECN

Q.A. CATEGORY A-3

		DATE
DRAWN BY	VENEGAS	11/15/02
CHECKED BY		
DESIGN APPROVAL		
ENGINEER APPROVAL		
SUPVR. APPROVAL		

NEXT ASSEMBLY

BROOKHAVEN NATIONAL LABORATORY
UPTON, N.Y. 11973
RHIC CONTROLS WIRING DIAGRAM
BLDG. 1012A CFE-12A-POLAR1
SIS3803 VME SCALER

SIZE D | DRAWING NUMBER 94028579 | REV. A

MATERIAL: ——— SCALE: NA WEIGHT: - SHEET 52

*AUTOCAD

REV.	ZONE	ECN NO.	DATE	BY	CKR	APP.

Schoenfeld, Controls 11/20/2003 11:56 AM 8579_53.dwg

FRONT END COMPUTER

BLDG #: 1012A
RACK #: R12A16
CHASSIS ID: CFE-12A-EDS1
SLOT#: 1
FEC NAME: cfe-12a-eds1

MM-6702/4

BLDG #: 1012A
RACK #: R12A16
CHASSIS ID: CFE-12A-EDS1
SLOT #: 2
AXX BASE ADDRESS:

V108

BLDG #: 1012A
RACK #: R12A16
CHASSIS ID: CFE-12A-EDS1
SLOT #: 3
A24 BASE ADDRESS: 0X004000

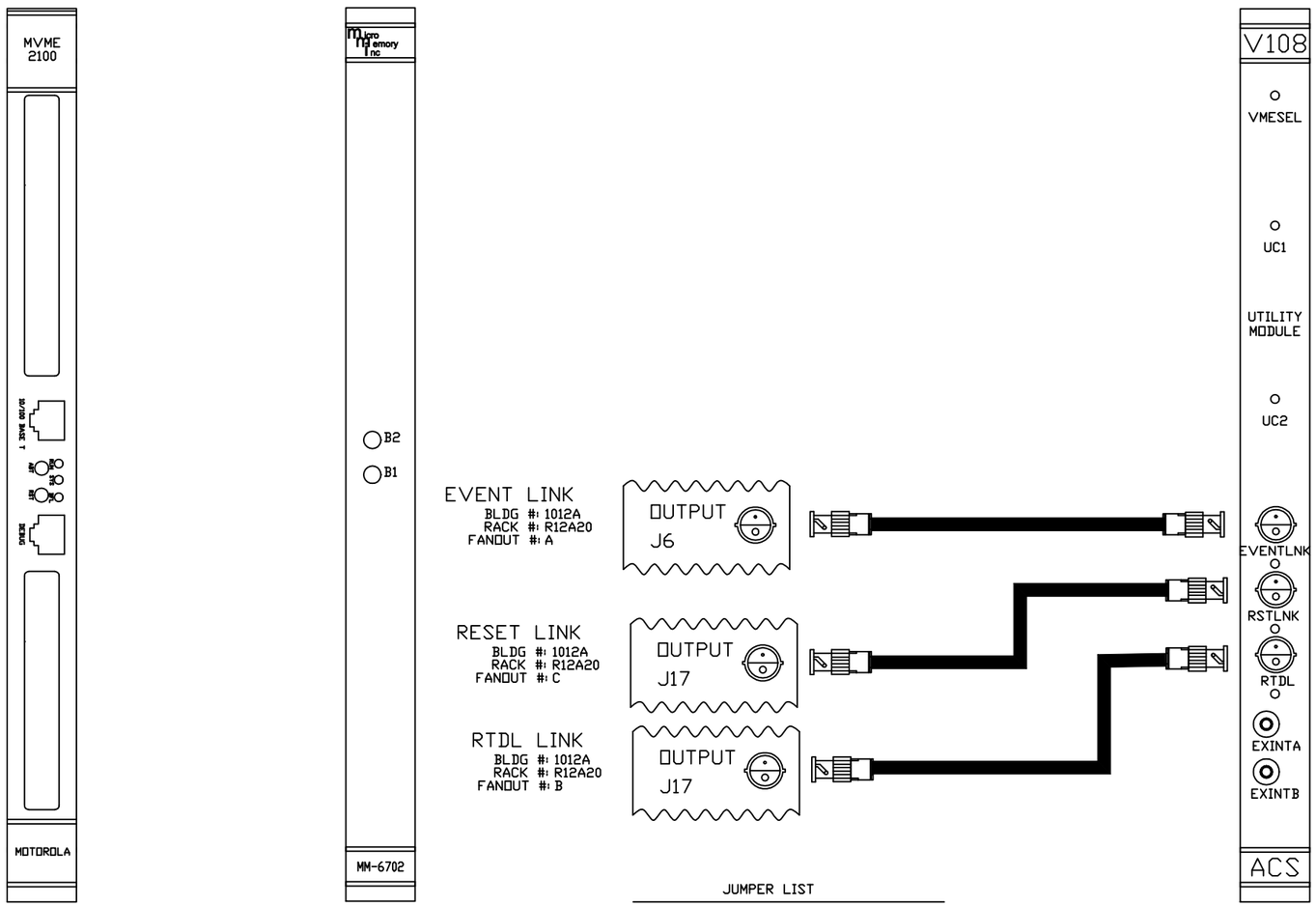

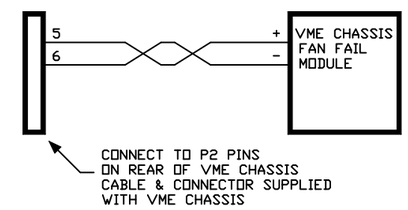

JUMPER LIST

E25 through E50 are configured for remote reset address at the time of board acceptance test.
DO NOT MODIFY!

Remote reset pulls VME SYS Reset.
E58-E60, E59-E61

A24 BASE ADDRESS= 4000h
E57-E13, E2-E14, E3-E15, E4-E16, E5-E17, E6-E18
E7-E19, E8-E20, E9-E21, E10-E22, E11-E24, E57-E23
SW1=OPEN
SW2=CLOSED
SW3=OPEN

-3	-2	-1	REF DESIGNATOR	ITEM NO.	DESCRIPTION	MAT'L. DWG NO.,SHL NO.
QTY REQD						

INTERPRET IN GENERAL ACCORDANCE WITH ASME Y14.24M-1989

UNLESS OTHERWISE SPECIFIED DIMENSIONS ARE IN INCHES
DECIMAL TOLERANCES
.X ±.030
.XX ±.015
.XXX ±.005
ANGULAR TOLERANCE ± .5°

NA FINISH
BREAK SHARP EDGES
MAX. XX MIN. XX

OUTSTANDING ECN

Q.A. CATEGORY A-3	DATE	
DRAWN BY Ralph Schoenfeld	11/5/03	
CHECKED BY		
DESIGN APPROVAL		
ENGINEER APPROVAL		
SUPVR. APPROVAL		
NEXT ASSEMBLY		

BROOKHAVEN NATIONAL LABORATORY
UPTON, N.Y. 11973

RHIC CONTROLS WIRING DIAGRAM
1012A, VME CHASSIS CFE-12A-EDS1
FT END COMP/V108 UTIL MODULE

SIZE D | DRAWING NUMBER 94028579 | REV. A

MATERIAL: ——— | SCALE: FULL | WEIGHT: – | SHEET 53

*AUTOCAD

Schoenfeld, Controls 11/20/2003 11:55 AM 8579_54.dwg

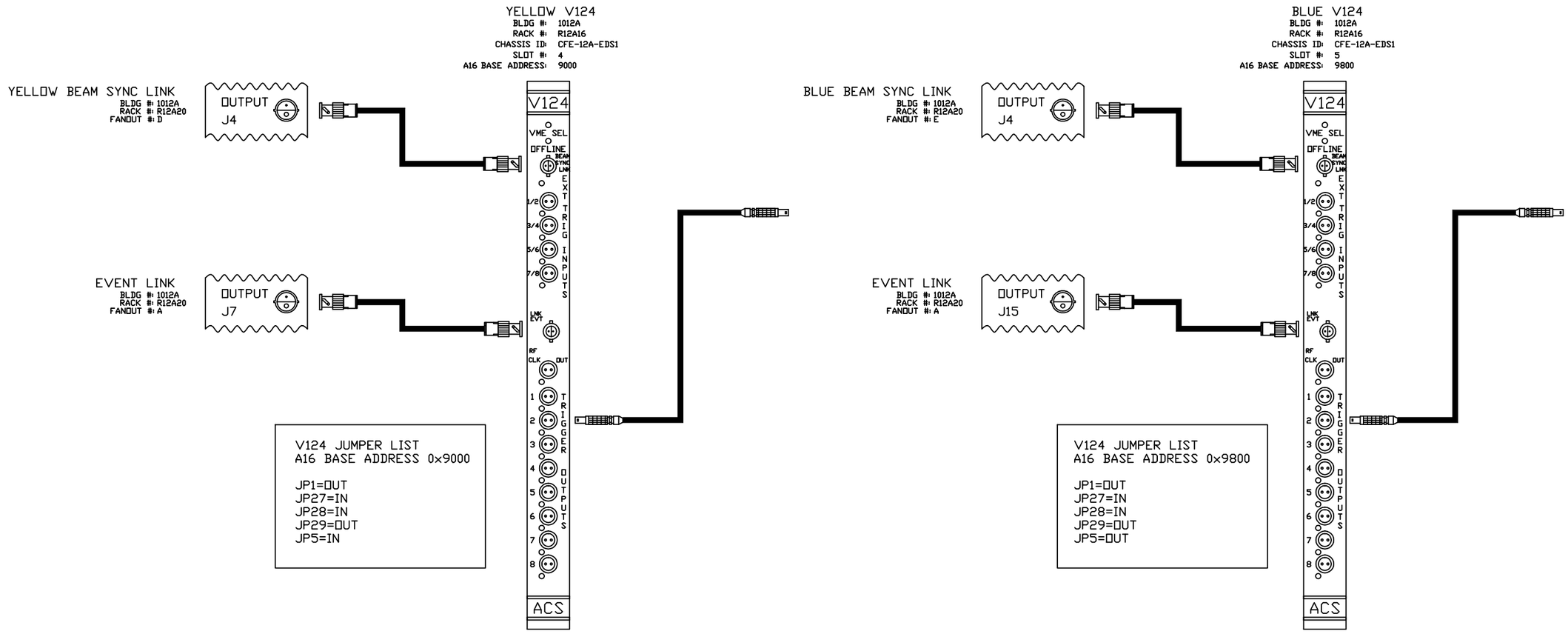

REV.	ZONE	ECN NO.	DATE	BY	CKR	APP.

-3	-2	-1	REF DESIGNATOR	ITEM NO.	DESCRIPTION	MAT'L DWG NO.,BNL NO.
QTY REQD						

INTERPRET IN GENERAL ACCORDANCE WITH ASME Y14.24M-1989

UNLESS OTHERWISE SPECIFIED DIMENSIONS ARE IN INCHES

DECIMAL TOLERANCES
.X ±.030
.XX ±.015
.XXX ±.005
ANGULAR TOLERANCE ± .5°

NA FINISH

BREAK SHARP EDGES MAX. XX MIN. XX

OUTSTANDING ECN

Q.A. CATEGORY A-3

		DATE
DRAWN BY	Ralph Schoenfeld	11/5/03
CHECKED BY		
DESIGN APPROVAL		
ENGINEER APPROVAL		
SUPVR. APPROVAL		

NEXT ASSEMBLY

BROOKHAVEN NATIONAL LABORATORY
UPTON, N.Y. 11973

RHIC CONTROLS WIRING DIAGRAM
1012A, VME CHASSIS CFE-12A-EDS1
V124, YELLOW & BLUE

SIZE D | DRAWING NUMBER 94028579 | REV. A

MATERIAL: | SCALE: NA | WEIGHT: | SHEET 54

*AUTOCAD

REV.	ZONE	ECN NO.	DATE	BY	CKR	APP.

Schoenfeld, Controls 11/20/2003 11:54 AM 8579_55.dwg

V189 ECL TO TTL MODULE

BLDG #: 1012A
RACK #: R12A16
CHASSIS ID: CFE-12A-EDS1
SLOT #: 6
BASE ADDRESS: NONE

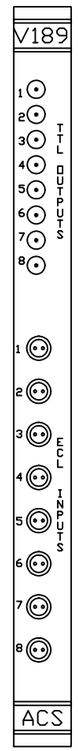

-3	-2	-1	REF DESIGNATOR	ITEM NO.	DESCRIPTION	MAT'L DWG NO./BNL NO.
QTY REQD						

INTERPRET IN GENERAL ACCORDANCE WITH ASME Y14.24M-1989

UNLESS OTHERWISE SPECIFIED DIMENSIONS ARE IN INCHES

DECIMAL TOLERANCES
.X ±.030
.XX ±.015
.XXX ±.005
ANGULAR TOLERANCE
± .5°

NA FINISH

BREAK SHARP EDGES
MAX. XX MIN. XX

OUTSTANDING ECN

Q.A. CATEGORY A-3

		DATE
DRAWN BY	Venegas	11/18/02
CHECKED BY		
DESIGN APPROVAL		
ENGINEER APPROVAL		
SUPVR. APPROVAL		

NEXT ASSEMBLY

BROOKHAVEN NATIONAL LABORATORY
UPTON, N.Y. 11973

RHIC CONTROLS WIRING DIAGRAM

BLDG. 1012A, VME CHASSIS CFE-12A-EDS1

V189 ECL TO TTL MODULE

SIZE D | DRAWING NUMBER 94028579 | REV. A

MATERIAL: ——— SCALE: NA WEIGHT: – SHEET 55

*AUTOCAD

REV.	ZONE	ECN NO.	DATE	BY	CKR	APP.

Schoenfeld, Controls 11/20/2003 11:53 AM 8579_56.dwg

HP E1366A 50 OHM RF MUX

BLDG #: 1012A
RACK #: R12A16
CHASSIS ID: CFE-12A-EDS1
SLOT #: 7
BASE ADDRESS: DE00

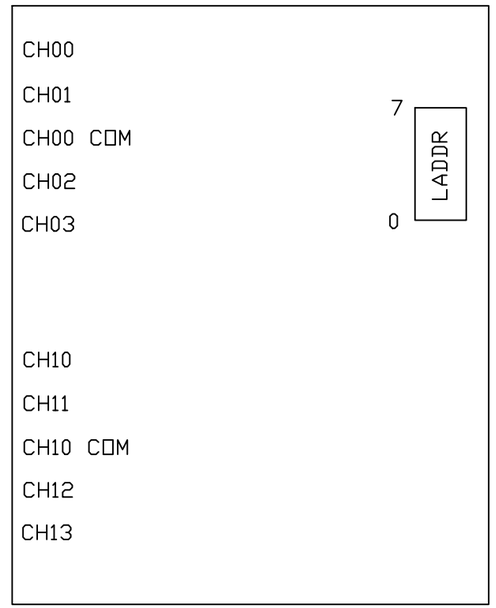

LADDR
SW7=0
SW6=1
SW5=1
SW4=1
SW3=1
SW2=0
SW1=0
SW0=0

BOTH IRQ'S SET TO 1

-3	-2	-1	REF DESIGNATOR	ITEM NO.	DESCRIPTION	MAT'L. DWG NO.,SPEC. NO.
QTY REQD						

INTERPRET IN GENERAL ACCORDANCE WITH ASME Y14.24M-1989

UNLESS OTHERWISE SPECIFIED DIMENSIONS ARE IN INCHES

DECIMAL TOLERANCES
.X ±.030
.XX ±.015
.XXX ±.005
ANGULAR TOLERANCE
± .5°

NA FINISH

BREAK SHARP EDGES
MAX. XX MIN. XX

OUTSTANDING ECN

Q.A. CATEGORY A-3		DATE
DRAWN BY	VENEGAS	10/25/02
CHECKED BY		
DESIGN APPROVAL		
ENGINEER APPROVAL		7/27/98
SUPVR. APPROVAL		
NEXT ASSEMBLY		

BROOKHAVEN NATIONAL LABORATORY
UPTON, N.Y. 11973

RHIC CONTROLS WIRING DIAGRAM

BLDG. 1012A CHASSIS CFE-12A-EDS1

HP E1366A RF MUX MODULE

SIZE D | DRAWING NUMBER 94028579 | REV. A

MATERIAL: ——— SCALE: NA WEIGHT: – SHEET 59

*AUTOCAD

REV.	ZONE	ECN NO.	DATE	BY	CKR	APP.

Schoenfeld, Controls 11/20/2003 11:52 AM 8579_57.dwg

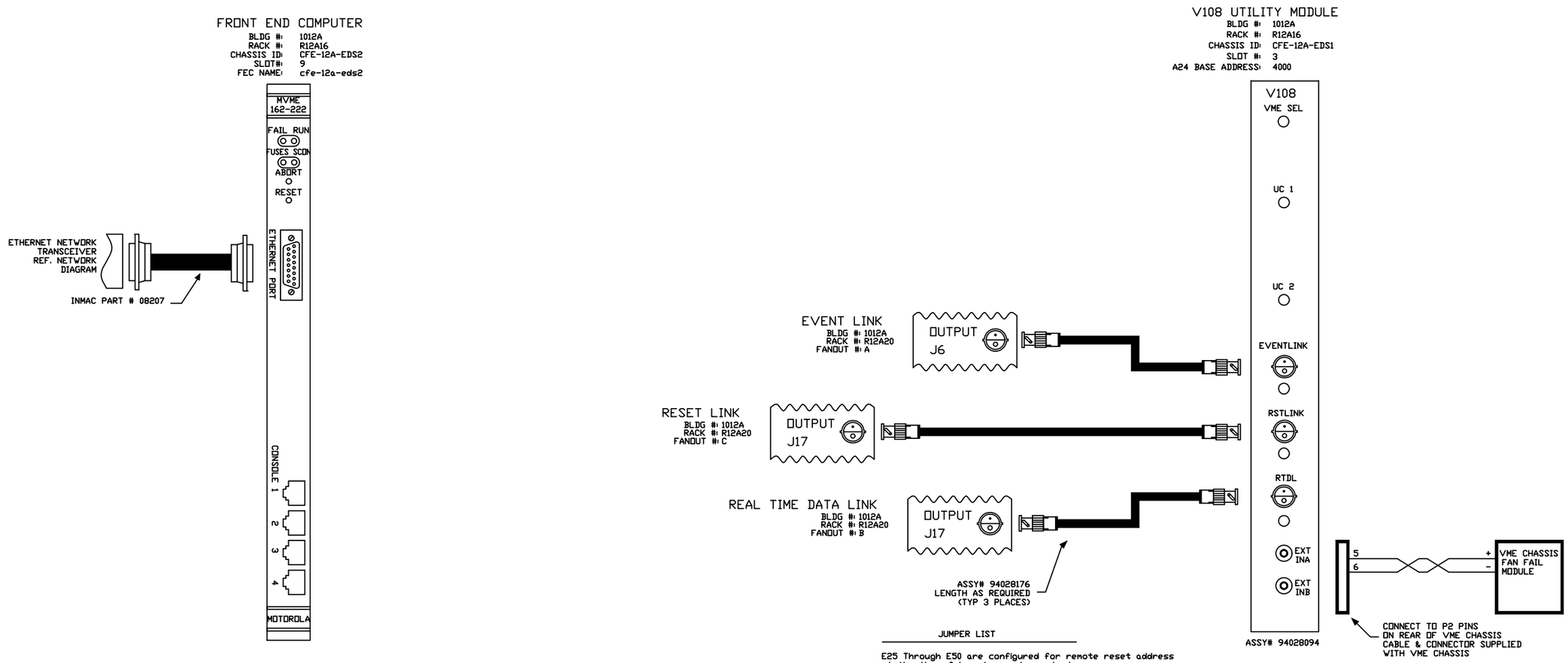

JUMPER LIST

E25 Through E50 are configured for remote reset address at the time of board acceptance test.
DO NOT MODIFY!

Remote reset pulls VME SYS Reset.
E58-E60, E59-E61

A24 BASE ADDRESS= 4000h
E57-E13, E2-E14, E3-E15, E4-E16, E5-E17, E6-E18
E7-E19, E8-E20, E9-E21, E10-E22, E11-E24, E57-E23
SW1=OPEN
SW2=CLOSED
SW3=OPEN
SW4=OPEN

-3	-2	-1	REF DESIGNATOR	ITEM NO.	DESCRIPTION	MAT'L DWG NO./INL NO.
QTY REQD						

INTERPRET IN GENERAL ACCORDANCE WITH ASME Y14.24M-1989	Q.A. CATEGORY A-3	DATE	BROOKHAVEN NATIONAL LABORATORY UPTON, N.Y. 11973
UNLESS OTHERWISE SPECIFIED DIMENSIONS ARE IN INCHES	DRAWN BY Ralph Schoenfeld	11/5/03	RHIC CONTROLS WIRING DIAGRAM
DECIMAL TOLERANCES .X ±.030 .XX ±.015 .XXX ±.005 ANGULAR TOLERANCE ± .5°	CHECKED BY / DESIGN APPROVAL / ENGINEER APPROVAL / SUPVR. APPROVAL		1012A, VME CHASSIS CFE-12A-EDS2
			FT END COMP/V108 UTIL MODULE
NA FINISH	BREAK SHARP EDGES MAX. XX MIN. XX	NEXT ASSEMBLY	SIZE D / DRAWING NUMBER 94028579 / REV. A
OUTSTANDING ECN			MATERIAL: ——— / SCALE: NA / WEIGHT: – / SHEET 57

*AUTOCAD

REV.	ZONE	ECN NO.	DATE	BY	CKR	APP.

Schoenfeld, Controls 11/20/2003 11:50 AM 8579_58.dwg

VMIC 2170A-200D
BLDG #: 1012A
RACK #: R12A16
CHASSIS ID: CFE-12A-EDS2
SLOT #: 20
A16 BASE ADDRESS: 0XE100

VMIACC BT01
BLDG #: 1012A
RACK #: R12A16
CHASSIS ID: N/A
SLOT #:
BASE ADDRESS:

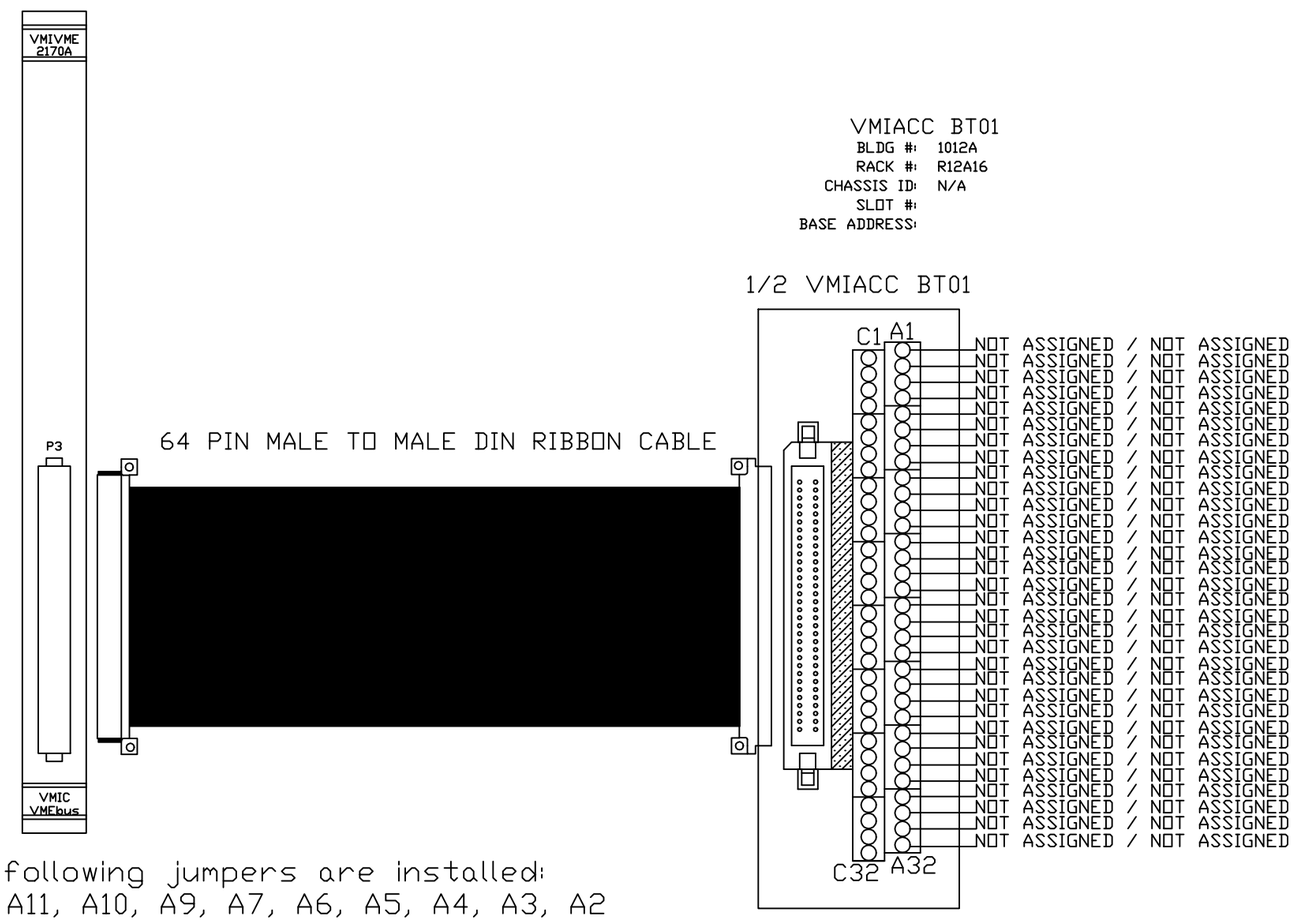

The following jumpers are installed:
A12, A11, A10, A9, A7, A6, A5, A4, A3, A2

JA1=open SHORT SUPERVISORY I/O access

-3	-2	-1	REF DESIGNATOR	ITEM NO.	DESCRIPTION	MAT'L. DWG NO.,SPEC. NO.
QTY REQD						

INTERPRET IN GENERAL ACCORDANCE WITH ASME Y14.24M-1989
UNLESS OTHERWISE SPECIFIED DIMENSIONS ARE IN INCHES
DECIMAL TOLERANCES .X ±.030 .XX ±.015 .XXX ±.005
ANGULAR TOLERANCE ± .5°
BREAK SHARP EDGES MAX. XX MIN. XX
FINISH NA
OUTSTANDING ECN

Q.A. CATEGORY A-3
DRAWN BY SCHOENFELD 9/29/03
CHECKED BY
DESIGN APPROVAL
ENGINEER APPROVAL
SUPVR. APPROVAL
NEXT ASSEMBLY

BROOKHAVEN NATIONAL LABORATORY
UPTON, N.Y. 11973
RHIC CONTROLS WIRING DIAGRAM
1012A, VME CHASSIS CFE-12A-EDS2
VMIC 2170A 200D
SIZE D
94028579
DRAWING NUMBER
REV. A
MATERIAL: ——— SCALE: FULL WEIGHT: – SHEET 58

*AUTOCAD

REV.	ZONE	ECN NO.	DATE	BY	CKR	APP.

SIS3803 SCALER
BLDG #: 1012A
RACK #: R12A16
CHASSIS ID: CFE-12A-EDS2
SLOT #: 21
A32 BASE ADDRESS: 0X8383800

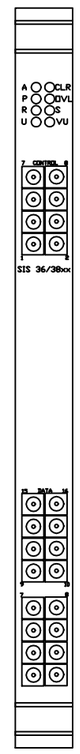

BOARD ADDRESS JUMPERS

EN_A16: OUT
EN_A24: OUT
EN_132: IN

SW_A32UI: 0
SW_A32L: 8
SW_A24U: 3
SW_A24L: 8
SW_A16U: 3 (IF MORE BD'S INSTALLED SW_A16U WILL BE 4,5,6 ETC)

J_ALL: IN

-3	-2	-1	REF DESIGNATOR	ITEM NO.	DESCRIPTION	MAT'L DWG NO./BNL NO.
QTY REQD						

INTERPRET IN GENERAL ACCORDANCE WITH ASME Y14.24M-1989
UNLESS OTHERWISE SPECIFIED DIMENSIONS ARE IN INCHES
DECIMAL TOLERANCES .X ±.030 .XX ±.015 .XXX ±.005 ANGULAR TOLERANCE ± .5°
FINISH NA
BREAK SHARP EDGES MAX. XX MIN. XX
OUTSTANDING ECN

Q.A. CATEGORY A-3	DATE	
DRAWN BY VENEGAS	10/25/02	
CHECKED BY		
DESIGN APPROVAL		
ENGINEER APPROVAL		
SUPVR. APPROVAL		
NEXT ASSEMBLY		

BROOKHAVEN NATIONAL LABORATORY
UPTON, N.Y. 11973
RHIC CONTROLS WIRING DIAGRAM
BLDG. 1012A CFE-12A-EDS2
SIS3803 VME SCALER

SIZE D | DRAWING NUMBER 94028579 | REV. A
MATERIAL: ——— SCALE: NA WEIGHT: – SHEET 59

*AUTOCAD

REV.	ZONE	ECN NO.	DATE	BY	CKR	APP.

Schoenfeld, Controls 11/20/2003 11:47 AM 8579_60.dwg

MADC MUX A/D IO PANEL

BLDG #: 1012A
RACK #: R12A18
PANEL #: MADC A/D IO PANEL C

FR SHEET 17

J8	CHAN 40 SPARE
J9	CHAN 41 SPARE
J10	CHAN 42 SPARE
J11	CHAN 43 SPARE
J12	CHAN 44 SPARE
J13	CHAN 45 SPARE
J14	CHAN 46 SPARE
J15	CHAN 47 SPARE

MADC MUX A/D IO PANEL

BLDG #: 1012A
RACK #: R12A18
PANEL #: MADC A/D IO PANEL D

FR SHEET 23

J0	CHAN 48 SPARE
J1	CHAN 49 SPARE
J2	CHAN 50 SPARE
J3	CHAN 51 SPARE
J4	CHAN 52 SPARE
J5	CHAN 53 SPARE
J6	CHAN 54 SPARE
J7	CHAN 55 SPARE
J8	CHAN 56 SPARE
J9	CHAN 57 SPARE
J10	CHAN 58 SPARE
J11	CHAN 59 SPARE
J12	CHAN 60 SPARE
J13	CHAN 61 SPARE
J14	CHAN 62 SPARE
J15	CHAN 63 SPARE

MADC MUX A/D IO PANEL

BLDG #: 1012A
RACK #: R12A18
PANEL #: MADC A/D IO PANEL G

FR SHEET 31

J0	CHAN 32 SPARE
J1	CHAN 33 SPARE
J2	CHAN 34 SPARE
J3	CHAN 35 SPARE

TO SHEET XX

MADC MUX A/D IO PANEL

BLDG #: 1012A
RACK #: R12A19
PANEL #: MADC A/D IO PANEL D

FR SHEET 17

J0	CHAN 48 SPARE
J1	CHAN 49 SPARE
J2	CHAN 50 SPARE
J3	CHAN 51 SPARE
J4	CHAN 52 SPARE
J5	CHAN 53 SPARE
J6	CHAN 54 SPARE
J7	CHAN 55 SPARE
J8	CHAN 56 SPARE
J9	CHAN 57 SPARE
J10	CHAN 58 SPARE
J11	CHAN 59 SPARE
J12	CHAN 60 SPARE
J13	CHAN 61 SPARE
J14	CHAN 62 SPARE
J15	CHAN 63 SPARE

MADC MUX A/D IO PANEL

BLDG #: 1012A
RACK #: R12A19
PANEL #: MADC A/D IO PANEL C

FR SHEET17

J8	CHAN 40 SPARE
J9	CHAN 41 SPARE
J10	CHAN 42 SPARE
J11	CHAN 43 SPARE

TO SHEET 18

MADC MUX A/D IO PANEL

BLDG #: 1012A
RACK #: R12A19
PANEL #: MADC A/D IO PANEL G

FR SHEET 31

J0	CHAN 32 SPARE
J1	CHAN 33 SPARE
J2	CHAN 34 SPARE
J3	CHAN 35 SPARE
J4	CHAN 36 SPARE
J5	CHAN 37 SPARE
J6	CHAN 38 SPARE
J7	CHAN 39 SPARE
J8	CHAN 40 SPARE
J9	CHAN 41 SPARE
J10	CHAN 42 SPARE

TO SHEET 14

-3	-2	-1	REF DESIGNATOR	ITEM NO.	DESCRIPTION	MAT'L DWG NO.,BNL NO.
QTY REQD						

INTERPRET IN GENERAL ACCORDANCE WITH ASME Y14.24M-1989

UNLESS OTHERWISE SPECIFIED DIMENSIONS ARE IN INCHES

DECIMAL TOLERANCES
.X ±.030
.XX ±.015
.XXX ±.005
ANGULAR TOLERANCE
± .5°

NA FINISH

BREAK SHARP EDGES
MAX. XX MIN. XX

OUTSTANDING ECN

Q.A. CATEGORY A-3		DATE
DRAWN BY	Ed Koropsak	6/29/98
CHECKED BY		
DESIGN APPROVAL		
ENGINEER APPROVAL	R.MICHNOFF	6/29/98
SUPVR. APPROVAL		
NEXT ASSEMBLY		

BROOKHAVEN NATIONAL LABORATORY
UPTON, N.Y. 11973

RHIC CONTROLS WIRING DIAGRAM

BLDG. 1012A

SPARE MADC CHANNELS

SIZE D | DRAWING NUMBER 94028579 | REV. A

MATERIAL: ——— SCALE: NA WEIGHT: – SHEET 60

*AUTOCAD

REV.	ZONE	ECN NO.	DATE	BY	CKR	APP.

Schoenfeld, Controls 11/20/2003 10:42 AM 8579_61.dwg

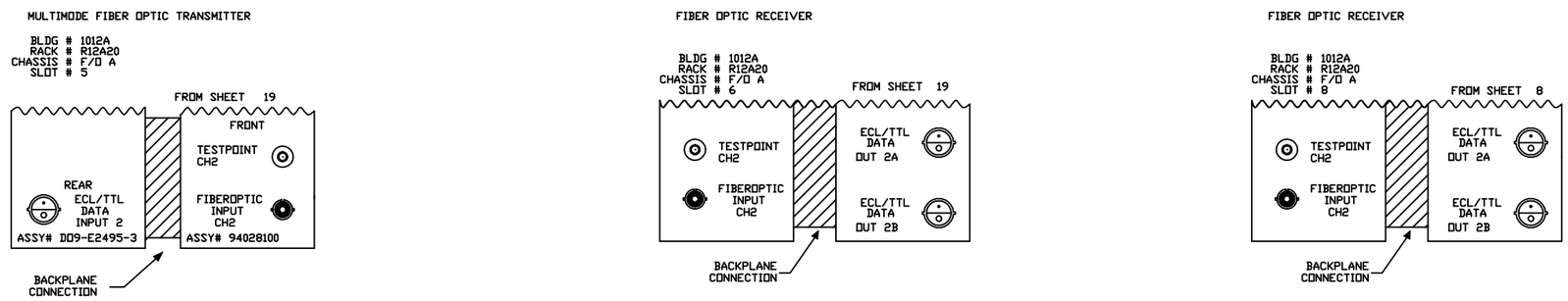

-3	-2	-1	REF DESIGNATOR	ITEM NO.	DESCRIPTION	MAT'L. DWG NO.,SPEC. NO.
QTY REQD						

INTERPRET IN GENERAL ACCORDANCE WITH ASME Y14.24M-1989

UNLESS OTHERWISE SPECIFIED DIMENSIONS ARE IN INCHES

DECIMAL TOLERANCES
.X ±.030
.XX ±.015
.XXX ±.005
ANGULAR TOLERANCE ± .5°

OUTSTANDING ECN

NA FINISH

BREAK SHARP EDGES MAX. XX MIN. XX

Q.A. CATEGORY A-3		DATE
DRAWN BY	Ed Koropsak	6/29/98
CHECKED BY		
DESIGN APPROVAL		
ENGINEER APPROVAL	R. MICHNOFF	6/29/98
SUPVR. APPROVAL		
NEXT ASSEMBLY		

BROOKHAVEN NATIONAL LABORATORY
UPTON, N.Y. 11973

RHIC CONTROLS WIRING DIAGRAM
SERVICE BLDG. 1012A

SPARE F/O RCVR/XMIT CHANNELS

SIZE D | DRAWING NUMBER 94028579 | REV. A

MATERIAL: ——— SCALE: NA WEIGHT: – SHEET 61

*AUTOCAD