REV.	ZONE	ECN NO.	DATE	BY	CKR	APP.

Phil Pape, Controls Division 5/30/2002 2:13 PM WFG_TYP.dwg

TYPICAL BAF WFG SYSTEM

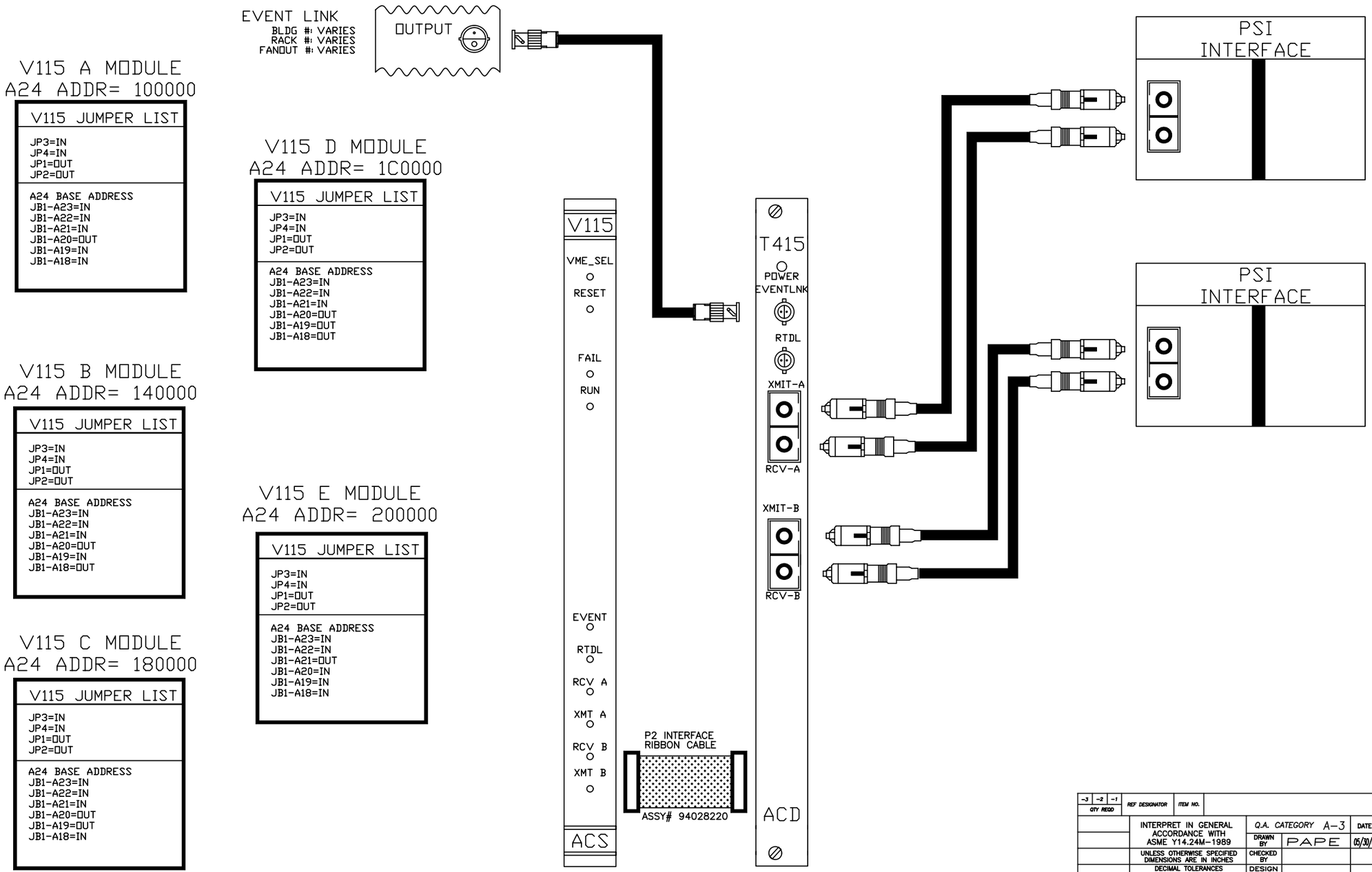

-3	-2	-1	REF DESIGNATOR	ITEM NO.	DESCRIPTION	MAT'L DWG NO._SNL NO.
QTY REQD						

INTERPRET IN GENERAL ACCORDANCE WITH ASME Y14.24M-1989	Q.A. CATEGORY A-3	DATE	BROOKHAVEN NATIONAL LABORATORY
	DRAWN BY PAPE	05/30/02	UPTON, N.Y. 11973
UNLESS OTHERWISE SPECIFIED DIMENSIONS ARE IN INCHES	CHECKED BY		CA- CONTROLS
DECIMAL TOLERANCES .X ±.030 .XX ±.015 .XXX ±.005 ANGULAR TOLERANCE ± .5°	DESIGN APPROVAL		BAF TYPICAL
	ENGINEER APPROVAL		V115, T415 WFG SYSTEM
	SUPVR. APPROVAL		SIZE D — Drawing Number — REV. A
NA FINISH — BREAK SHARP EDGES MAX. XX MIN. XX	NEXT ASSEMBLY		DRAWING NUMBER
OUTSTANDING ECN			MATERIAL: — SCALE: FULL WEIGHT: - SHEET 1 OF 1

*AUTOCAD