C-A Controls Section
Bldg. E10 Wiring Diagrams
BNL Drawing Number

Brookhaven National Laboratory, Upton, New York 11973

Created By: Jason Ortiz
Last Updated 5/19/00

Power Distribution
- 🕮 Rack 5431 (Sheet 1)

SPARES
- 🕮 MADC Channels (Sheet 2)

Serial Links
- 🕮 Event Link (Sheet 3,4)
- 🕮 Real Time Data Link (RTDL) (Sheet 5,6)
- 🕮 Reset Link (Sheet 7)

VME Chassis CST-A10-CORR1 modules
- 🕮 Front End Computer, V108 Utility Module (Sheet 8)
- 🕮 V113/V114 MADC System (Sheet 10)
- 🕮 V115 WFG A:C2-H/C2-V (Sheet 11)
- 🕮 V115 WFG B: C8-H/C8-V (Sheet 12)
- 🕮 V115 WFG C: C12-H/C12-V (Sheet 13)
- 🕮 V115 WFG D: C18-H/C18-V(Sheet 14)
- 🕮 V115 WFG E: D2-H/D2-V(Sheet 15)
- 🕮 V115 WFG F: D8-H/D8-V(Sheet 16)
- 🕮 V115 WFG G: D12-H/D12-V(Sheet 17)
- 🕮 V115 WFG H: D18-H/D18-V(Sheeet 18)
- 🕮 V115 WFG I: E2-H/E2-V(Sheet 19)

VME Chassis CST-A10-CORR2
- 🕮 Front End Computer, V108 Utility Module (Sheet 9)
- 🕮 V113/V114 MADC System (Sheet 10)
- 🕮 ALLEN BRADLEY PLC System (Sheet 32)
- 🕮 V115 WFG A: E8-H/E8-V(Sheet 20)
- 🕮 V115 WFG B: E12-H/E12-V(Sheet 21)
- 🕮 V115 WFG C: E18-H/E18-V(Sheet 22)
- 🕮 V115 WFG D: F2-H/F2-V(Sheet 23)
- 🕮 V115 WFG E: F8-H/F8-V(Sheet 24)
- 🕮 V115 WFG F: F12-H/F12-V(Sheet 25)
- 🕮 V115 WFG G: F18-H/F18-V(Sheet 26)
- 🕮 V115 WFG H: SPARE 1/SPARE 2(Sheet 27)
- 🕮 V115 WFG I: D19_OCT/F10BMP(Sheet 28)
- 🕮 V115 WFG J: D16_OCT/D9_OCT(Sheet 29)
- 🕮 V115 WFG K: SPARE OCTUPOLE(Sheet 30)
- 🕮 V115 WFG L: Future P/S(Sheet 31)

NOTE:

C-A Controls, Brookhaven National Laboratory 5/18/00 2:57 PM A10PD.dwg

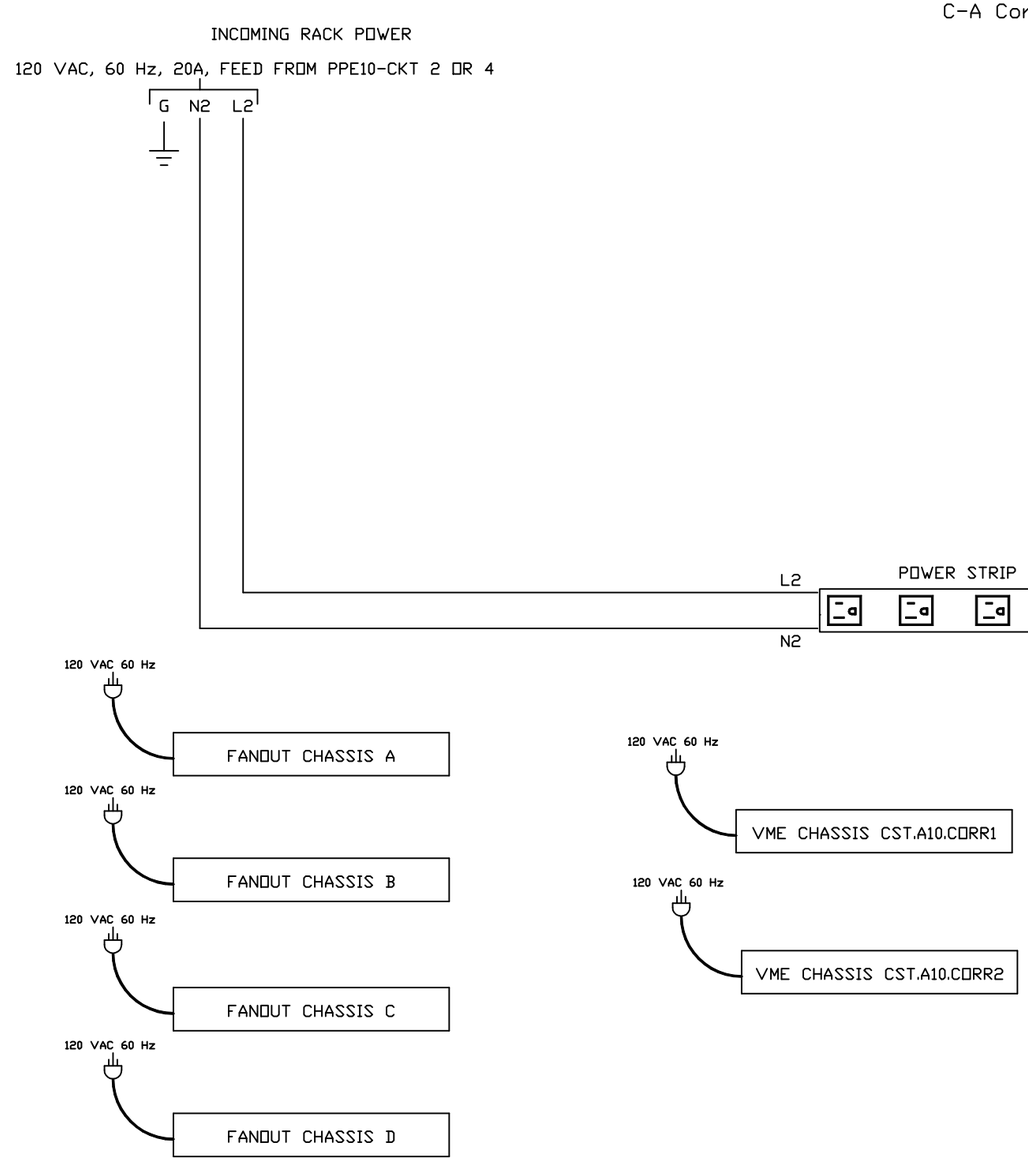

NOTE: ALL 120 VAC, 60 Hz POWER CORDS
PLUG INTO POWER STRIP OUTLETS

RACK 5439

-3	-2	-1	REF DESIGNATOR	ITEM NO.	DESCRIPTION	MAT'L DWG NO./BNL NO.
		7		10	CABLE ASSY, LOW RES PS IF MODULE TO POWER SUPPLY	
		-		9		
		30		8	SERIAL LINK TWINAX CABLE, LENGTH AS REQUIRED	94028176
		24		7	SERIAL LINK TWINAX CABLE, 1 FT	94028176
		24		6	DUPLEX MULTIMODE FIBER OPTIC CABLE, T115 TO LOW RES PS INTERFACE MODULE	94028249
		5		5	SINGLE MODE FIBER OPTIC CABLE	94028251
		8		4	MADC A/D I/O CABLE	94028216
		12		3	TRANSITION MODULE P2 RIBBON CABLE, V115, V120	94028159
		2		2	MADC V113 TO V114 P2 INTERFACE RIBBON CABLE	94028218
		3		1	NETWORK CABLE TO FEC	

QTY REQD

INTERPRET IN GENERAL ACCORDANCE WITH ASME Y14.24M-1989

UNLESS OTHERWISE SPECIFIED DIMENSIONS ARE IN INCHES

DECIMAL TOLERANCES
.X ±.030
.XX ±.015
.XXX ±.005
ANGULAR TOLERANCE
± .5°

NA FINISH

BREAK SHARP EDGES
MAX. XX MIN. XX

OUTSTANDING ECN

Q.A. CATEGORY A-3

		DATE
DRAWN BY	JASON ORTIZ	5/18/00
CHECKED BY		
DESIGN APPROVAL		
ENGINEER APPROVAL		
SUPVR. APPROVAL		

NEXT ASSEMBLY

BROOKHAVEN NATIONAL LABORATORY
UPTON, N.Y. 11973

C-A CONTROLS WIRING DIAGRAM
BLDG. E10, RACK 5439
POWER DISTRIBUTION

SIZE
DRAWING NUMBER
REV. A

MATERIAL: ——— SCALE: NA WEIGHT: - SHEET 1 OF 32

*AUTOCAD

REV.	ZONE	ECN NO.	DATE	BY	CKR	APP.

C-A Controls, Brookhaven National Laboratory 5/12/00 11:25 AM SPREMADCE10.dwg

MADC MUX A/D IO PANEL

BLDG #: E10
RACK #: 5431
PANEL #: MADC A/D IO PANEL E

FR SHEET XX

J10	CHAN A SPARE I RDBK XXXX
J11	CHAN B SPARE I RDBK XXXX
J12	CHAN C SPARE I RDBK XXXX
J13	CHAN D SPARE I RDBK XXXX
J14	CHAN E SPARE I RDBK XXXX
J15	CHAN F SPARE I RDBK XXXX

TO SHEET XX

MADC MUX A/D IO PANEL

BLDG #: E10
RACK #: 5431
PANEL #: MADC A/D IO PANEL F

FR SHEET XX

J0	CHAN A SPARE I RDBK XXXX
J1	CHAN B SPARE I RDBK XXXX
J2	CHAN C SPARE I RDBK XXXX
J3	CHAN D SPARE I RDBK XXXX
J4	CHAN E SPARE I RDBK XXXX
J5	CHAN F SPARE I RDBK XXXX
J6	CHAN E SPARE I RDBK XXXX
J7	CHAN F SPARE I RDBK XXXX
J8	SPARE I RDBK XXXX
J9	CHAN B SPARE I RDBK XXXX
J10	CHAN C SPARE I RDBK XXXX
J11	CHAN D SPARE I RDBK XXXX
J12	CHAN E SPARE I RDBK XXXX
J13	CHAN F SPARE I RDBK XXXX
J14	CHAN E SPARE IRDBK XXXX
J15	CHAN F SPARE I RDBK XXXX

TO SHEET XX

MADC MUX A/D IO PANEL

BLDG #: E10
RACK #: 5431
PANEL #: MADC A/D IO PANEL G

FR SHEET XX

J10	CHAN A SPARE IREF XXXX
J11	CHAN B SPARE I REF XXXX
J12	CHAN C SPARE I REF XXXX
J13	CHAN D SPARE I REF XXXX
J14	CHAN E SPARE I REF XXXX
J15	CHAN F SPARE I REF XXXX

TO SHEET XX

MADC MUX A/D IO PANEL

BLDG #: E10
RACK #: 5431
PANEL #: MADC A/D IO PANEL H

FR SHEET XX

J0	CHAN A SPARE I RDBK XXXX
J1	CHAN B SPARE I RDBK XXXX
J2	CHAN C SPARE I RDBK XXXX
J3	CHAN D SPARE I RDBK XXXX
J4	CHAN E SPARE I RDBK XXXX
J5	CHAN F SPARE I RDBK XXXX
J6	CHAN E SPARE I RDBK XXXX
J7	CHAN F SPARE I RDBK XXXX
J8	SPARE I RDBK XXXX
J9	CHAN B SPARE I RDBK XXXX
J10	CHAN C SPARE I RDBK XXXX
J11	CHAN D SPARE I RDBK XXXX
J12	CHAN E SPARE I RDBK XXXX
J13	CHAN F SPARE I RDBK XXXX
J14	CHAN E SPARE IRDBK XXXX
J15	CHAN F SPARE I RDBK XXXX

TO SHEET XX

-3	-2	-1	REF DESIGNATOR	ITEM NO.	DESCRIPTION	MAT'L DWG NO./BNL NO.
QTY REQD						

INTERPRET IN GENERAL ACCORDANCE WITH ASME Y14.24M-1989

UNLESS OTHERWISE SPECIFIED DIMENSIONS ARE IN INCHES

DECIMAL TOLERANCES
.X ±.030
.XX ±.015
.XXX ±.005
ANGULAR TOLERANCE
± .5°

NA FINISH

BREAK SHARP EDGES
MAX. XX MIN. XX

OUTSTANDING ECN

Q.A. CATEGORY	A-3	DATE
DRAWN BY	JASON ORTIZ	5/12/00
CHECKED BY		
DESIGN APPROVAL		
ENGINEER APPROVAL		
SUPVR. APPROVAL		

NEXT ASSEMBLY

BROOKHAVEN NATIONAL LABORATORY
UPTON, N.Y. 11973

C-A CONTROLS WIRING DIAGRAM

E10 RACK 5431

SPARE MADC

SIZE D | DRAWING NUMBER | REV. A

MATERIAL: ——— SCALE: WEIGHT: – SHEET 2 of 32

*AUTOCAD

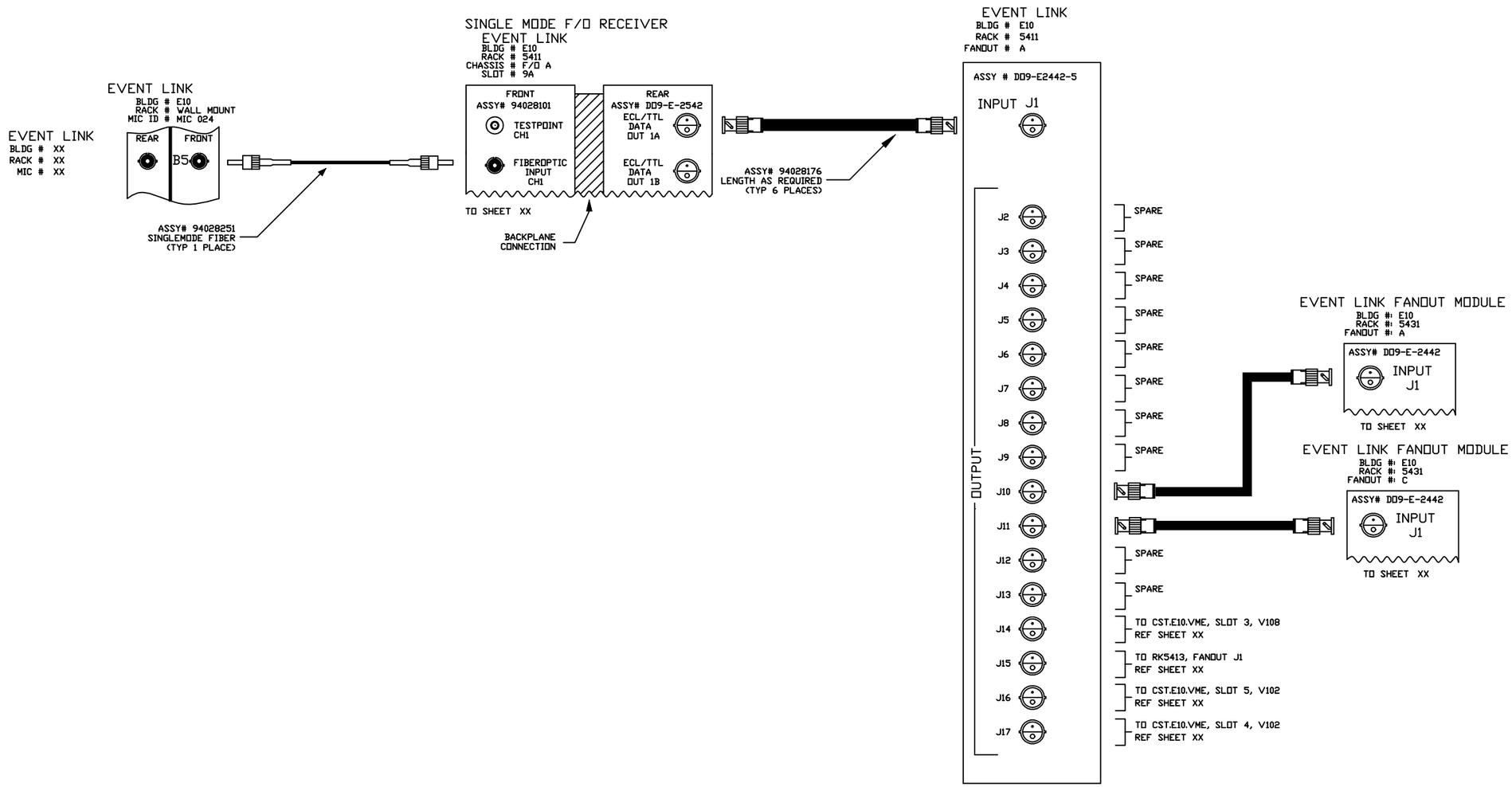

-3	-2	-1	REF DESIGNATOR	ITEM NO.	DESCRIPTION	MAT'L. DWG NO.,BNL NO.
QTY REQD						

INTERPRET IN GENERAL ACCORDANCE WITH ASME Y14.24M-1989

UNLESS OTHERWISE SPECIFIED DIMENSIONS ARE IN INCHES

DECIMAL TOLERANCES
.X ±.030
.XX ±.015
.XXX ±.005
ANGULAR TOLERANCE
± .5°

OUTSTANDING ECN

NA FINISH

BREAK SHARP EDGES
MAX. XX MIN. XX

Q.A. CATEGORY A-3		DATE	BROOKHAVEN NATIONAL LABORATORY
DRAWN BY	JASON ORTIZ	5/15/00	UPTON, N.Y. 11973
CHECKED BY			C-A CONTROLS WIRING DIAGRAM
DESIGN APPROVAL			E10
ENGINEER APPROVAL			EVENT LINK
SUPVR. APPROVAL			SIZE / REV. A
NEXT ASSEMBLY			DRAWING NUMBER

MATERIAL: ——— SCALE: NA WEIGHT: – SHEET 3 of 32

*AUTOCAD

REV.	ZONE	ECN NO.	DATE	BY	CKR	APP.

EVENT LINK FANOUT MODULE

BLDG # E10
RACK # 5431
FANOUT # A

FROM SHEET X
ASSY # DD9-E2442-5

OUTPUT

J2	TO CST-E10-CORR1, SLOT 17, VII5 REF SHEET XX
J3	TO CST-E10-CORR1, SLOT 16, VII5 REF SHEET XX
J4	TO CST-E10-CORR1, SLOT 15, VII5 REF SHEET XX
J5	TO CST-E10-CORR1, SLOT 14, VII5 REF SHEET XX
J6	TO CST-E10-CORR1, SLOT 13, VII5 REF SHEET XX
J7	TO CST-E10-CORR1, SLOT 12, VII5 REF SHEET XX
J8	TO CST-E10-CORR1, SLOT 11, VII5 REF SHEET XX
J9	TO CST-E10-CORR1, SLOT 10, VII5 REF SHEET XX
J10	TO CST-E10-CORR1, SLOT 9, VII5 REF SHEET XX
J11	TO CST-E10-CORR1, SLOT 3, V108 REF SHEET XX
J12	TO CST-E10-CORR1, SLOT 5, V113 REF SHEET XX
J13	SPARE
J14	SPARE
J15	SPARE
J16	SPARE
J17	SPARE

EVENT LINK FANOUT MODULE

BLDG # E10
RACK # 5431
FANOUT # C

FROM SHEET XX
ASSY # DD9-E2442-5

OUTPUT

J2	TO CST-E10-CORR2, SLOT 18, VII5 REF SHEET XX
J3	TO CST-E10-CORR2, SLOT 17, VII5 REF SHEET XX
J4	TO CST-E10-CORR2, SLOT 16, VII5 REF SHEET
J5	TO CST-E10-CORR2, SLOT 15, VII5 REF SHEET
J6	TO CST-E10-CORR2, SLOT 14, VII5 REF SHEET XX
J7	TO CST-E10-CORR2, SLOT 13, VII5 REF SHEET
J8	TO CST-E10-CORR2, SLOT 12, VII5 REF SHEET
J9	TO CST-E10-CORR2, SLOT 11, VII5 REF SHEET
J10	TO CST-E10-CORR2, SLOT 10, VII5 REF SHEET
J11	TO CST-E10-CORR2, SLOT 9, VII5 REF SHEET
J12	TO CST-E10-CORR2, SLOT 8, VII5 REF SHEET
J13	TO CST-E10-CORR2, SLOT 7, VII5 REF SHEET
J14	TO CST-E10-CORR2, SLOT 4, VII3 REF SHEET
J15	TO CST-E10-CORR2, SLOT 4, V108 REF SHEET
J16	SPARE
J17	SPARE

-3	-2	-1	REF DESIGNATOR	ITEM NO.	DESCRIPTION	MAT'L. DWG NO.,BNL NO.
QTY REQD						

INTERPRET IN GENERAL ACCORDANCE WITH ASME Y14.24M-1989
UNLESS OTHERWISE SPECIFIED DIMENSIONS ARE IN INCHES
DECIMAL TOLERANCES .X ±.030 .XX ±.015 .XXX ±.005
ANGULAR TOLERANCE ± .5°
NA FINISH
BREAK SHARP EDGES MAX. XX MIN. XX
OUTSTANDING ECN

Q.A. CATEGORY A-3		DATE	BROOKHAVEN NATIONAL LABORATORY
DRAWN BY	JASON ORTIZ	5/12/00	UPTON, N.Y. 11973
CHECKED BY			C-A CONTROLS WIRING DIAGRAM
DESIGN APPROVAL			E10
ENGINEER APPROVAL			EVENT LINK
SUPVR. APPROVAL			SIZE / REV. A
NEXT ASSEMBLY			DRAWING NUMBER

MATERIAL: ——— SCALE: NA WEIGHT: – SHEET 4 of 32

*AUTOCAD

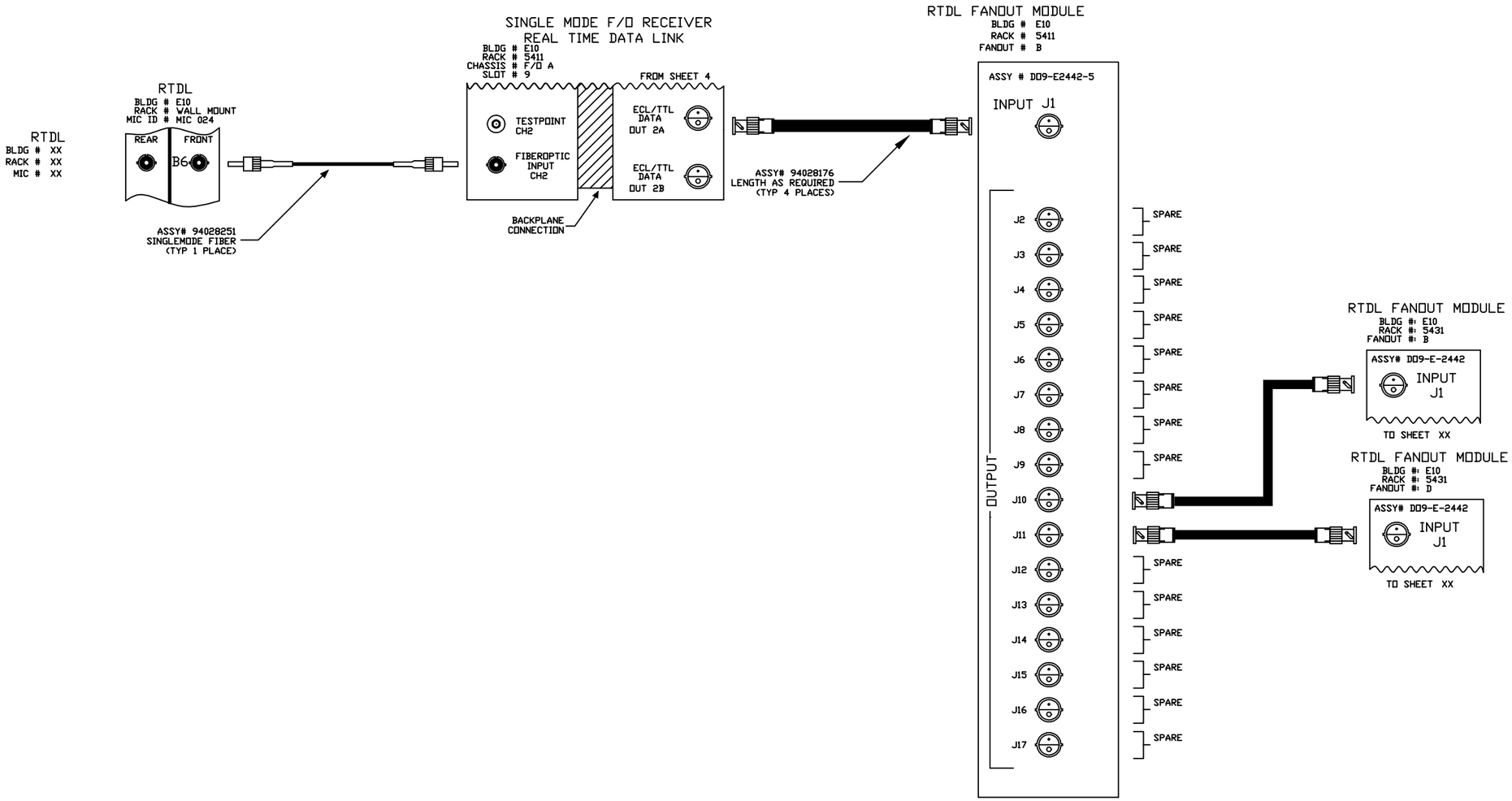

-3	-2	-1	REF DESIGNATOR	ITEM NO.	DESCRIPTION	MAT'L. DWG NO.,SPEC. NO.
QTY REQD						

INTERPRET IN GENERAL ACCORDANCE WITH ASME Y14.24M-1989

UNLESS OTHERWISE SPECIFIED DIMENSIONS ARE IN INCHES

DECIMAL TOLERANCES
.X ±.030
.XX ±.015
.XXX ±.005
ANGULAR TOLERANCE
± .5°

OUTSTANDING ECN

NA FINISH

BREAK SHARP EDGES
MAX. XX MIN. XX

Q.A. CATEGORY A-3

		DATE
DRAWN BY	JASON ORTIZ	5/15/00
CHECKED BY		
DESIGN APPROVAL		
ENGINEER APPROVAL		
SUPVR. APPROVAL		

NEXT ASSEMBLY

BROOKHAVEN NATIONAL LABORATORY
UPTON, N.Y. 11973

C-A CONTROLS WIRING DIAGRAM

E10

REAL TIME DATA LINK

SIZE

DRAWING NUMBER

REV. A

MATERIAL: ——— SCALE: NA WEIGHT: – SHEET 5 of 32

*AUTOCAD

REV.	ZONE	ECN NO.	DATE	BY	CKR	APP.

RTDL FANOUT MODULE

BLDG # E10
RACK # 5431
FANOUT # B

FROM SHEET XX
ASSY # DD9-E2442-5

OUTPUT

J2	TO CST-E10-CORR1, SLOT 17, V115 REF SHEET XX
J3	TO CST-E10-CORR1, SLOT 16, V115 REF SHEET XX
J4	TO CST-E10-CORR1, SLOT 15, V115 REF SHEET XX
J5	TO CST-E10-CORR1, SLOT 14, V115 REF SHEET XX
J6	TO CST-E10-CORR1, SLOT 13, V115 REF SHEET XX
J7	TO CST-E10-CORR1, SLOT 12, V115 REF SHEET XX
J8	TO CST-E10-CORR1, SLOT 11, V115 REF SHEET XX
J9	TO CST-E10-CORR1, SLOT 10, V115 REF SHEET XX
J10	TO CST-E10-CORR1, SLOT 9, V115 REF SHEET XX
J11	SPARE
J12	SPARE
J13	SPARE
J14	SPARE
J15	SPARE
J16	SPARE
J17	SPARE

RTDL FANOUT MODULE

BLDG # E10
RACK # 5431
FANOUT # D

FROM SHEET XX
ASSY # DD9-E2442-5

OUTPUT

J2	TO CST-E10-CORR2, SLOT 18, V115 REF SHEET XX
J3	TO CST-E10-CORR2, SLOT 17, V115 REF SHEET XX
J4	TO CST-E10-CORR2, SLOT 16, V115 REF SHEET XX
J5	TO CST-E10-CORR2, SLOT 15, V115 REF SHEET XX
J6	TO CST-E10-CORR2, SLOT 14, V115 REF SHEET XX
J7	TO CST-E10-CORR2, SLOT 13, V115 REF SHEET XX
J8	TO CST-E10-CORR2, SLOT 12, V115 REF SHEET XX
J9	TO CST-E10-CORR2, SLOT 11, V115 REF SHEET XX
J10	TO CST-E10-CORR2, SLOT 10, V115 REF SHEET XX
J11	TO CST-E10-CORR2, SLOT 9, V115 REF SHEET XX
J12	TO CST-E10-CORR2, SLOT 8, V115 REF SHEET XXREF SHEET 25
J13	TO CST-E10-CORR2, SLOT 7, V115 REF SHEET XX
J14	TO CST-E10-CORR1, SLOT 3, V108 REF SHEET XX
J15	TO CST-E10-CORR2, SLOT 3, V108 REF SHEET XX
J16	SPARE
J17	SPARE

-3	-2	-1	REF DESIGNATOR	ITEM NO.	DESCRIPTION	MAT'L. DWG NO.,BNL NO.
QTY REQD						

INTERPRET IN GENERAL ACCORDANCE WITH ASME Y14.24M-1989

UNLESS OTHERWISE SPECIFIED DIMENSIONS ARE IN INCHES

DECIMAL TOLERANCES
.X ±.030
.XX ±.015
.XXX ±.005
ANGULAR TOLERANCE ± .5°

OUTSTANDING ECN

NA FINISH

BREAK SHARP EDGES MAX. XX MIN. XX

Q.A. CATEGORY A-3		DATE
DRAWN BY	JASON ORTIZ	5/15/00
CHECKED BY		
DESIGN APPROVAL		
ENGINEER APPROVAL		
SUPVR. APPROVAL		

NEXT ASSEMBLY

BROOKHAVEN NATIONAL LABORATORY
UPTON, N.Y. 11973

C-A CONTROLS WIRING DIAGRAM

E10

REAL TIME DATA LINK

SIZE

DRAWING NUMBER

REV. A

MATERIAL: ——— SCALE: NA WEIGHT: – SHEET 6 of 32

*AUTOCAD

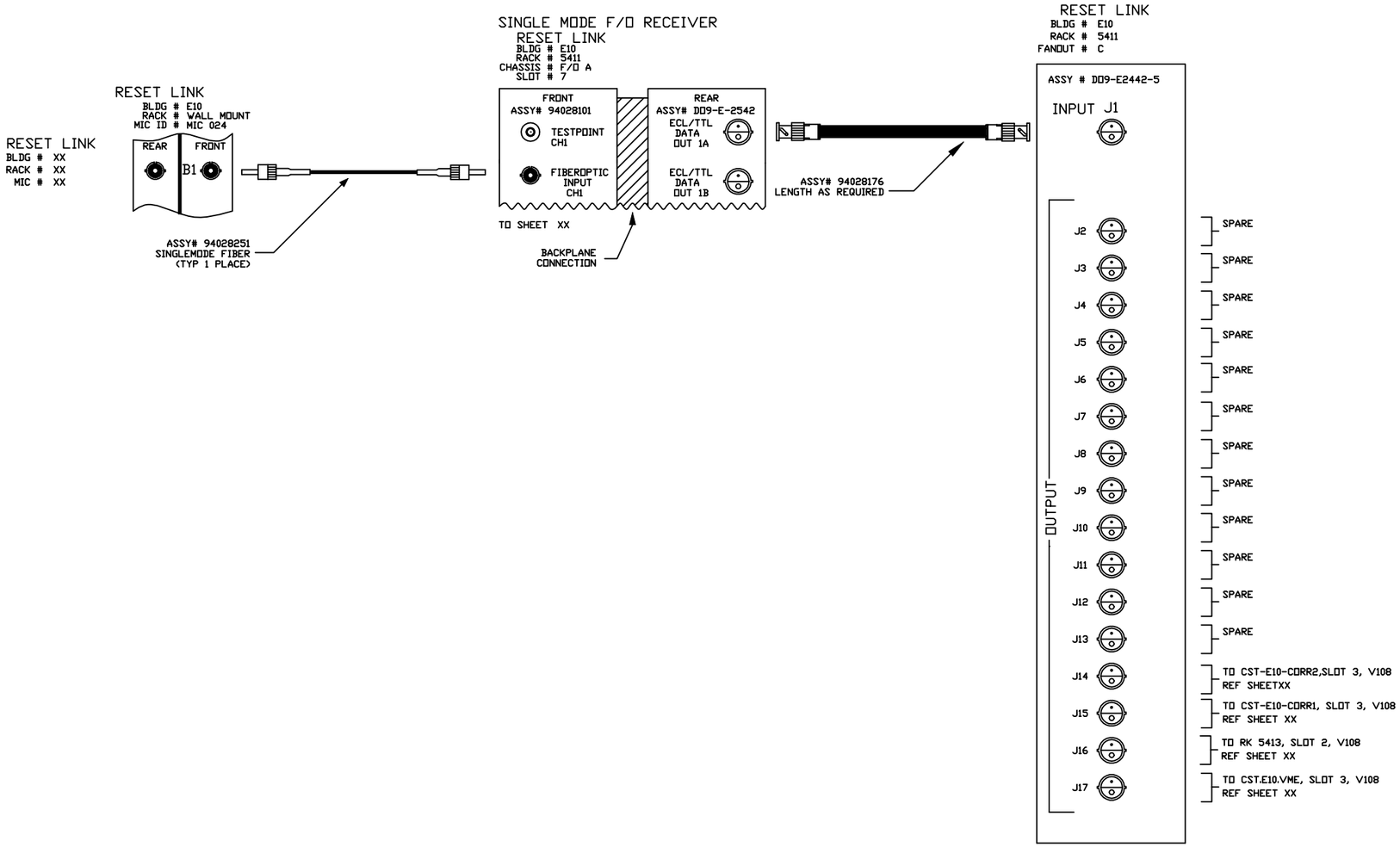

REV.	ZONE	ECN NO.	DATE	BY	CKR	APP.

-3	-2	-1	REF DESIGNATOR	ITEM NO.	DESCRIPTION	MAT'L. DWG NO./INL NO.
QTY REQD						

INTERPRET IN GENERAL ACCORDANCE WITH ASME Y14.24M-1989

UNLESS OTHERWISE SPECIFIED DIMENSIONS ARE IN INCHES

DECIMAL TOLERANCES
.X ±.030
.XX ±.015
.XXX ±.005
ANGULAR TOLERANCE
± .5°

NA FINISH

BREAK SHARP EDGES
MAX. XX MIN. XX

OUTSTANDING ECN

Q.A. CATEGORY A-3

		DATE
DRAWN BY	JASON ORTIZ	5/15/00
CHECKED BY		
DESIGN APPROVAL		
ENGINEER APPROVAL		
SUPVR. APPROVAL		

NEXT ASSEMBLY

BROOKHAVEN NATIONAL LABORATORY
UPTON, N.Y. 11973

C-A CONTROLS WIRING DIAGRAM

E10

RESET LINK

SIZE | DRAWING NUMBER | REV. A

MATERIAL: ——— SCALE: NA WEIGHT: – SHEET 7 of 32

*AUTOCAD

REV.	ZONE	ECN NO.	DATE	BY	CKR	APP.

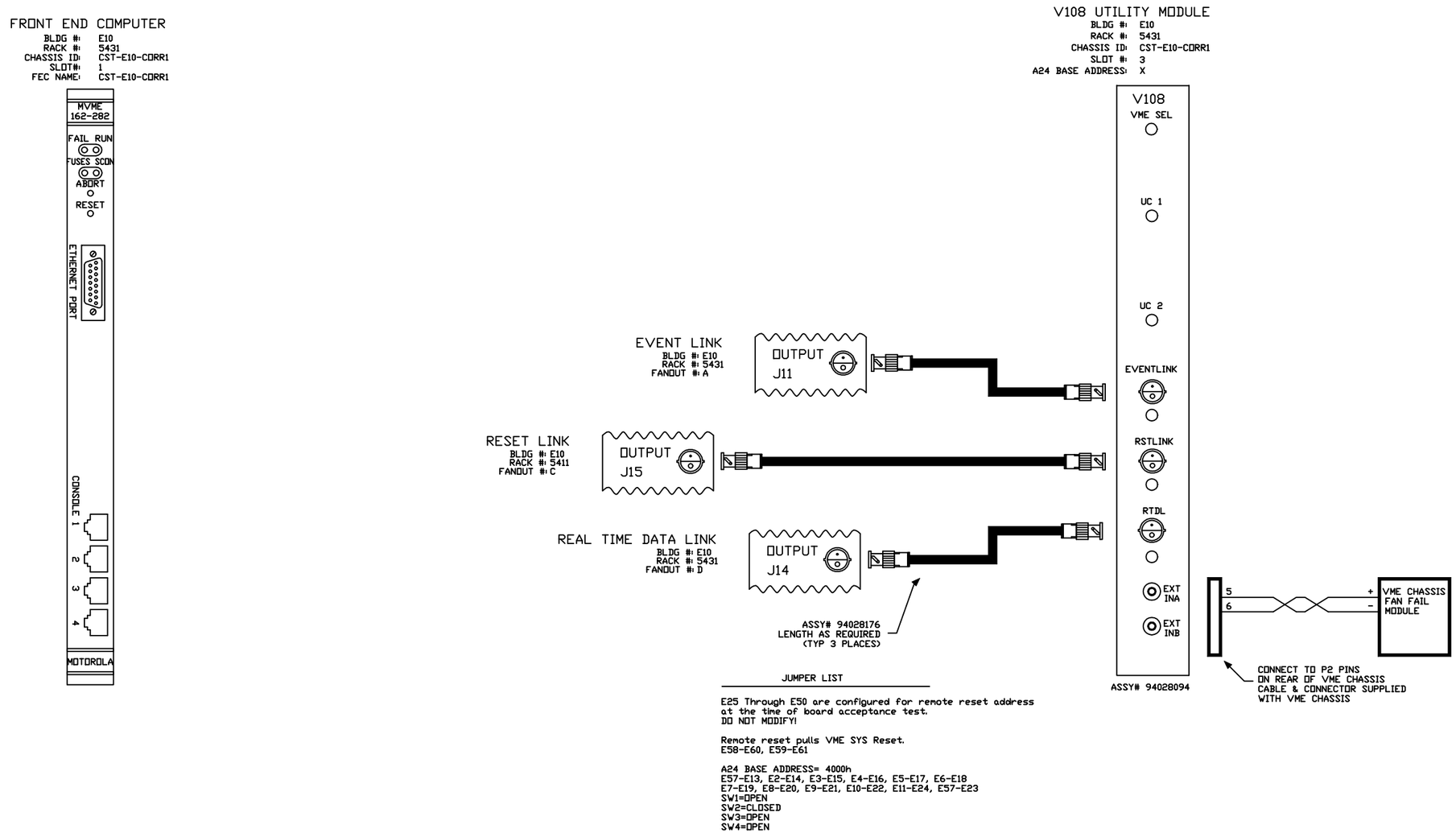

JUMPER LIST

E25 Through E50 are configured for remote reset address at the time of board acceptance test.
DO NOT MODIFY!

Remote reset pulls VME SYS Reset.
E58-E60, E59-E61

A24 BASE ADDRESS= 4000h
E57-E13, E2-E14, E3-E15, E4-E16, E5-E17, E6-E18
E7-E19, E8-E20, E9-E21, E10-E22, E11-E24, E57-E23
SW1=OPEN
SW2=CLOSED
SW3=OPEN
SW4=OPEN

-3	-2	-1	REF DESIGNATOR	ITEM NO.	DESCRIPTION	MAT'L DWG NO./BNL NO.
QTY REQD						

INTERPRET IN GENERAL ACCORDANCE WITH ASME Y14.24M-1989

UNLESS OTHERWISE SPECIFIED DIMENSIONS ARE IN INCHES

DECIMAL TOLERANCES
.X ±.030
.XX ±.015
.XXX ±.005
ANGULAR TOLERANCE
± .5°

NA FINISH

BREAK SHARP EDGES
MAX. XX MIN. XX

OUTSTANDING ECN

Q.A. CATEGORY A-3

		DATE
DRAWN BY	JASON ORTIZ	5/12/00
CHECKED BY		
DESIGN APPROVAL		
ENGINEER APPROVAL		
SUPVR. APPROVAL		

NEXT ASSEMBLY

BROOKHAVEN NATIONAL LABORATORY
UPTON, N.Y. 11973

CONTROLS WIRING DIAGRAM
BLDG. E10, VME CHASSIS CST-E10-CORR1
FT END COMP/V108 UTIL MODULE

SIZE D
DRAWING NUMBER
REV. A

MATERIAL: ——— SCALE: NA WEIGHT: — SHEET 8 of 32

*AUTOCAD

REV.	ZONE	ECN NO.	DATE	BY	CKR	APP.

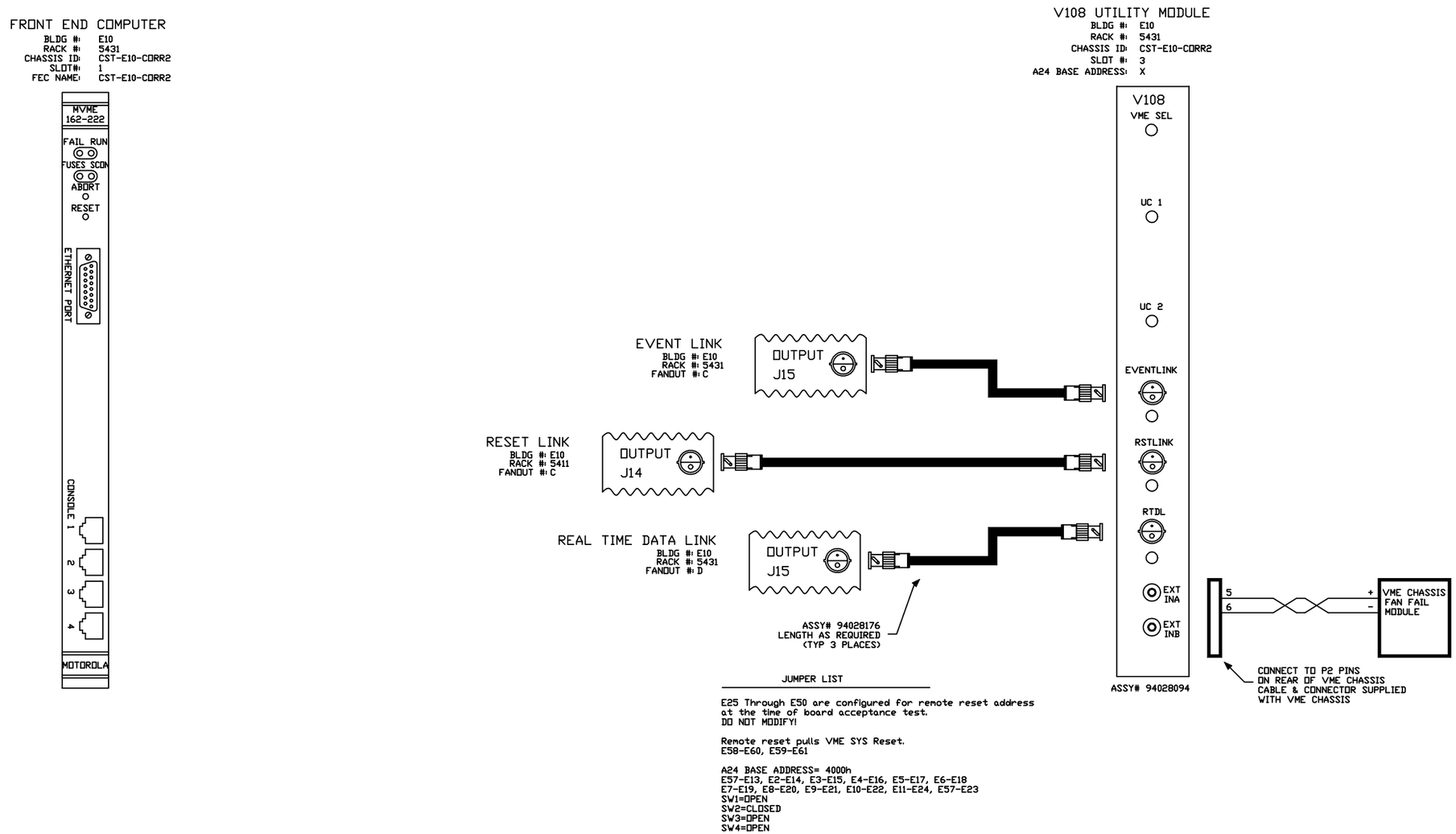

JUMPER LIST

E25 Through E50 are configured for remote reset address at the time of board acceptance test.
DO NOT MODIFY!

Remote reset pulls VME SYS Reset.
E58-E60, E59-E61

A24 BASE ADDRESS= 4000h
E57-E13, E2-E14, E3-E15, E4-E16, E5-E17, E6-E18
E7-E19, E8-E20, E9-E21, E10-E22, E11-E24, E57-E23
SW1=OPEN
SW2=CLOSED
SW3=OPEN
SW4=OPEN

-3	-2	-1	REF DESIGNATOR	ITEM NO.	DESCRIPTION	MAT'L DWG NO./BNL NO.
QTY REQD						

INTERPRET IN GENERAL ACCORDANCE WITH ASME Y14.24M-1989

UNLESS OTHERWISE SPECIFIED DIMENSIONS ARE IN INCHES

DECIMAL TOLERANCES
.X ±.030
.XX ±.015
.XXX ±.005
ANGULAR TOLERANCE ± .5°

NA FINISH

BREAK SHARP EDGES MAX. XX MIN. XX

OUTSTANDING ECN

Q.A. CATEGORY A-3		DATE
DRAWN BY	JASON ORTIZ	5/12/00
CHECKED BY		
DESIGN APPROVAL		
ENGINEER APPROVAL		
SUPVR. APPROVAL		

NEXT ASSEMBLY

BROOKHAVEN NATIONAL LABORATORY
UPTON, N.Y. 11973

CONTROLS WIRING DIAGRAM

BLDG. E10, VME CHASSIS CST-E10-CORR2

FT END COMP/V108 UTIL MODULE

SIZE D | DRAWING NUMBER | REV. A

MATERIAL: ——— SCALE: NA WEIGHT: – SHEET 9 of 32

*AUTOCAD

C-A Controls, Brookhaven National Laboratory 5/18/00 10:22 AM madcE10.dwg

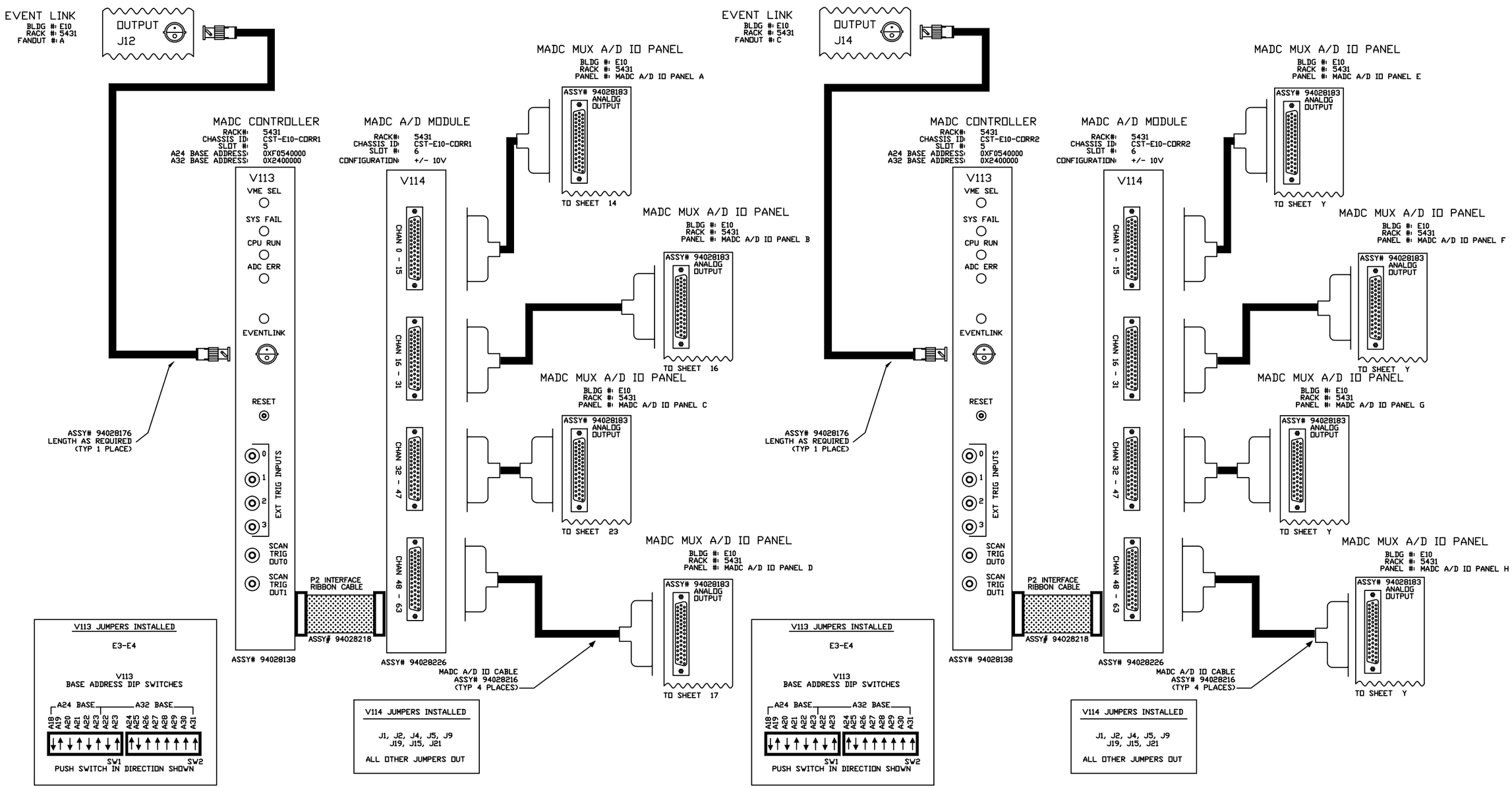

REV.	ZONE	ECN NO.	DATE	BY	CKR	APP.

-3	-2	-1	REF DESIGNATOR	ITEM NO.	DESCRIPTION	MAT'L DWG NO./BHL NO.
QTY REQD						

INTERPRET IN GENERAL ACCORDANCE WITH ASME Y14.24M-1989

UNLESS OTHERWISE SPECIFIED DIMENSIONS ARE IN INCHES

DECIMAL TOLERANCES
.X ±.030
.XX ±.015
.XXX ±.005
ANGULAR TOLERANCE
± .5°

NA FINISH

BREAK SHARP EDGES
MAX. XX MIN. XX

OUTSTANDING ECN

Q.A. CATEGORY A-3

		DATE
DRAWN BY	JASON ORTIZ	5/15/00
CHECKED BY		
DESIGN APPROVAL		
ENGINEER APPROVAL		
SUPVR. APPROVAL		

NEXT ASSEMBLY

BROOKHAVEN NATIONAL LABORATORY
UPTON, N.Y. 11973

C-A CONTROLS WIRING DIAGRAM

E10, VME CHASSIS CST-E10-CORR1/CORR2

MADC SYSTEM

SIZE

DRAWING NUMBER

REV. A

MATERIAL: ——— SCALE: NA WEIGHT: – SHEET 10 of 32

1 *AUTOCAD

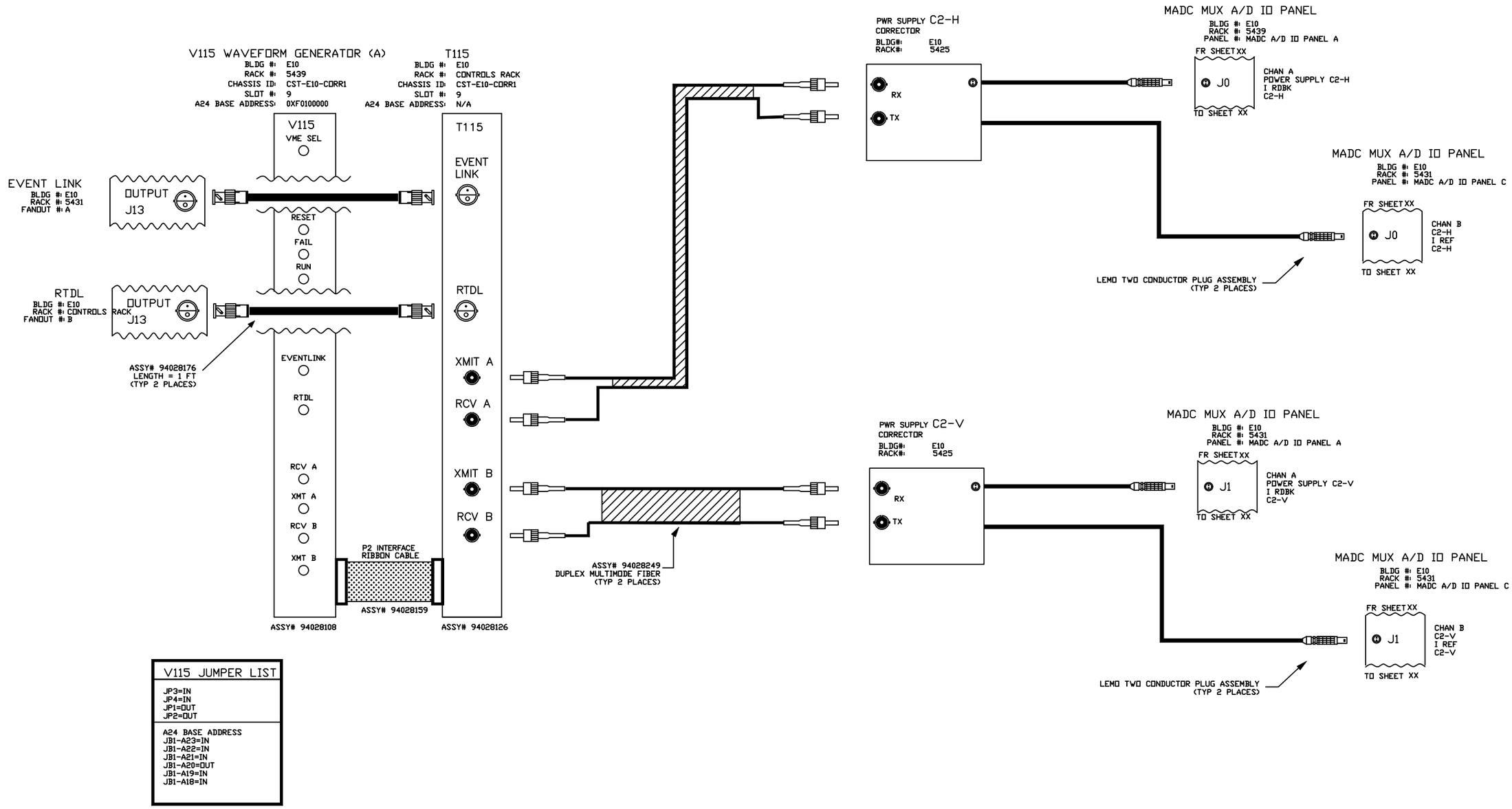

V115 JUMPER LIST
JP3=IN JP4=IN JP1=OUT JP2=OUT
A24 BASE ADDRESS JB1-A23=IN JB1-A22=IN JB1-A21=IN JB1-A20=OUT JB1-A19=IN JB1-A18=IN

-3	-2	-1	REF DESIGNATOR	ITEM NO.	DESCRIPTION	MAT'L DWG NO./BNL NO.
QTY REQD						

INTERPRET IN GENERAL ACCORDANCE WITH ASME Y14.24M-1989

UNLESS OTHERWISE SPECIFIED DIMENSIONS ARE IN INCHES

DECIMAL TOLERANCES
.X ±.030
.XX ±.015
.XXX ±.005
ANGULAR TOLERANCE
± .5°

NA FINISH

BREAK SHARP EDGES
MAX. XX MIN. XX

OUTSTANDING ECN

Q.A. CATEGORY A-3

		DATE
DRAWN BY	JASON ORTIZ	5/9/00
CHECKED BY		
DESIGN APPROVAL		
ENGINEER APPROVAL		
SUPVR. APPROVAL		

NEXT ASSEMBLY

BROOKHAVEN NATIONAL LABORATORY
UPTON, N.Y. 11973

C-A CONTROLS WIRING DIAGRAM

E10 CST-A10-CORR1

POWER SUPPLY C2-H/C2-V

SIZE D | DRAWING NUMBER | REV. A

MATERIAL: ——— SCALE: NA WEIGHT: – SHEET 11 of32

*AUTOCAD

REV.	ZONE	ECN NO.	DATE	BY	CKR	APP.

C-A Controls, Brookhaven National Laboratory 5/15/00 4:13 PM E10wfg2A.dwg

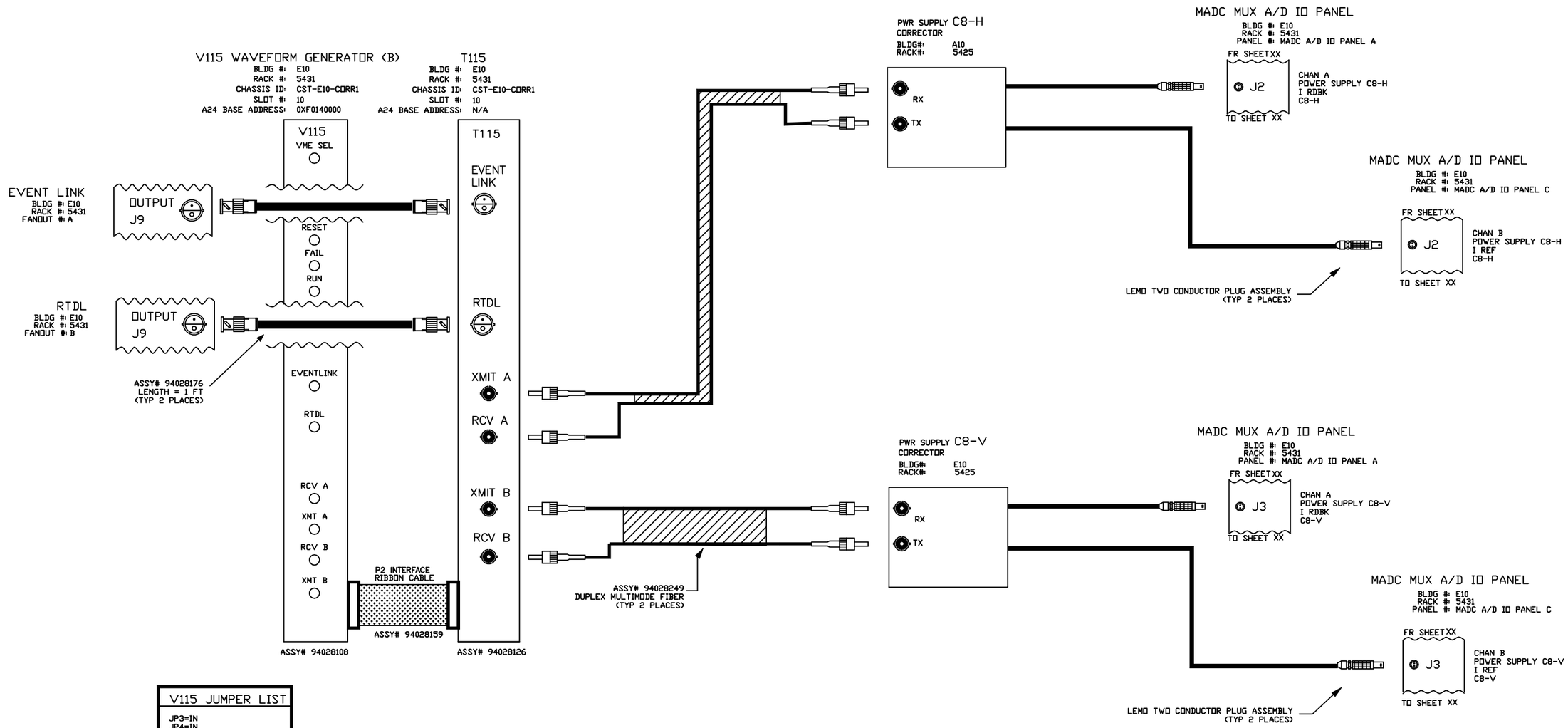

V115 JUMPER LIST
JP3=IN JP4=IN JP1=OUT JP2=OUT
A24 BASE ADDRESS JB1-A23=IN JB1-A22=IN JB1-A21=IN JB1-A20=OUT JB1-A19=IN JB1-A18=OUT

-3	-2	-1	REF DESIGNATOR	ITEM NO.	DESCRIPTION	MAT'L DWG NO./BNL NO.
QTY REQD						

INTERPRET IN GENERAL ACCORDANCE WITH ASME Y14.24M-1989

UNLESS OTHERWISE SPECIFIED DIMENSIONS ARE IN INCHES

DECIMAL TOLERANCES
.X ±.030
.XX ±.015
.XXX ±.005
ANGULAR TOLERANCE
± .5°

NA FINISH

BREAK SHARP EDGES
MAX. XX MIN. XX

OUTSTANDING ECN

Q.A. CATEGORY A-3

		DATE
DRAWN BY	Jason Ortiz	5/9/00
CHECKED BY		
DESIGN APPROVAL		
ENGINEER APPROVAL		
SUPVR. APPROVAL		

NEXT ASSEMBLY

BROOKHAVEN NATIONAL LABORATORY
UPTON, N.Y. 11973

C-A CONTROLS WIRING DIAGRAM

A10, CST-A10-CORR1

POWER SUPPLY C8-H/C8-V

SIZE D | DRAWING NUMBER | REV. A

MATERIAL: ——— SCALE: NA WEIGHT: – SHEET 12 of 32

*AUTOCAD

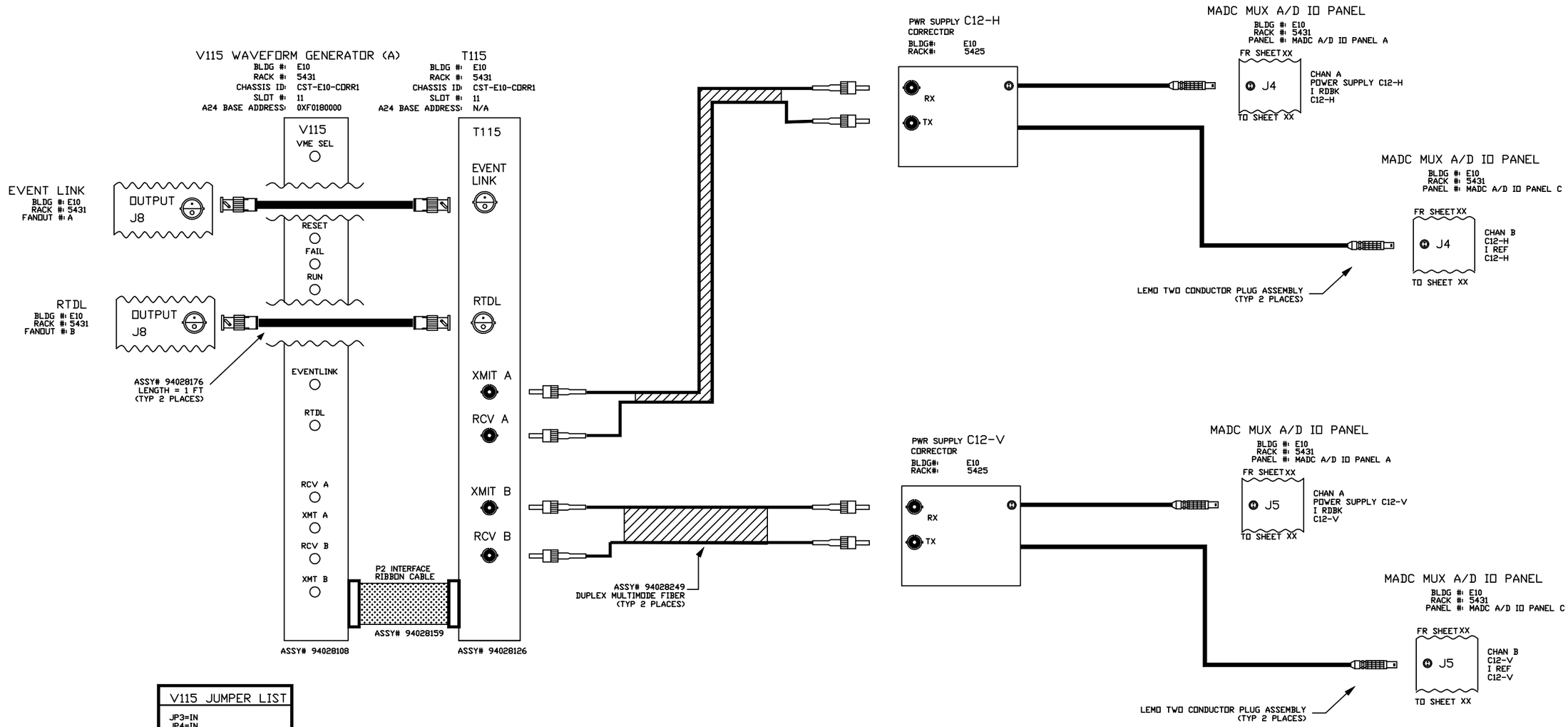

V115 JUMPER LIST
JP3=IN JP4=IN JP1=OUT JP2=OUT
A24 BASE ADDRESS JB1-A23=IN JB1-A22=IN JB1-A21=IN JB1-A20=OUT JB1-A19=OUT JB1-A18=IN

-3	-2	-1	REF DESIGNATOR	ITEM NO.	DESCRIPTION	MAT'L DWG NO./BNL NO.
QTY REQD						

INTERPRET IN GENERAL ACCORDANCE WITH ASME Y14.24M-1989

UNLESS OTHERWISE SPECIFIED DIMENSIONS ARE IN INCHES

DECIMAL TOLERANCES
.X ±.030
.XX ±.015
.XXX ±.005
ANGULAR TOLERANCE
± .5°

OUTSTANDING ECN

NA FINISH

BREAK SHARP EDGES
MAX. XX MIN. XX

Q.A. CATEGORY A-3

		DATE
DRAWN BY	JASON ORTIZ	5/10/00
CHECKED BY		
DESIGN APPROVAL		
ENGINEER APPROVAL		
SUPVR. APPROVAL		

NEXT ASSEMBLY

BROOKHAVEN NATIONAL LABORATORY
UPTON, N.Y. 11973

C-A CONTROLS WIRING DIAGRAM

A10 CST-E10-CORR1

POWER SUPPLY C12-H/C12-V

SIZE D | DRAWING NUMBER | REV. A

MATERIAL: ——— SCALE: NA WEIGHT: – SHEET 13 of 32

*AUTOCAD

REV.	ZONE	ECN NO.	DATE	BY	CKR	APP.

C-A Controls, Brookhaven National Laboratory 5/16/00 8:26 AM E10wfg4A.dwg

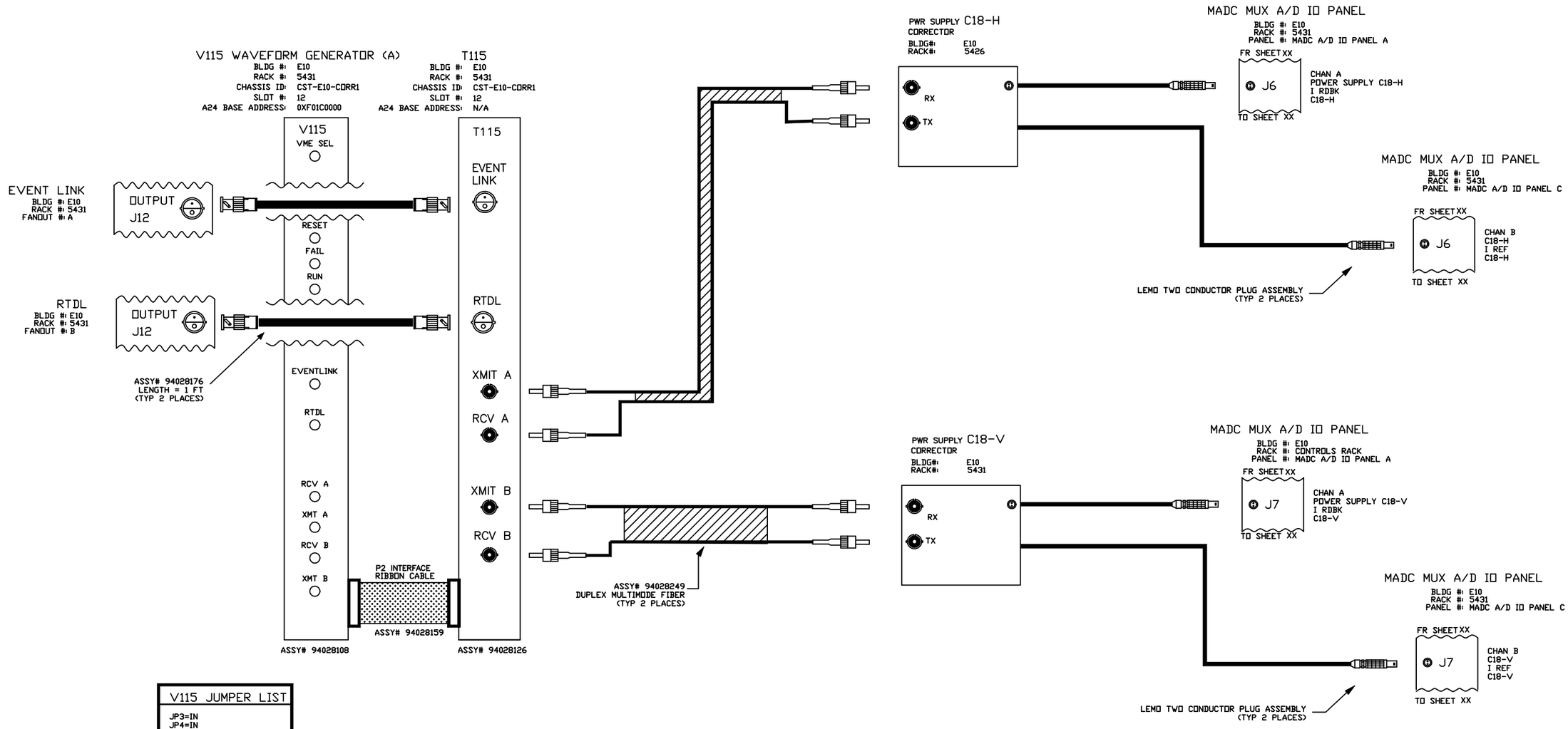

V115 JUMPER LIST
JP3=IN JP4=IN JP1=OUT JP2=OUT
A24 BASE ADDRESS JB1-A23=IN JB1-A22=IN JB1-A21=IN JB1-A20=OUT JB1-A19=OUT JB1-A18=OUT

-3	-2	-1	REF DESIGNATOR	ITEM NO.	DESCRIPTION	MAT'L DWG NO./BNL NO.
QTY REQD						

INTERPRET IN GENERAL ACCORDANCE WITH ASME Y14.24M-1989

UNLESS OTHERWISE SPECIFIED DIMENSIONS ARE IN INCHES

DECIMAL TOLERANCES
.X ±.030
.XX ±.015
.XXX ±.005
ANGULAR TOLERANCE
± .5°

NA FINISH

BREAK SHARP EDGES
MAX. XX MIN. XX

OUTSTANDING ECN

Q.A. CATEGORY A-3

		DATE
DRAWN BY	JASON ORTIZ	5/16/00
CHECKED BY		
DESIGN APPROVAL		
ENGINEER APPROVAL		
SUPVR. APPROVAL		

NEXT ASSEMBLY

BROOKHAVEN NATIONAL LABORATORY
UPTON, N.Y. 11973

C-A CONTROLS WIRING DIAGRAM

E10 CST-E10-CORR1

POWER SUPPLY C18-H/C18-V

SIZE D | DRAWING NUMBER | REV. A

MATERIAL: ——— SCALE: NA WEIGHT: – SHEET 14 of 32

*AUTOCAD

REV.	ZONE	ECN NO.	DATE	BY	CKR	APP.

C-A Controls, Brookhaven National Laboratory 5/16/00 8:31 AM E10wfg5A.dwg

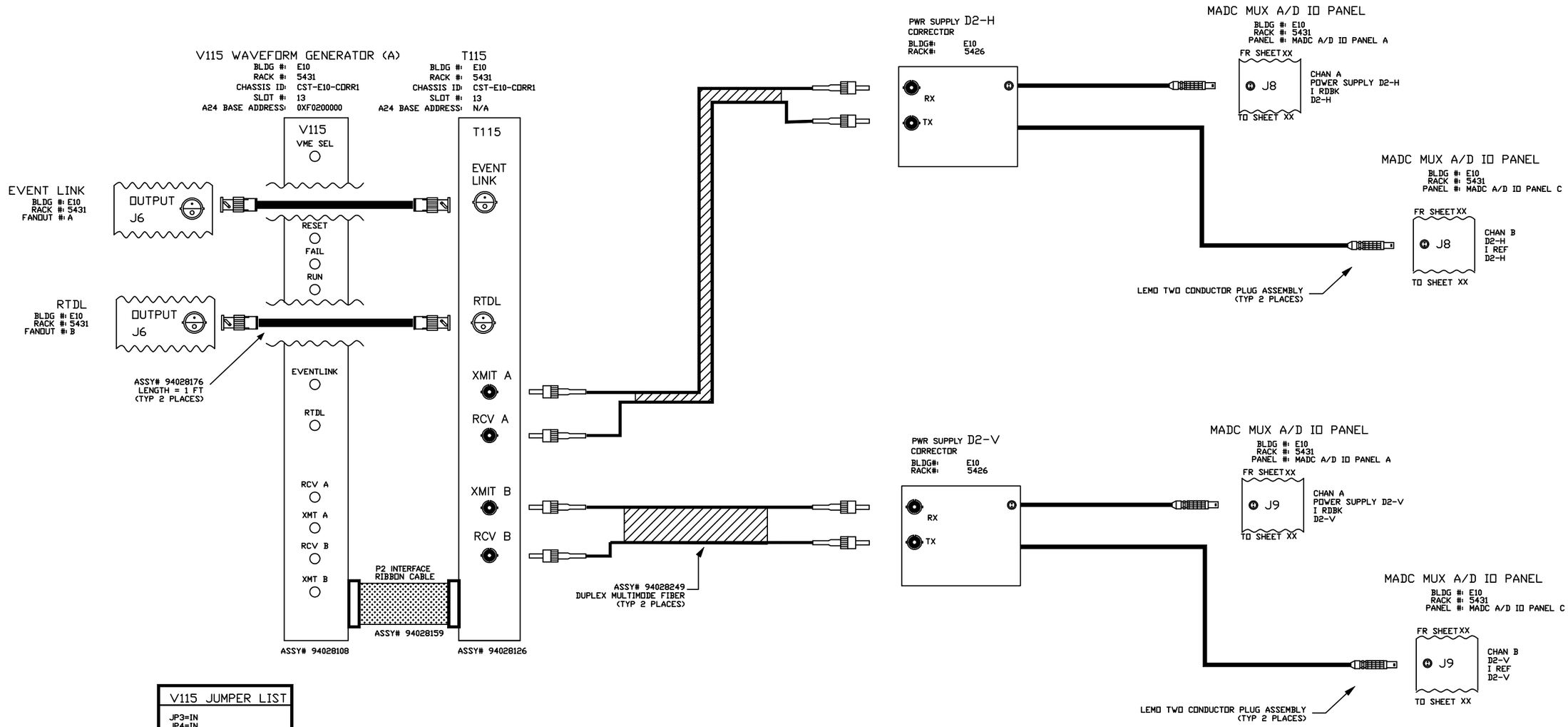

V115 JUMPER LIST
JP3=IN JP4=IN JP1=OUT JP2=OUT
A24 BASE ADDRESS JB1-A23=IN JB1-A22=IN JB1-A21=OUT JB1-A20=IN JB1-A19=IN JB1-A18=IN

-3	-2	-1	REF DESIGNATOR	ITEM NO.	DESCRIPTION	MAT'L DWG NO./BNL NO.
QTY REQD						

INTERPRET IN GENERAL ACCORDANCE WITH ASME Y14.24M-1989	Q.A. CATEGORY A-3	DATE	BROOKHAVEN NATIONAL LABORATORY
	DRAWN BY JASON ORTIZ	5/16/00	UPTON, N.Y. 11973
UNLESS OTHERWISE SPECIFIED DIMENSIONS ARE IN INCHES	CHECKED BY		C-A CONTROLS WIRING DIAGRAM
DECIMAL TOLERANCES .X ±.030 .XX ±.015 .XXX ±.005 ANGULAR TOLERANCE ± .5°	DESIGN APPROVAL		E10 CST-E10-CORR1
	ENGINEER APPROVAL		POWER SUPPLY D2-H/D2-V
	SUPVR. APPROVAL		SIZE D / REV. A
NA FINISH / BREAK SHARP EDGES MAX. XX MIN. XX	NEXT ASSEMBLY		DRAWING NUMBER
OUTSTANDING ECN			MATERIAL: ——— SCALE: NA WEIGHT: – SHEET 15 of 32

*AUTOCAD

C-A Controls, Brookhaven National Laboratory 5/16/00 8:43 AM E10wfg6A.dwg

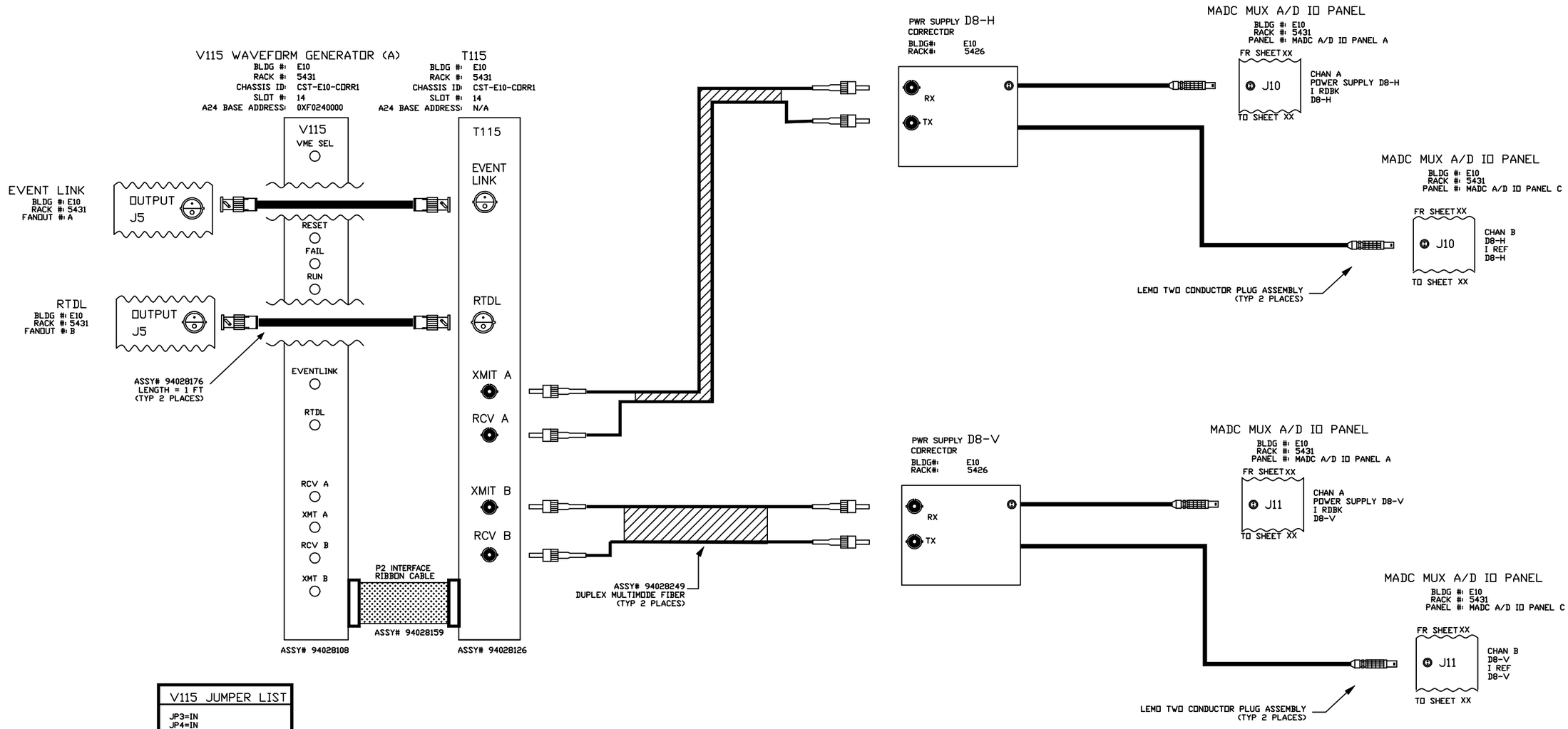

V115 JUMPER LIST
JP3=IN JP4=IN JP1=OUT JP2=OUT
A24 BASE ADDRESS JB1-A23=IN JB1-A22=IN JB1-A21=OUT JB1-A20=IN JB1-A19=IN JB1-A18=OUT

REV.	ZONE	ECN NO.	DATE	BY	CKR	APP.

-3	-2	-1	REF DESIGNATOR	ITEM NO.	DESCRIPTION	MAT'L DWG NO./BNL NO.
QTY REQD						

INTERPRET IN GENERAL ACCORDANCE WITH ASME Y14.24M-1989

UNLESS OTHERWISE SPECIFIED DIMENSIONS ARE IN INCHES

DECIMAL TOLERANCES
.X ±.030
.XX ±.015
.XXX ±.005
ANGULAR TOLERANCE
± .5°

NA FINISH

BREAK SHARP EDGES
MAX. XX MIN. XX

OUTSTANDING ECN

Q.A. CATEGORY A-3

		DATE
DRAWN BY	JASON ORTIZ	5/16/00
CHECKED BY		
DESIGN APPROVAL		
ENGINEER APPROVAL		
SUPVR. APPROVAL		

NEXT ASSEMBLY

BROOKHAVEN NATIONAL LABORATORY
UPTON, N.Y. 11973

C-A CONTROLS WIRING DIAGRAM
E10 CST-E10-CORR1

POWER SUPPLY D8-H/D8-V

SIZE A | DRAWING NUMBER | REV. A

MATERIAL: ——— SCALE: NA WEIGHT: – SHEET 16 of 32

1 *AUTOCAD

REV.	ZONE	ECN NO.	DATE	BY	CKR	APP.

C-A Controls, Brookhaven National Laboratory 5/16/00 8:50 AM E10wfg7A.dwg

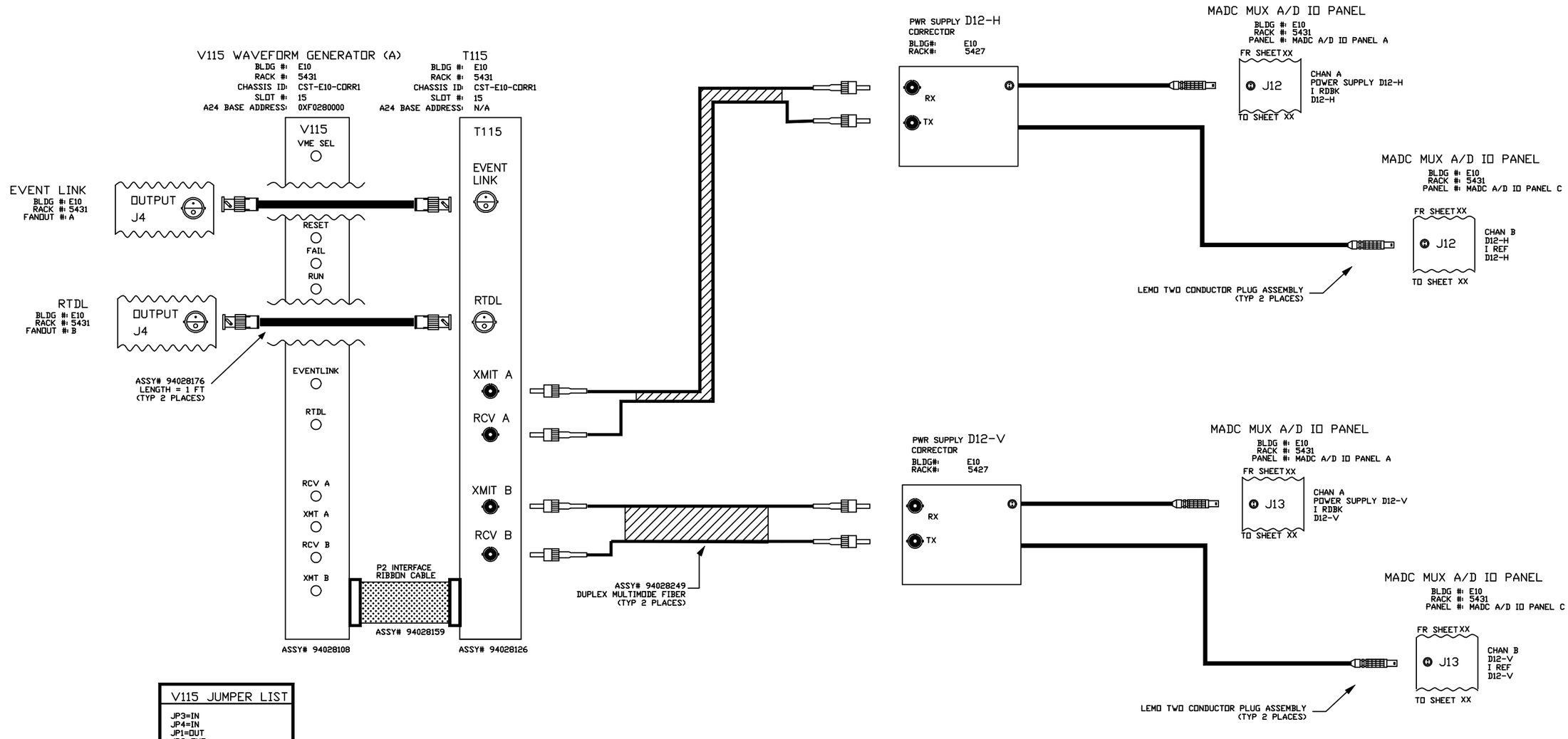

V115 JUMPER LIST
JP3=IN JP4=IN JP1=OUT JP2=OUT
A24 BASE ADDRESS JB1-A23=IN JB1-A22=IN JB1-A21=OUT JB1-A20=IN JB1-A19=OUT JB1-A18=IN

-3	-2	-1	REF DESIGNATOR	ITEM NO.	DESCRIPTION	MAT'L DWG NO./BNL NO.
QTY REQD						

INTERPRET IN GENERAL ACCORDANCE WITH ASME Y14.24M-1989

UNLESS OTHERWISE SPECIFIED DIMENSIONS ARE IN INCHES

DECIMAL TOLERANCES
.X ±.030
.XX ±.015
.XXX ±.005
ANGULAR TOLERANCE
± .5°

NA FINISH

BREAK SHARP EDGES
MAX. XX MIN. XX

OUTSTANDING ECN

Q.A. CATEGORY A-3

		DATE
DRAWN BY	JASON ORTIZ	5/16/00
CHECKED BY		
DESIGN APPROVAL		
ENGINEER APPROVAL		
SUPVR. APPROVAL		

NEXT ASSEMBLY

BROOKHAVEN NATIONAL LABORATORY
UPTON, N.Y. 11973

C-A CONTROLS WIRING DIAGRAM

E10 CST-E10-CORR1

POWER SUPPLY D12-H/D12-V

SIZE A | DRAWING NUMBER | REV. A

MATERIAL: ——— SCALE: NA WEIGHT: — SHEET 17 of 32

*AUTOCAD

REV.	ZONE	ECN NO.	DATE	BY	CKR	APP.

C-A Controls, Brookhaven National Laboratory 5/16/00 9:07 AM E10wfg8A.dwg

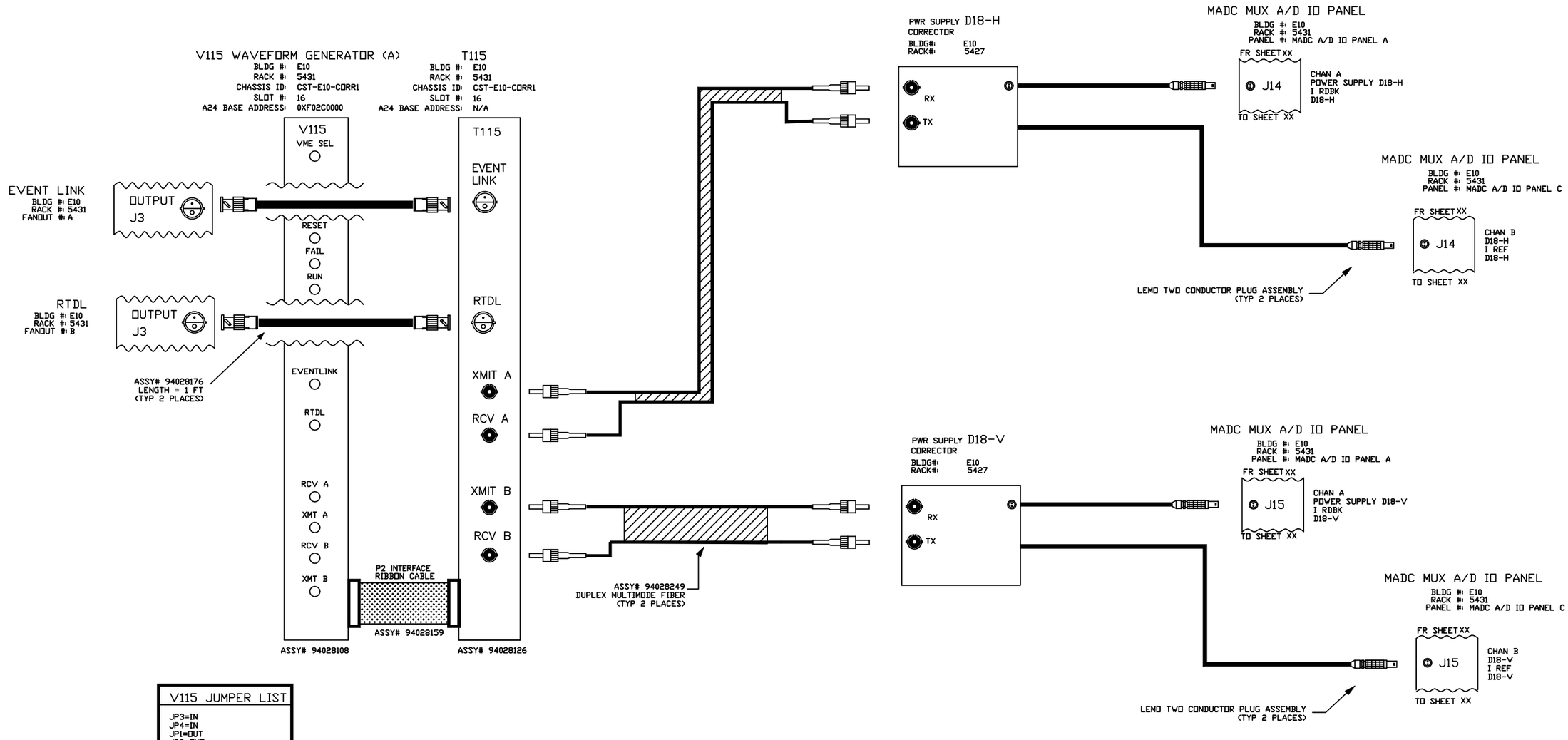

V115 JUMPER LIST
JP3=IN JP4=IN JP1=OUT JP2=OUT
A24 BASE ADDRESS JB1-A23=IN JB1-A22=IN JB1-A21=OUT JB1-A20=IN JB1-A19=OUT JB1-A18=OUT

-3	-2	-1	REF DESIGNATOR	ITEM NO.	DESCRIPTION	MAT'L DWG NO./BNL NO.
QTY REQD						

INTERPRET IN GENERAL ACCORDANCE WITH ASME Y14.24M-1989

UNLESS OTHERWISE SPECIFIED DIMENSIONS ARE IN INCHES

DECIMAL TOLERANCES
.X ±.030
.XX ±.015
.XXX ±.005
ANGULAR TOLERANCE
± .5°

NA FINISH

BREAK SHARP EDGES
MAX. XX MIN. XX

OUTSTANDING ECN

Q.A. CATEGORY A-3

		DATE
DRAWN BY	JASON ORTIZ	5/16/00
CHECKED BY		
DESIGN APPROVAL		
ENGINEER APPROVAL		
SUPVR. APPROVAL		

NEXT ASSEMBLY

BROOKHAVEN NATIONAL LABORATORY
UPTON, N.Y. 11973

C-A CONTROLS WIRING DIAGRAM

E10 CST-E10-CORR1

POWER SUPPLY D18-H/D18-V

SIZE A | DRAWING NUMBER | REV. A

MATERIAL: ——— SCALE: NA WEIGHT: – SHEET 18 of 32

*AUTOCAD

REV.	ZONE	ECN NO.	DATE	BY	CKR	APP.

C-A Controls, Brookhaven National Laboratory 5/16/00 9:20 AM E10wfg9A.dwg

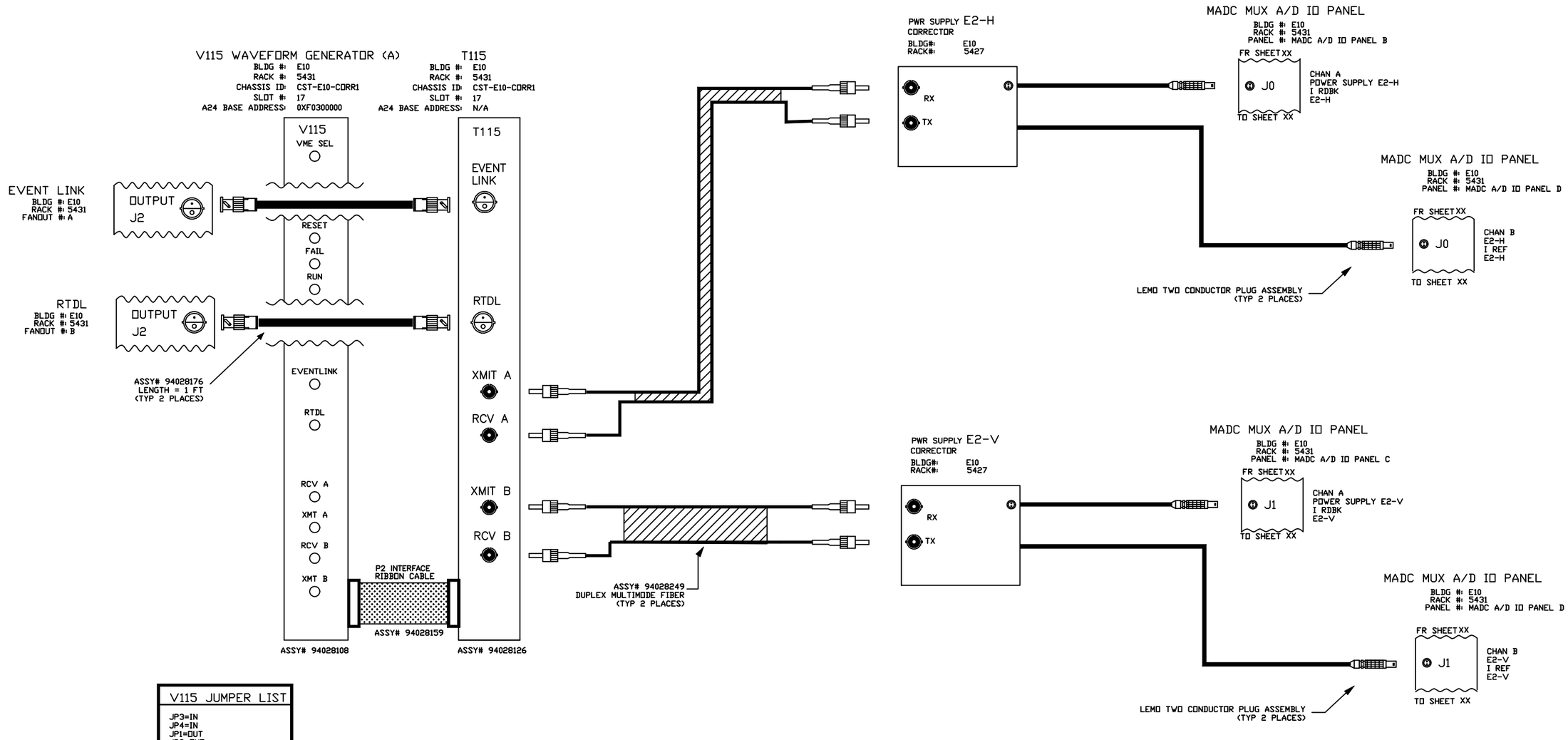

V115 JUMPER LIST
JP3=IN JP4=IN JP1=OUT JP2=OUT
A24 BASE ADDRESS JB1-A23=IN JB1-A22=IN JB1-A21=OUT JB1-A20=OUT JB1-A19=IN JB1-A18=IN

-3	-2	-1	REF DESIGNATOR	ITEM NO.	DESCRIPTION	MAT'L DWG NO./BNL NO.
QTY REQD						

INTERPRET IN GENERAL ACCORDANCE WITH ASME Y14.24M-1989

UNLESS OTHERWISE SPECIFIED DIMENSIONS ARE IN INCHES

DECIMAL TOLERANCES
.X ±.030
.XX ±.015
.XXX ±.005
ANGULAR TOLERANCE
± .5°

NA FINISH

BREAK SHARP EDGES
MAX. XX MIN. XX

OUTSTANDING ECN

Q.A. CATEGORY A-3

		DATE
DRAWN BY	JASON ORTIZ	5/16/00
CHECKED BY		
DESIGN APPROVAL		
ENGINEER APPROVAL		
SUPVR. APPROVAL		

NEXT ASSEMBLY

BROOKHAVEN NATIONAL LABORATORY
UPTON, N.Y. 11973

C-A CONTROLS WIRING DIAGRAM

E10 CST-E10-CORR1

POWER SUPPLY E2-H/E2-V

SIZE A | DRAWING NUMBER | REV. A

MATERIAL: ——— SCALE: NA WEIGHT: – SHEET 19 of 32

*AUTOCAD

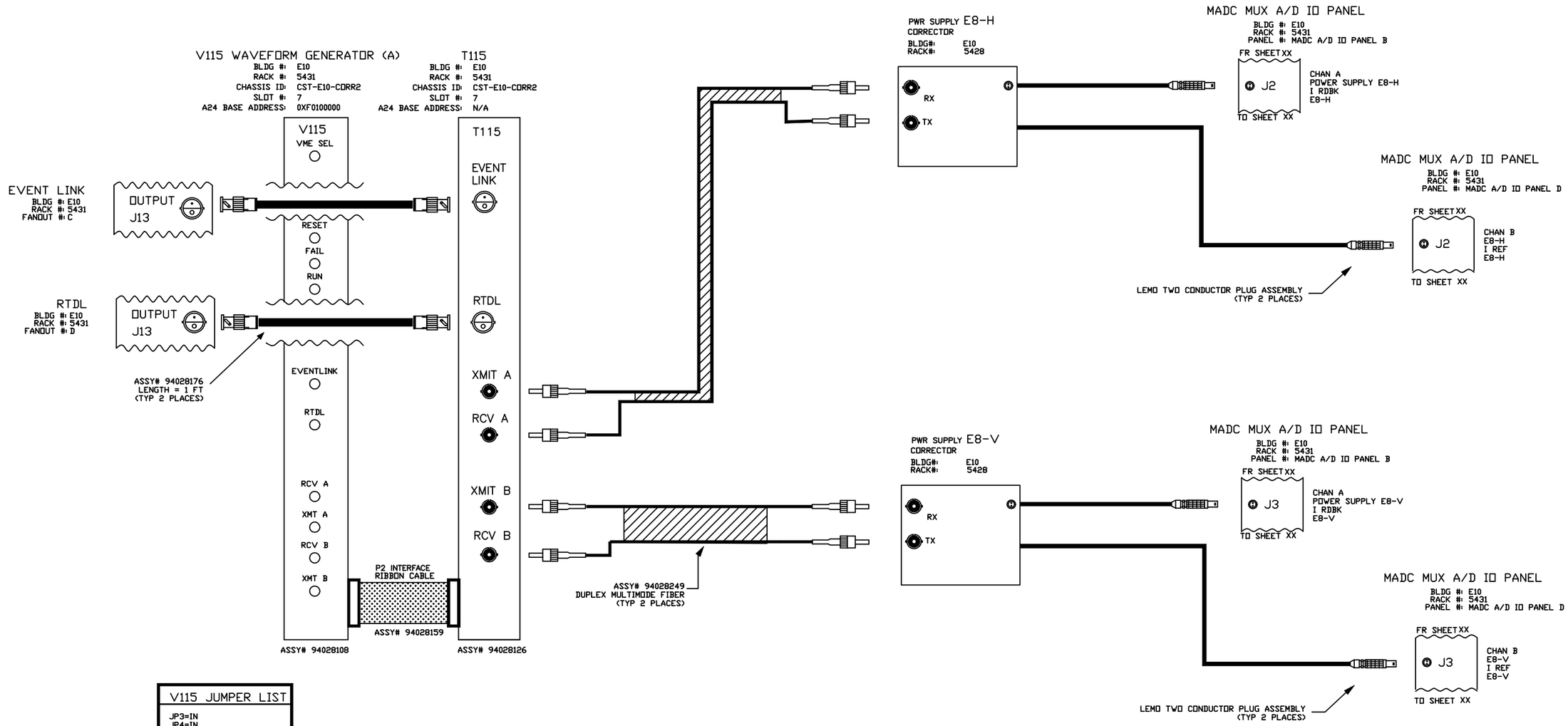

V115 JUMPER LIST
JP3=IN JP4=IN JP1=OUT JP2=OUT
A24 BASE ADDRESS JB1-A23=IN JB1-A22=IN JB1-A21=IN JB1-A20=OUT JB1-A19=IN JB1-A18=IN

-3	-2	-1	REF DESIGNATOR	ITEM NO.	DESCRIPTION	MAT'L DWG NO./BNL NO.
QTY REQD						

INTERPRET IN GENERAL ACCORDANCE WITH ASME Y14.24M-1989

UNLESS OTHERWISE SPECIFIED DIMENSIONS ARE IN INCHES

DECIMAL TOLERANCES
.X ±.030
.XX ±.015
.XXX ±.005
ANGULAR TOLERANCE
± .5°

NA FINISH

BREAK SHARP EDGES
MAX. XX MIN. XX

OUTSTANDING ECN

Q.A. CATEGORY A-3

		DATE
DRAWN BY	JASON ORTIZ	5/16/00
CHECKED BY		
DESIGN APPROVAL		
ENGINEER APPROVAL		
SUPVR. APPROVAL		

NEXT ASSEMBLY

BROOKHAVEN NATIONAL LABORATORY
UPTON, N.Y. 11973

C-A CONTROLS WIRING DIAGRAM

E10 CST-E10-CORR2

POWER SUPPLY E8-H/E8-V

SIZE D | DRAWING NUMBER | REV. A

MATERIAL: ——— SCALE: NA WEIGHT: — SHEET 20 of 32

*AUTOCAD

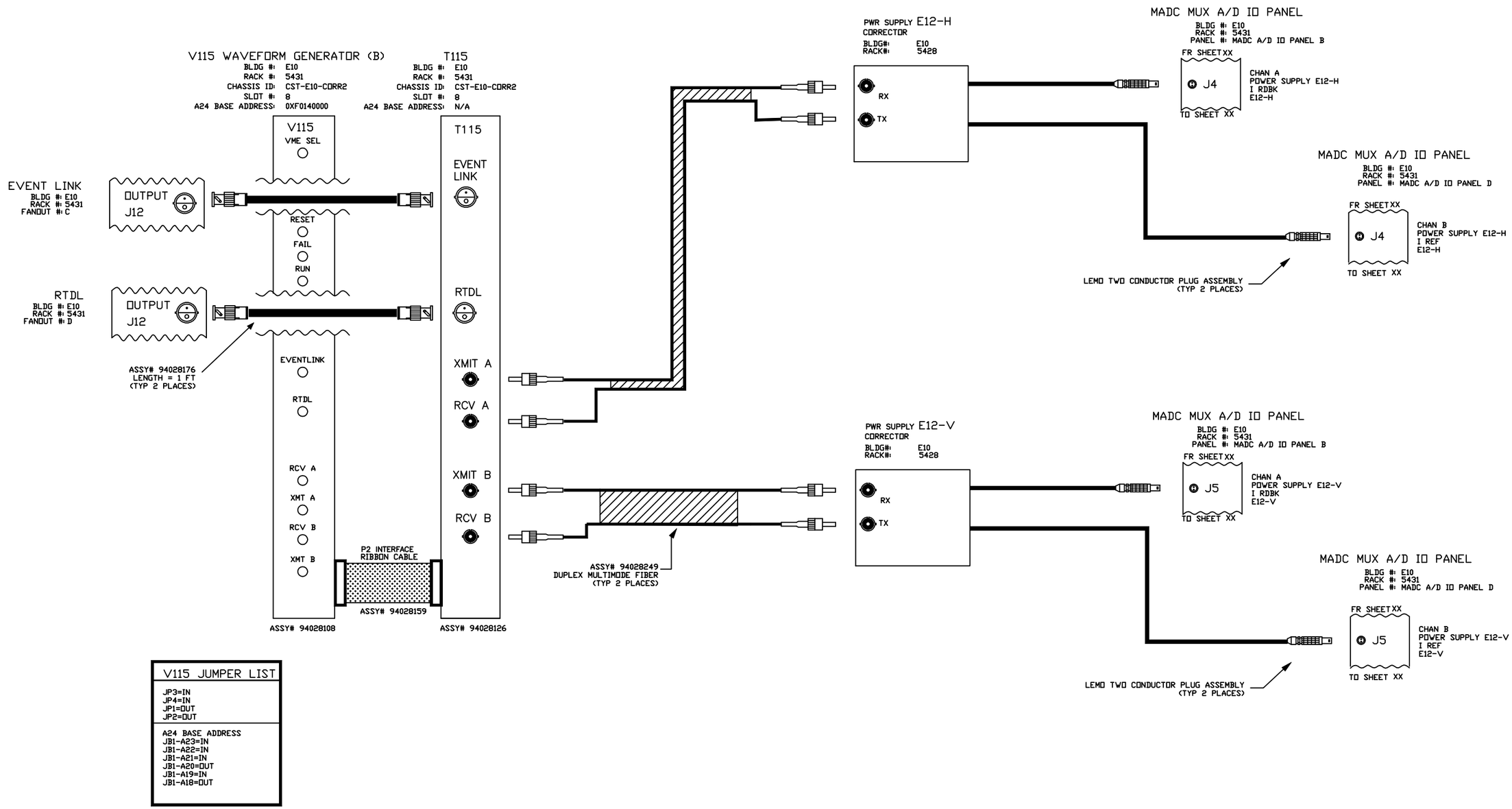

V115 JUMPER LIST
JP3=IN JP4=IN JP1=OUT JP2=OUT
A24 BASE ADDRESS JB1-A23=IN JB1-A22=IN JB1-A21=IN JB1-A20=OUT JB1-A19=IN JB1-A18=OUT

-3	-2	-1	REF DESIGNATOR	ITEM NO.	DESCRIPTION	MAT'L DWG NO./BNL NO.
QTY REQD						

INTERPRET IN GENERAL ACCORDANCE WITH ASME Y14.24M-1989

UNLESS OTHERWISE SPECIFIED DIMENSIONS ARE IN INCHES

DECIMAL TOLERANCES
.X ±.030
.XX ±.015
.XXX ±.005
ANGULAR TOLERANCE
± .5°

OUTSTANDING ECN

NA FINISH

BREAK SHARP EDGES
MAX. XX MIN. XX

Q.A. CATEGORY A-3

		DATE
DRAWN BY	Jason Ortiz	5/10/00
CHECKED BY		
DESIGN APPROVAL		
ENGINEER APPROVAL		
SUPVR. APPROVAL		

NEXT ASSEMBLY

BROOKHAVEN NATIONAL LABORATORY
UPTON, N.Y. 11973

C-A CONTROLS WIRING DIAGRAM

E10, CST-E10-CORR2

POWER SUPPLY E12-H/E12-V

SIZE D | DRAWING NUMBER | REV. A

MATERIAL: ——— SCALE: NA WEIGHT: — SHEET 21 of 32

*AUTOCAD

REV.	ZONE	ECN NO.	DATE	BY	CKR	APP.

C-A Controls, Brookhaven National Laboratory 5/16/00 10:19 AM E10wfg3B.dwg

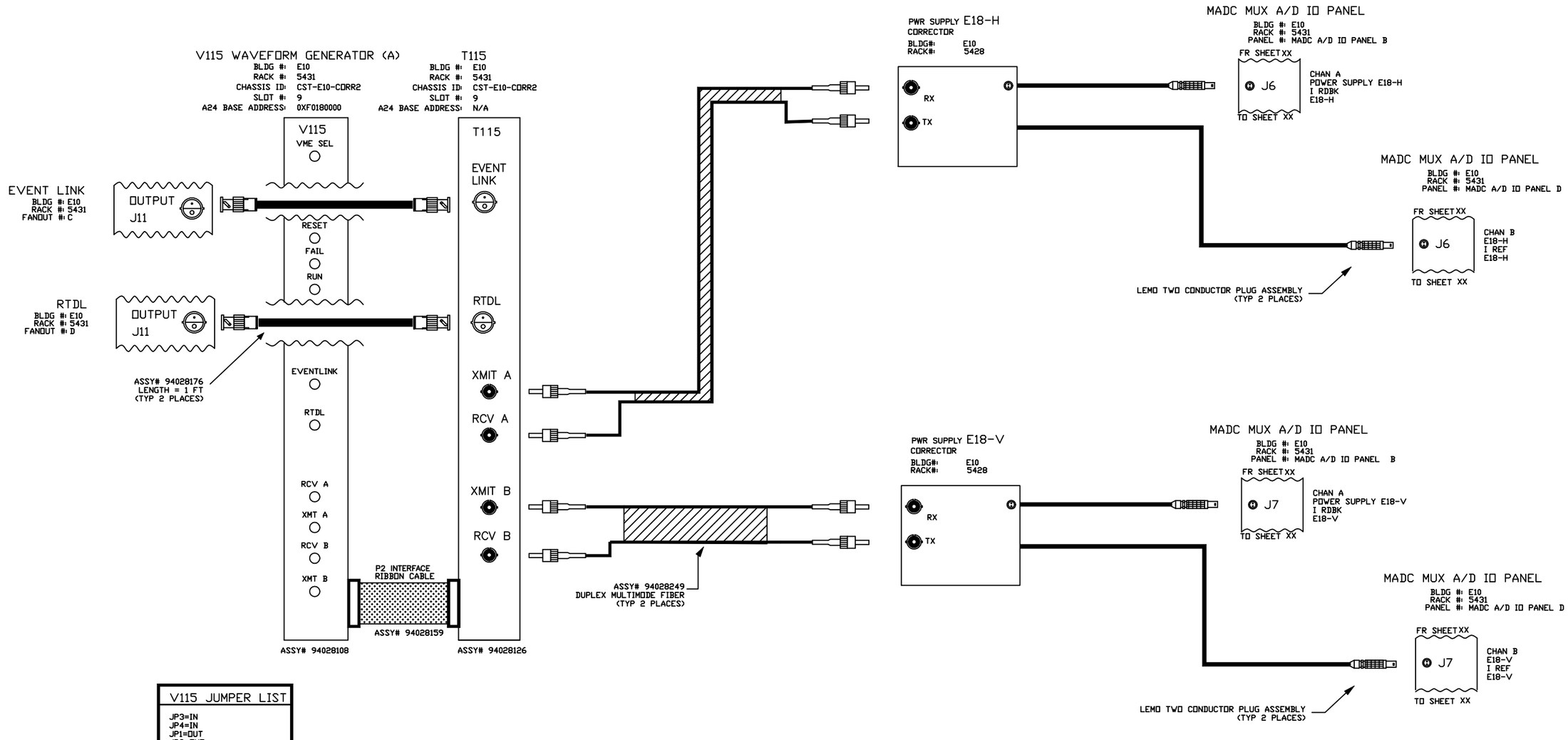

V115 JUMPER LIST
JP3=IN JP4=IN JP1=OUT JP2=OUT
A24 BASE ADDRESS JB1-A23=IN JB1-A22=IN JB1-A21=IN JB1-A20=OUT JB1-A19=OUT JB1-A18=IN

-3	-2	-1	REF DESIGNATOR	ITEM NO.	DESCRIPTION	MAT'L DWG NO.,BNL NO.
QTY REQD						

INTERPRET IN GENERAL ACCORDANCE WITH ASME Y14.24M-1989

UNLESS OTHERWISE SPECIFIED DIMENSIONS ARE IN INCHES

DECIMAL TOLERANCES
.X ±.030
.XX ±.015
.XXX ±.005
ANGULAR TOLERANCE
± .5°

NA FINISH

BREAK SHARP EDGES
MAX. XX MIN. XX

OUTSTANDING ECN

Q.A. CATEGORY A-3

		DATE
DRAWN BY	JASON ORTIZ	5/16/00
CHECKED BY		
DESIGN APPROVAL		
ENGINEER APPROVAL		
SUPVR. APPROVAL		

NEXT ASSEMBLY

BROOKHAVEN NATIONAL LABORATORY
UPTON, N.Y. 11973

C-A CONTROLS WIRING DIAGRAM

E10 CST-E10-CORR2

POWER SUPPLY E18-H/E18-V

SIZE D | DRAWING NUMBER | REV. A

MATERIAL: ——— SCALE: NA WEIGHT: – SHEET 22 of 32

*AUTOCAD

REV.	ZONE	ECN NO.	DATE	BY	CKR	APP.

C-A Controls, Brookhaven National Laboratory 5/16/00 10:25 AM E10wfg4B.dwg

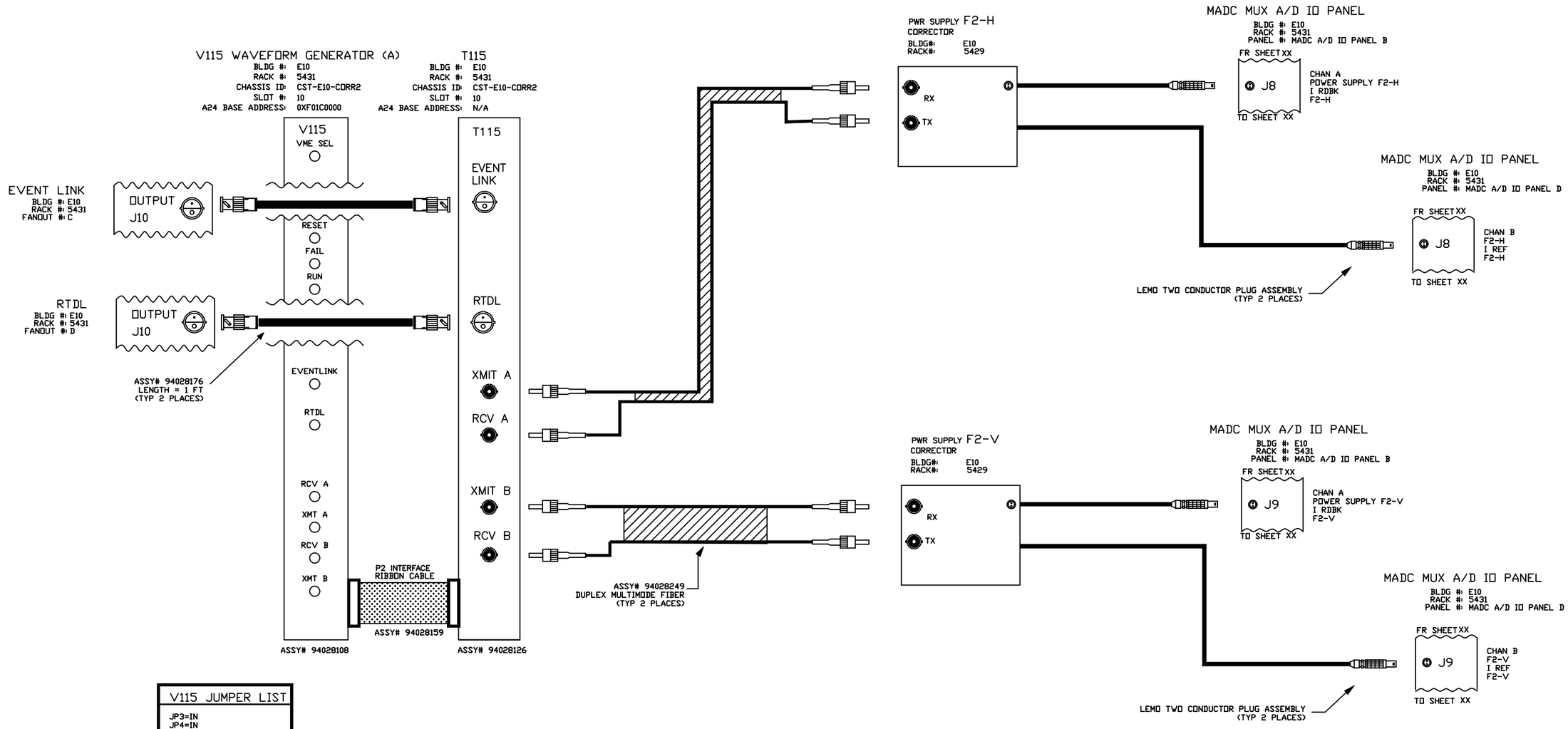

V115 JUMPER LIST
JP3=IN JP4=IN JP1=OUT JP2=OUT
A24 BASE ADDRESS JB1-A23=IN JB1-A22=IN JB1-A21=IN JB1-A20=OUT JB1-A19=OUT JB1-A18=OUT

-3	-2	-1	REF DESIGNATOR	ITEM NO.	DESCRIPTION	MAT'L DWG NO./BNL NO.
QTY REQD						

INTERPRET IN GENERAL ACCORDANCE WITH ASME Y14.24M-1989

UNLESS OTHERWISE SPECIFIED DIMENSIONS ARE IN INCHES

DECIMAL TOLERANCES
.X ±.030
.XX ±.015
.XXX ±.005
ANGULAR TOLERANCE
± .5°

NA FINISH

BREAK SHARP EDGES
MAX. XX MIN. XX

OUTSTANDING ECN

Q.A. CATEGORY A-3

		DATE
DRAWN BY	JASON ORTIZ	5/16/00
CHECKED BY		
DESIGN APPROVAL		
ENGINEER APPROVAL		
SUPVR. APPROVAL		

NEXT ASSEMBLY

BROOKHAVEN NATIONAL LABORATORY
UPTON, N.Y. 11973

C-A CONTROLS WIRING DIAGRAM

E10 CST-E10-CORR2

POWER SUPPLY F2-H/F2-V

SIZE D | DRAWING NUMBER | REV. A

MATERIAL: ——— SCALE: NA WEIGHT: – SHEET 23 of 32

*AUTOCAD

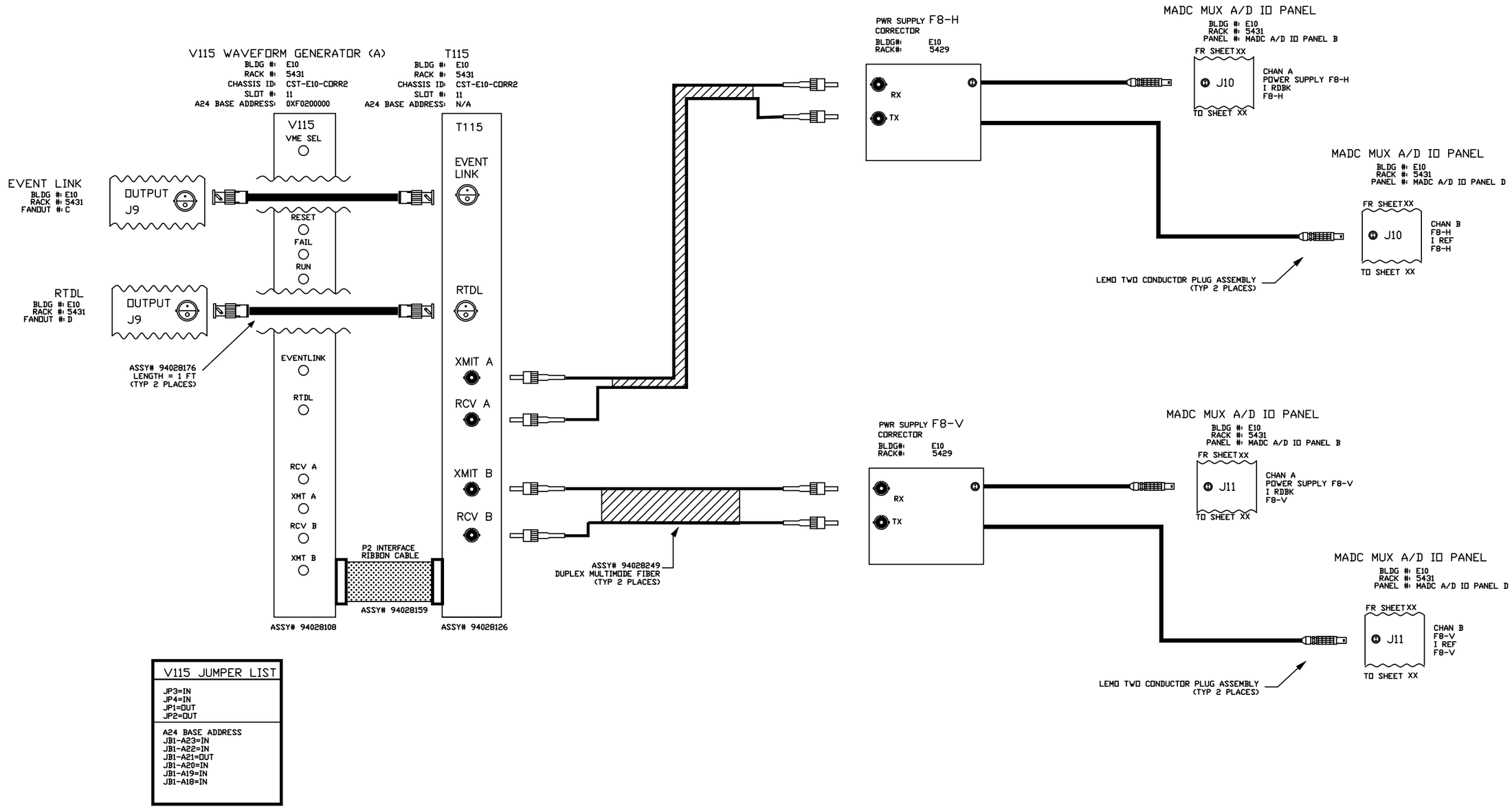

V115 JUMPER LIST
JP3=IN JP4=IN JP1=OUT JP2=OUT
A24 BASE ADDRESS JB1-A23=IN JB1-A22=IN JB1-A21=OUT JB1-A20=IN JB1-A19=IN JB1-A18=IN

REV.	ZONE	ECN NO.	DATE	BY	CKR	APP.

-3	-2	-1	REF DESIGNATOR	ITEM NO.	DESCRIPTION	MAT'L DWG NO./BNL NO.
QTY REQD						

INTERPRET IN GENERAL ACCORDANCE WITH ASME Y14.24M-1989

UNLESS OTHERWISE SPECIFIED DIMENSIONS ARE IN INCHES

DECIMAL TOLERANCES
.X ±.030
.XX ±.015
.XXX ±.005
ANGULAR TOLERANCE
± .5°

OUTSTANDING ECN

NA FINISH

BREAK SHARP EDGES
MAX. XX MIN. XX

Q.A. CATEGORY A-3

		DATE
DRAWN BY	JASON ORTIZ	5/16/00
CHECKED BY		
DESIGN APPROVAL		
ENGINEER APPROVAL		
SUPVR. APPROVAL		

NEXT ASSEMBLY

BROOKHAVEN NATIONAL LABORATORY
UPTON, N.Y. 11973

C-A CONTROLS WIRING DIAGRAM

E10 CST-E10-CORR2

POWER SUPPLY F8-H/F8-V

SIZE D | DRAWING NUMBER | REV. A

MATERIAL: ——— SCALE: NA WEIGHT: – SHEET 24 of 32

1 *AUTOCAD

REV.	ZONE	ECN NO.	DATE	BY	CKR	APP.

C-A Controls, Brookhaven National Laboratory 5/16/00 10:48 AM E10wfg6B.dwg

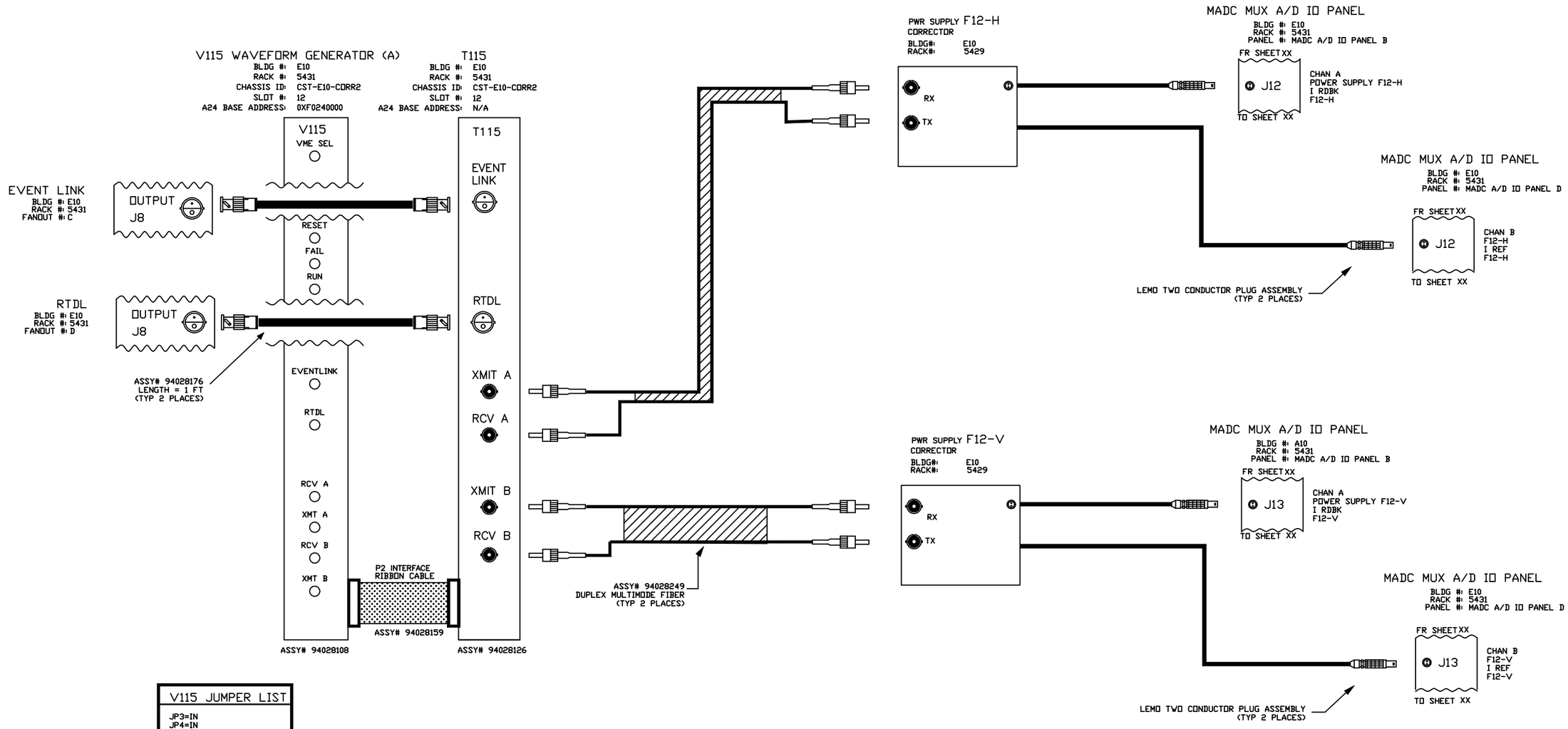

V115 JUMPER LIST
JP3=IN JP4=IN JP1=OUT JP2=OUT
A24 BASE ADDRESS JB1-A23=IN JB1-A22=IN JB1-A21=OUT JB1-A20=IN JB1-A19=IN JB1-A18=OUT

-3	-2	-1	REF DESIGNATOR	ITEM NO.	DESCRIPTION	MAT'L DWG NO./BNL NO.
QTY REQD						

INTERPRET IN GENERAL ACCORDANCE WITH ASME Y14.24M-1989

UNLESS OTHERWISE SPECIFIED DIMENSIONS ARE IN INCHES

DECIMAL TOLERANCES
.X ±.030
.XX ±.015
.XXX ±.005
ANGULAR TOLERANCE
± .5°

OUTSTANDING ECN

NA FINISH

BREAK SHARP EDGES
MAX. XX MIN. XX

Q.A. CATEGORY A-3

		DATE
DRAWN BY	JASON ORTIZ	5/16/00
CHECKED BY		
DESIGN APPROVAL		
ENGINEER APPROVAL		
SUPVR. APPROVAL		

NEXT ASSEMBLY

BROOKHAVEN NATIONAL LABORATORY
UPTON, N.Y. 11973

C-A CONTROLS WIRING DIAGRAM

E10 CST-E10-CORR2

POWER SUPPLY F12-H/F12-V

SIZE A | DRAWING NUMBER | REV. A

MATERIAL: ——— SCALE: NA WEIGHT: – SHEET 25 of 32

*AUTOCAD

REV.	ZONE	ECN NO.	DATE	BY	CKR	APP.

C-A Controls, Brookhaven National Laboratory 5/16/00 10:54 AM E10wfg7B.dwg

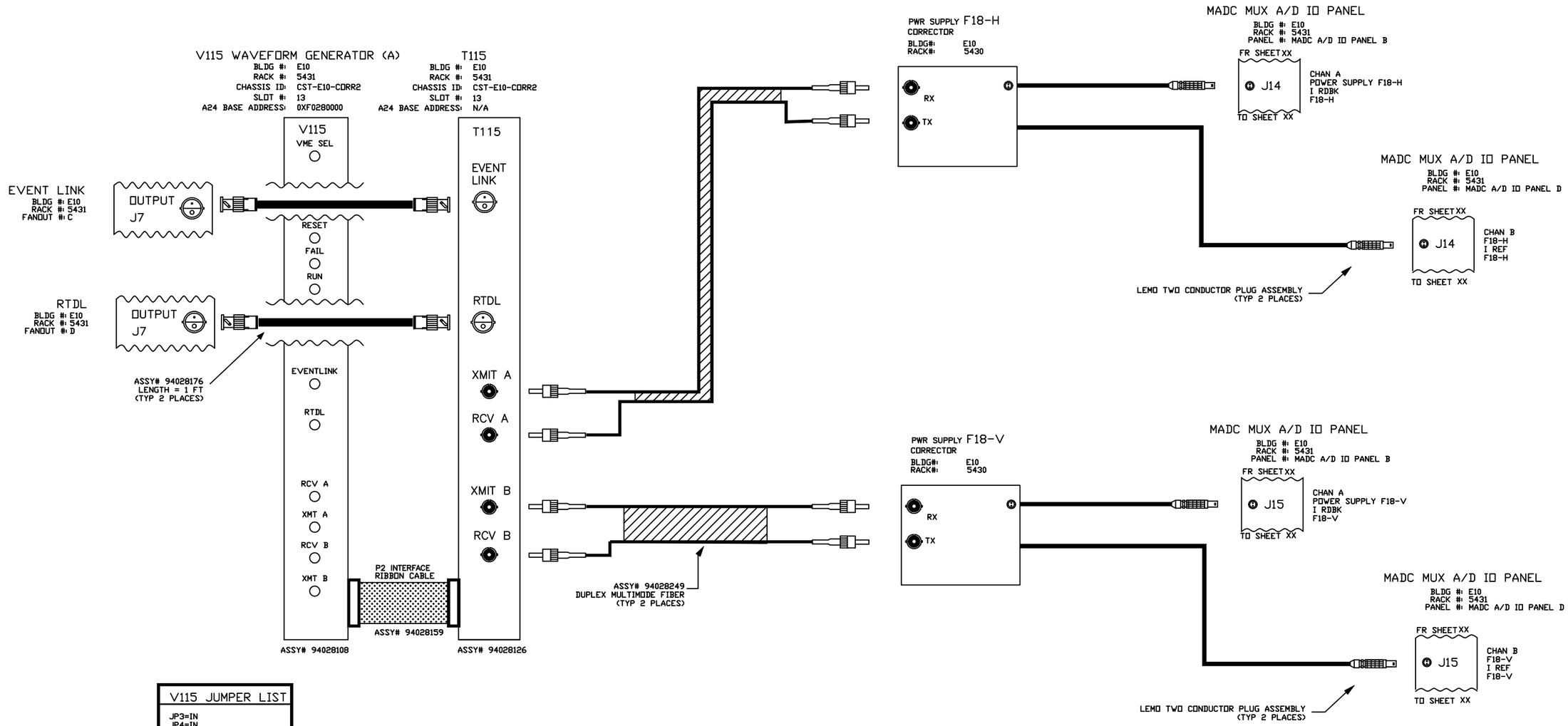

V115 JUMPER LIST
JP3=IN JP4=IN JP1=OUT JP2=OUT
A24 BASE ADDRESS JB1-A23=IN JB1-A22=IN JB1-A21=OUT JB1-A20=IN JB1-A19=OUT JB1-A18=IN

-3	-2	-1	REF DESIGNATOR	ITEM NO.	DESCRIPTION	MAT'L DWG NO./BNL NO.
QTY REQD						

INTERPRET IN GENERAL ACCORDANCE WITH ASME Y14.24M-1989

UNLESS OTHERWISE SPECIFIED DIMENSIONS ARE IN INCHES

DECIMAL TOLERANCES
.X ±.030
.XX ±.015
.XXX ±.005
ANGULAR TOLERANCE
± .5°

NA FINISH

BREAK SHARP EDGES
MAX. XX MIN. XX

OUTSTANDING ECN

Q.A. CATEGORY A-3

		DATE
DRAWN BY	JASON ORTIZ	5/16/00
CHECKED BY		
DESIGN APPROVAL		
ENGINEER APPROVAL		
SUPVR. APPROVAL		

NEXT ASSEMBLY

BROOKHAVEN NATIONAL LABORATORY
UPTON, N.Y. 11973

C-A CONTROLS WIRING DIAGRAM

E10 CST-E10-CORR2

POWER SUPPLY F18-H/F18-V

SIZE A | DRAWING NUMBER | REV. A

MATERIAL: ——— SCALE: NA WEIGHT: – SHEET 26 of 32

*AUTOCAD

REV.	ZONE	ECN NO.	DATE	BY	CKR	APP.

C-A Controls, Brookhaven National Laboratory 5/16/00 11:04 AM E10wfg8B.dwg

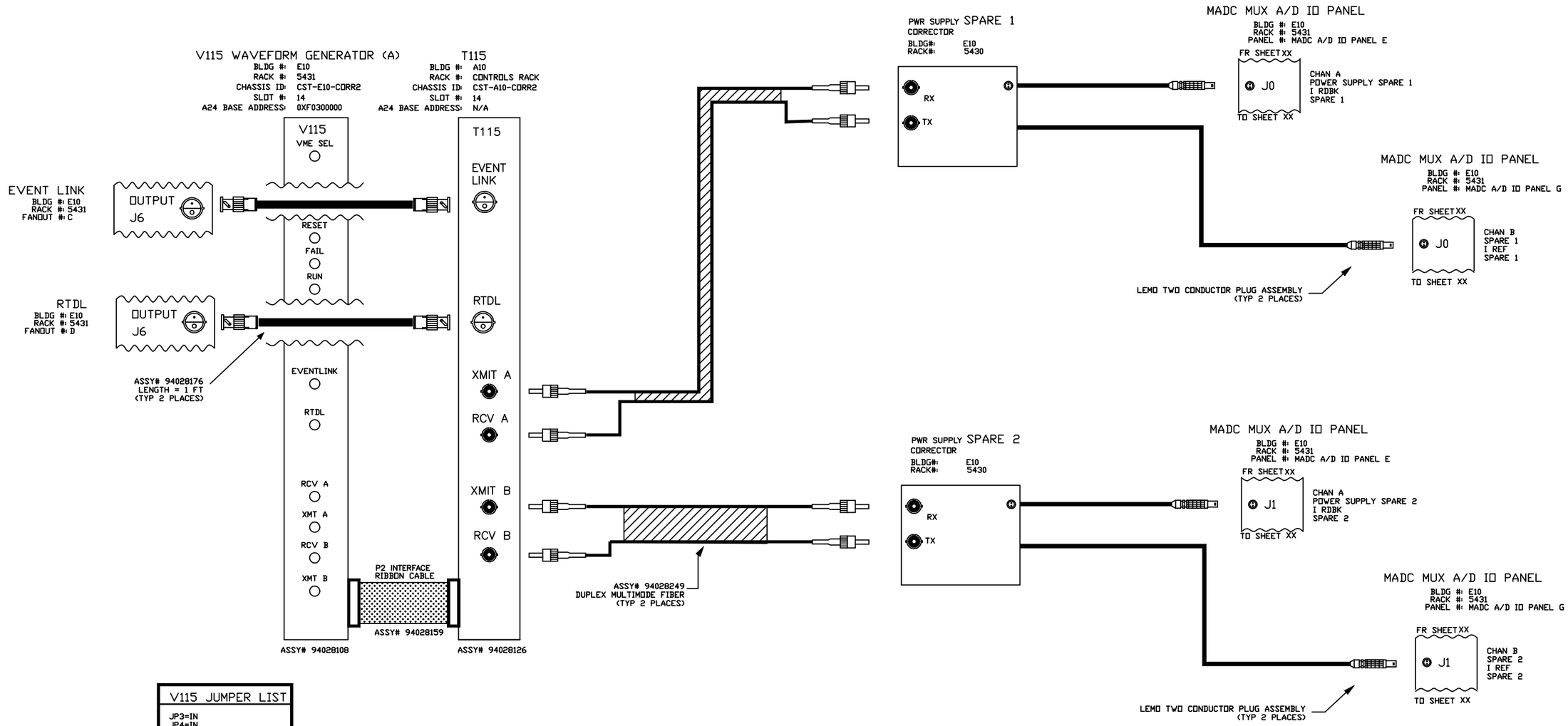

V115 JUMPER LIST
JP3=IN JP4=IN JP1=OUT JP2=OUT
A24 BASE ADDRESS JB1-A23=IN JB1-A22=IN JB1-A21=OUT JB1-A20=OUT JB1-A19=IN JB1-A18=IN

-3	-2	-1	REF DESIGNATOR	ITEM NO.	DESCRIPTION	MAT'L DWG NO./BNL NO.
QTY REQD						

INTERPRET IN GENERAL ACCORDANCE WITH ASME Y14.24M-1989

UNLESS OTHERWISE SPECIFIED DIMENSIONS ARE IN INCHES

DECIMAL TOLERANCES
.X ±.030
.XX ±.015
.XXX ±.005
ANGULAR TOLERANCE
± .5°

NA FINISH

BREAK SHARP EDGES
MAX. XX MIN. XX

OUTSTANDING ECN

Q.A. CATEGORY A-3

		DATE
DRAWN BY	JASON ORTIZ	5/16/00
CHECKED BY		
DESIGN APPROVAL		
ENGINEER APPROVAL		
SUPVR. APPROVAL		

NEXT ASSEMBLY

BROOKHAVEN NATIONAL LABORATORY
UPTON, N.Y. 11973

C-A CONTROLS WIRING DIAGRAM

E10 CST-E10-CORR2

POWER SUPPLY SPARE 1/SPARE 2

SIZE A | DRAWING NUMBER | REV. A

MATERIAL: ——— SCALE: NA WEIGHT: — SHEET 27 of 32

*AUTOCAD

REV.	ZONE	ECN NO.	DATE	BY	CKR	APP.

C-A Controls, Brookhaven National Laboratory 5/16/00 11:09 AM E10wfg9B.dwg

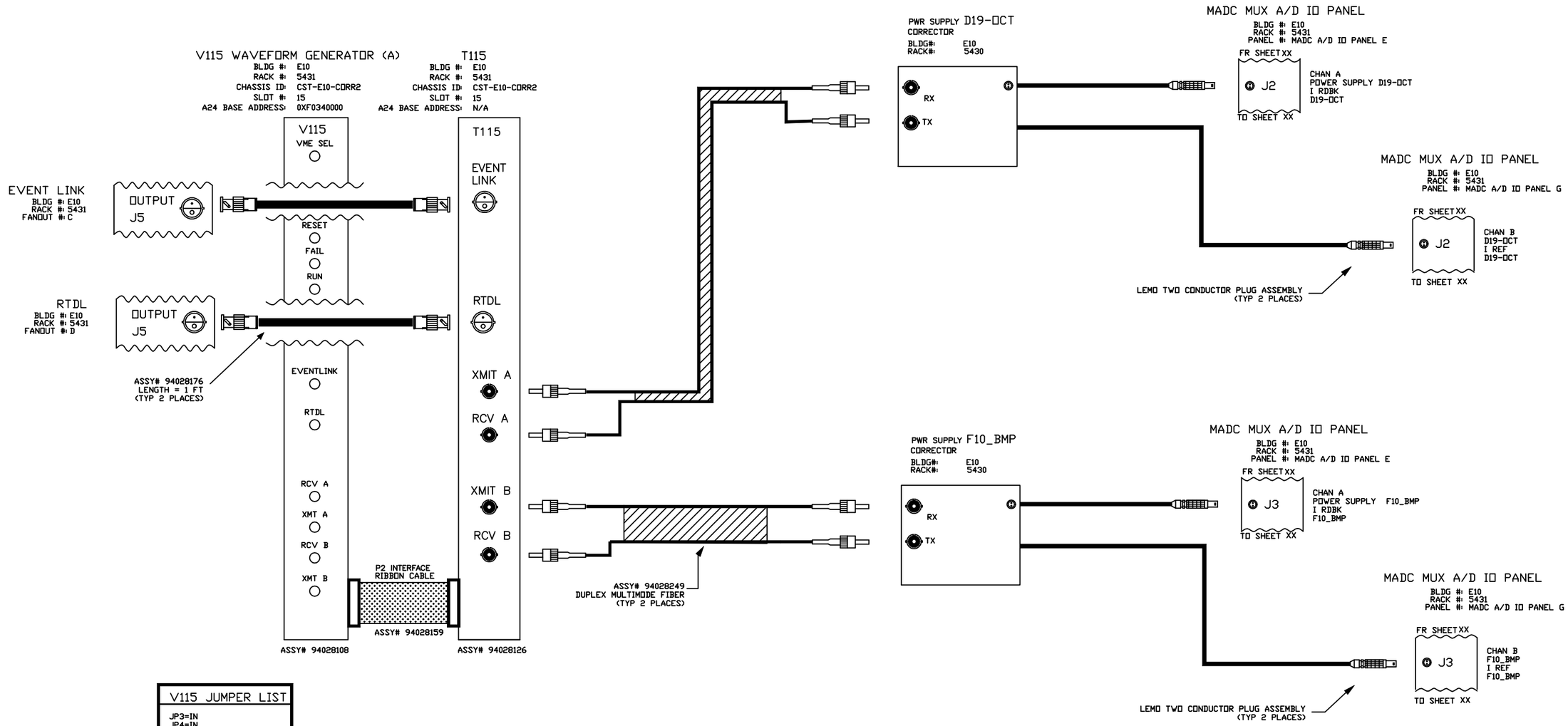

V115 JUMPER LIST
JP3=IN JP4=IN JP1=OUT JP2=OUT
A24 BASE ADDRESS JB1-A23=IN JB1-A22=IN JB1-A21=OUT JB1-A20=OUT JB1-A19=IN JB1-A18=OUT

-3	-2	-1	REF DESIGNATOR	ITEM NO.	DESCRIPTION	MAT'L DWG NO./BNL NO.
QTY REQD						

INTERPRET IN GENERAL ACCORDANCE WITH ASME Y14.24M-1989

UNLESS OTHERWISE SPECIFIED DIMENSIONS ARE IN INCHES

DECIMAL TOLERANCES
.X ±.030
.XX ±.015
.XXX ±.005
ANGULAR TOLERANCE
± .5°

NA FINISH

BREAK SHARP EDGES
MAX. XX MIN. XX

OUTSTANDING ECN

Q.A. CATEGORY A-3

		DATE
DRAWN BY	JASON ORTIZ	5/16/00
CHECKED BY		
DESIGN APPROVAL		
ENGINEER APPROVAL		
SUPVR. APPROVAL		

NEXT ASSEMBLY

BROOKHAVEN NATIONAL LABORATORY
UPTON, N.Y. 11973

C-A CONTROLS WIRING DIAGRAM
E10 CST-E10-CORR2
POWER SUPPLY D19-OCT/F10_BMP

SIZE A | DRAWING NUMBER | REV. A

MATERIAL: ——— SCALE: NA WEIGHT: – SHEET 28 of 32

1 *AUTOCAD

REV.	ZONE	ECN NO.	DATE	BY	CKR	APP.

C-A Controls, Brookhaven National Laboratory 5/16/00 11:15 AM E10wfg10B.dwg

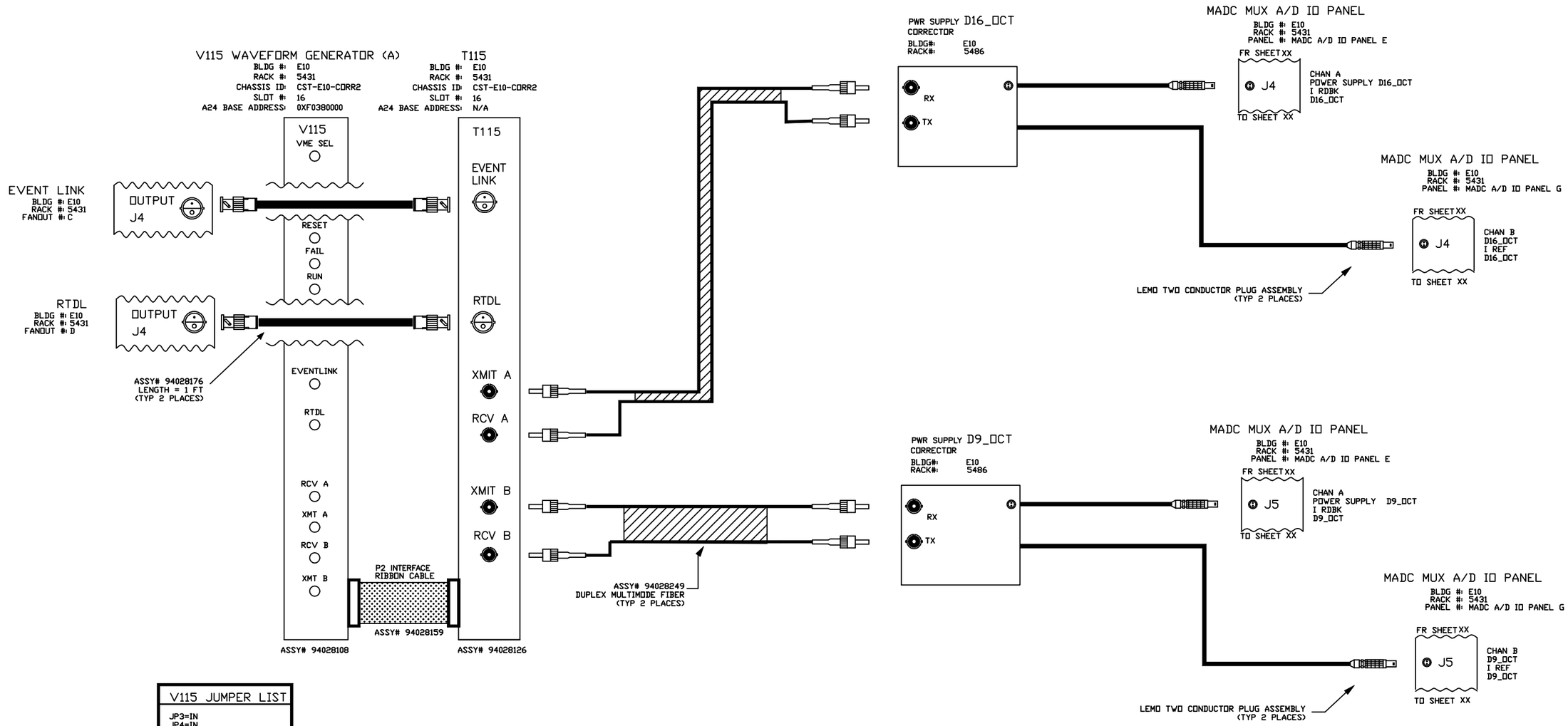

V115 JUMPER LIST
JP3=IN JP4=IN JP1=OUT JP2=OUT
A24 BASE ADDRESS JB1-A23=IN JB1-A22=IN JB1-A21=OUT JB1-A20=OUT JB1-A19=OUT JB1-A18=IN

-3	-2	-1	REF DESIGNATOR	ITEM NO.	DESCRIPTION	MAT'L DWG NO.,BNL NO.
QTY REQD						

INTERPRET IN GENERAL ACCORDANCE WITH ASME Y14.24M-1989

UNLESS OTHERWISE SPECIFIED DIMENSIONS ARE IN INCHES

DECIMAL TOLERANCES
.X ±.030
.XX ±.015
.XXX ±.005
ANGULAR TOLERANCE
± .5°

NA FINISH

BREAK SHARP EDGES
MAX. XX MIN. XX

OUTSTANDING ECN

Q.A. CATEGORY A-3

		DATE
DRAWN BY	JASON ORTIZ	5/16/00
CHECKED BY		
DESIGN APPROVAL		
ENGINEER APPROVAL		
SUPVR. APPROVAL		

NEXT ASSEMBLY

BROOKHAVEN NATIONAL LABORATORY
UPTON, N.Y. 11973

C-A CONTROLS WIRING DIAGRAM

E10 CST-E10-CORR2

POWER SUPPLY D16_OCT\D9_OCT

SIZE A | DRAWING NUMBER | REV. A

MATERIAL: ——— SCALE: NA WEIGHT: – SHEET 29 of 32

1 *AUTOCAD

REV.	ZONE	ECN NO.	DATE	BY	CKR	APP.

C-A Controls, Brookhaven National Laboratory 5/16/00 11:24 AM E10wfg11B.dwg

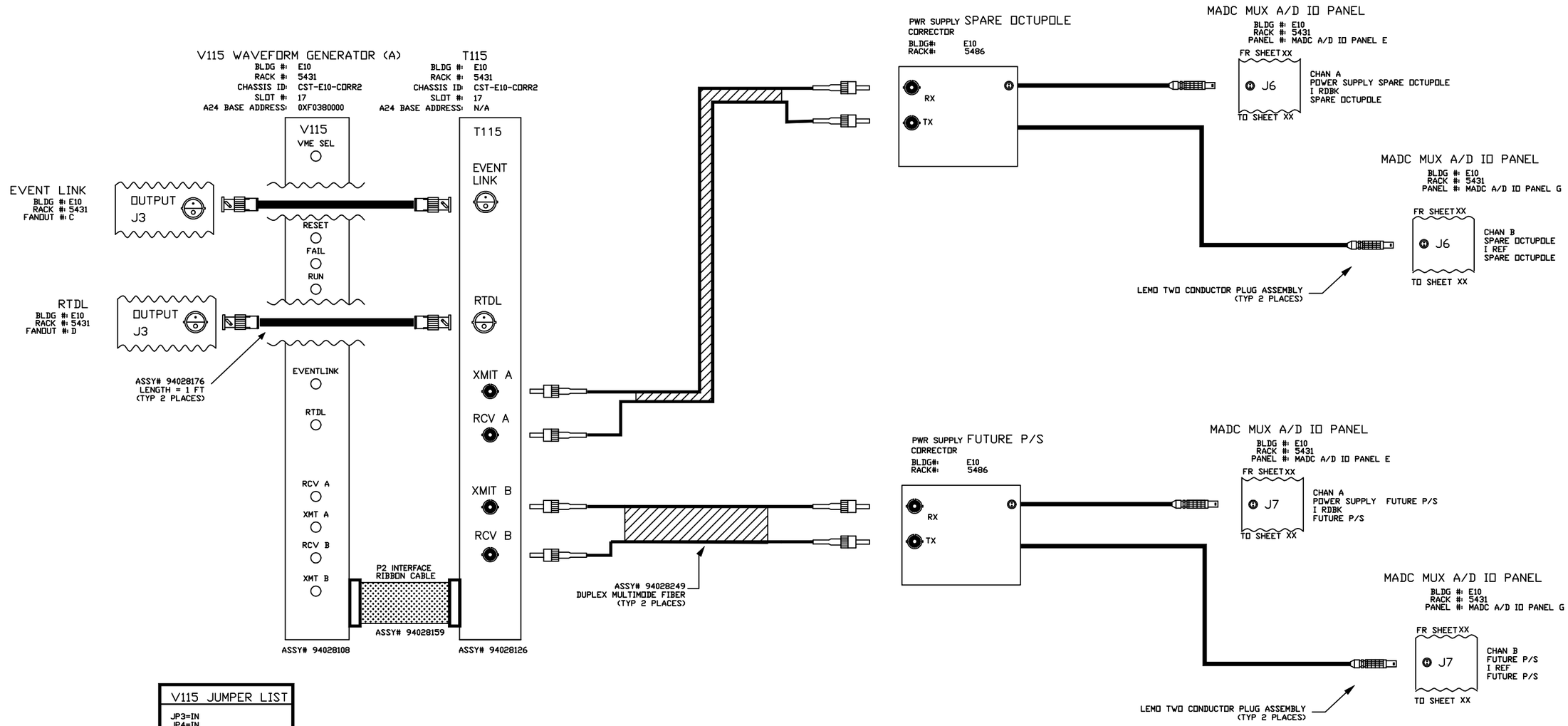

V115 JUMPER LIST
JP3=IN JP4=IN JP1=OUT JP2=OUT
A24 BASE ADDRESS JB1-A23=IN JB1-A22=IN JB1-A21=OUT JB1-A20=OUT JB1-A19=OUT JB1-A18=IN

-3	-2	-1	REF DESIGNATOR	ITEM NO.	DESCRIPTION	MAT'L DWG NO./BNL NO.
QTY REQD						

INTERPRET IN GENERAL ACCORDANCE WITH ASME Y14.24M-1989

UNLESS OTHERWISE SPECIFIED DIMENSIONS ARE IN INCHES

DECIMAL TOLERANCES
.X ±.030
.XX ±.015
.XXX ±.005
ANGULAR TOLERANCE
± .5°

NA FINISH

BREAK SHARP EDGES
MAX. XX MIN. XX

OUTSTANDING ECN

Q.A. CATEGORY A-3

		DATE
DRAWN BY	JASON ORTIZ	5/10/00
CHECKED BY		
DESIGN APPROVAL		
ENGINEER APPROVAL		
SUPVR. APPROVAL		

NEXT ASSEMBLY

BROOKHAVEN NATIONAL LABORATORY
UPTON, N.Y. 11973

C-A CONTROLS WIRING DIAGRAM

A10 CST-A10-CORR2

POWER SUPPLY SPARE OCTUPOLE

SIZE A | DRAWING NUMBER | REV. A

MATERIAL: ——— SCALE: NA WEIGHT: – SHEET 30 of 32

1 *AUTOCAD

REV.	ZONE	ECN NO.	DATE	BY	CKR	APP.

C-A Controls, Brookhaven National Laboratory 5/16/00 11:27 AM E10wfg12B.dwg

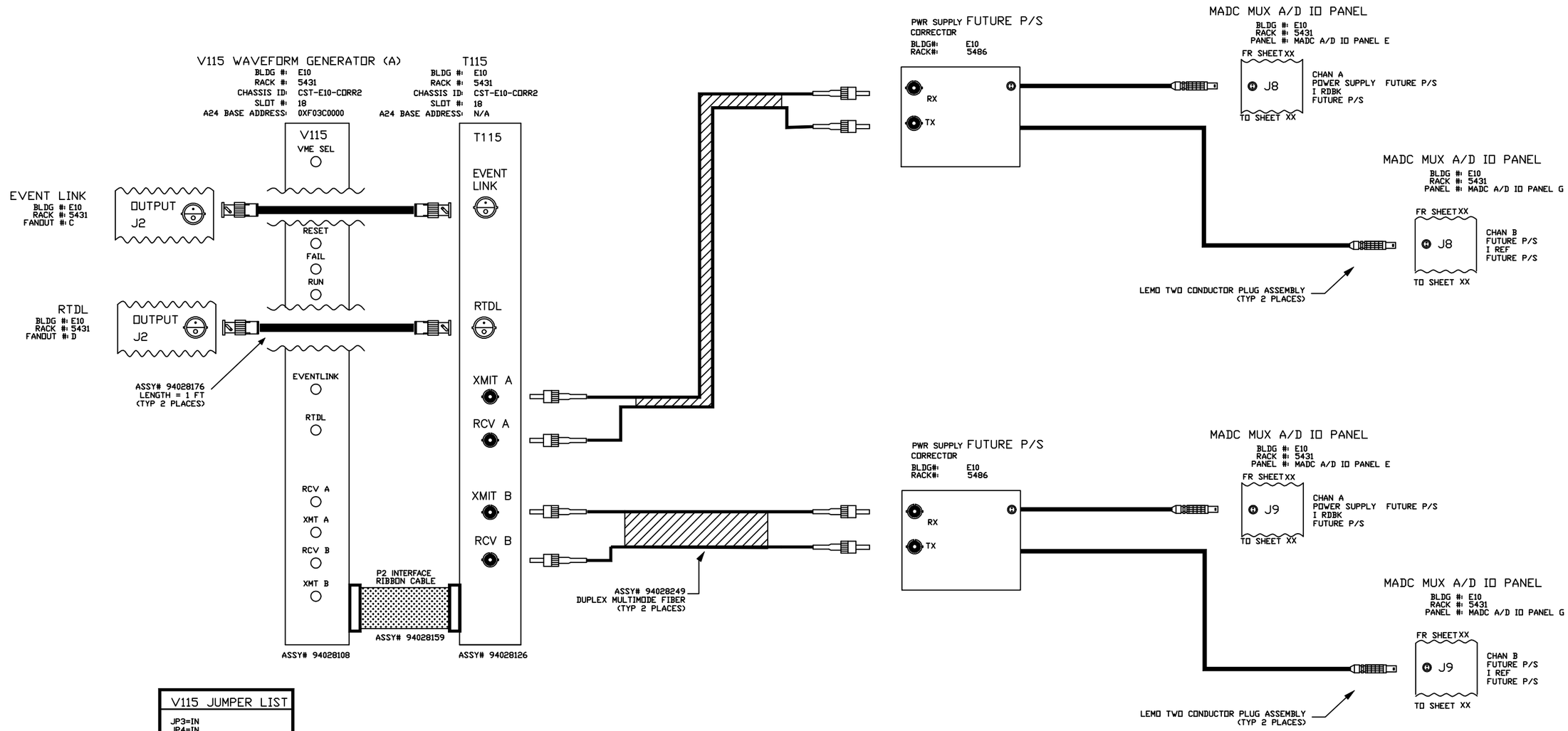

V115 JUMPER LIST
JP3=IN JP4=IN JP1=OUT JP2=OUT
A24 BASE ADDRESS JB1-A23=IN JB1-A22=IN JB1-A21=OUT JB1-A20=OUT JB1-A19=OUT JB1-A18=OUT

-3	-2	-1	REF DESIGNATOR	ITEM NO.	DESCRIPTION	MAT'L DWG NO./BNL NO.
QTY REQD						

INTERPRET IN GENERAL ACCORDANCE WITH ASME Y14.24M-1989

UNLESS OTHERWISE SPECIFIED DIMENSIONS ARE IN INCHES

DECIMAL TOLERANCES
.X ±.030
.XX ±.015
.XXX ±.005
ANGULAR TOLERANCE
± .5°

NA FINISH

BREAK SHARP EDGES
MAX. XX MIN. XX

OUTSTANDING ECN

Q.A. CATEGORY A-3

		DATE
DRAWN BY	JASON ORTIZ	5/16/00
CHECKED BY		
DESIGN APPROVAL		
ENGINEER APPROVAL		
SUPVR. APPROVAL		

NEXT ASSEMBLY

BROOKHAVEN NATIONAL LABORATORY
UPTON, N.Y. 11973

C-A CONTROLS WIRING DIAGRAM
E10 CST-E10-CORR2
POWER SUPPLY FUTURE P/S

SIZE A | DRAWING NUMBER | REV. A

MATERIAL: ——— SCALE: NA WEIGHT: — SHEET 31 of 32

*AUTOCAD

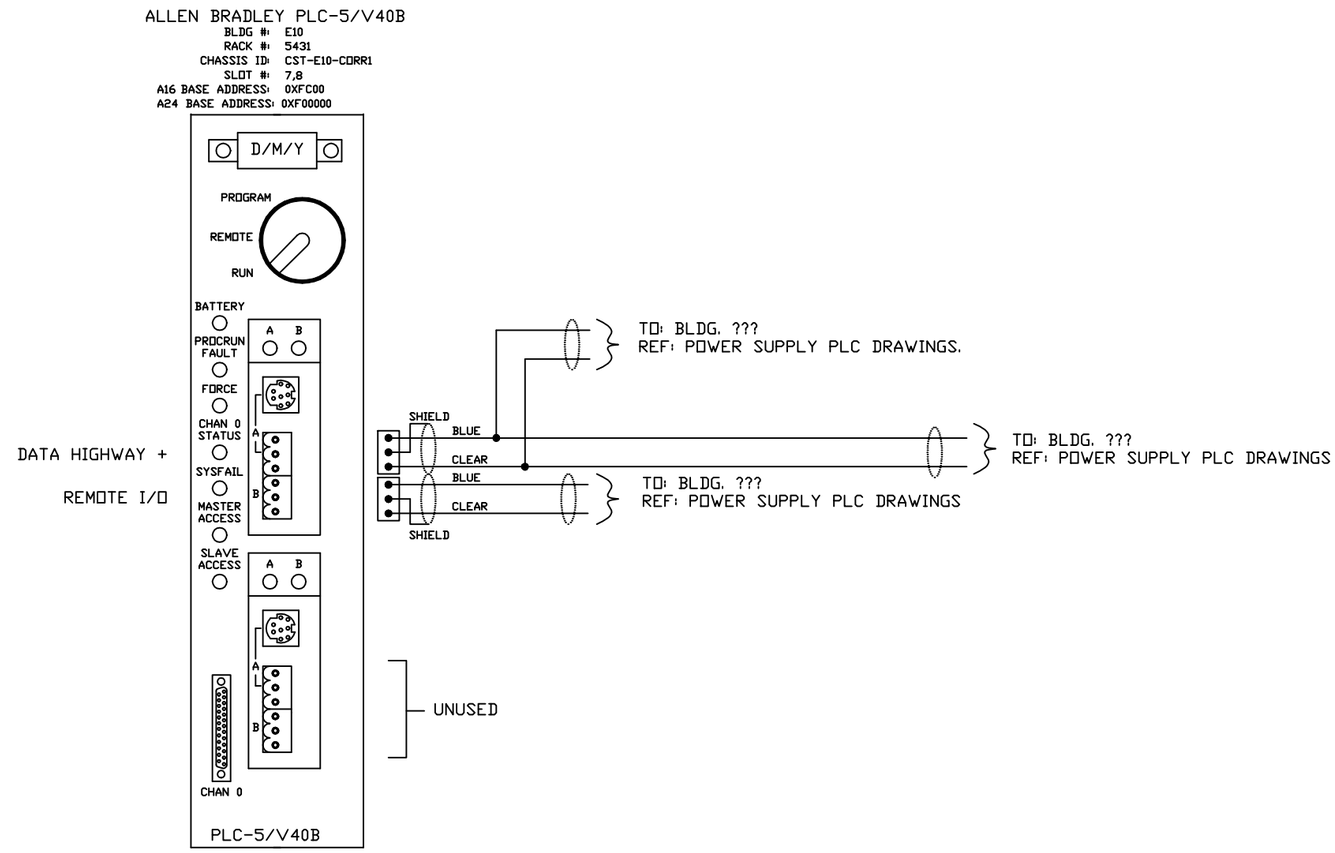

REV.	ZONE	ECN NO.	DATE	BY	CKR	APP.

-3	-2	-1	REF DESIGNATOR	ITEM NO.	DESCRIPTION	MAT'L DWG NO./BNL NO.
QTY REQD						

INTERPRET IN GENERAL ACCORDANCE WITH ASME Y14.24M-1989

UNLESS OTHERWISE SPECIFIED DIMENSIONS ARE IN INCHES

DECIMAL TOLERANCES
.X ±.030
.XX ±.015
.XXX ±.005
ANGULAR TOLERANCE
± .5°

NA FINISH

BREAK SHARP EDGES
MAX. XX MIN. XX

OUTSTANDING ECN

Q.A. CATEGORY A-3		DATE
DRAWN BY	JASON ORTIZ	5/5/00
CHECKED BY		
DESIGN APPROVAL		
ENGINEER APPROVAL		
SUPVR. APPROVAL		

NEXT ASSEMBLY

BROOKHAVEN NATIONAL LABORATORY
UPTON, N.Y. 11973

RHIC CONTROLS WIRING DIAGRAM
BLDG. E10, VME CHASSIS CST-E10-CORR1
ALLEN BRADLEY VME PLC-5

SIZE | DRAWING NUMBER | REV. A

MATERIAL: ——— SCALE: NA WEIGHT: – SHEET 32 of 32

*AUTOCAD