REV.	ZONE	ECN NO.	DATE	BY	CKR	APP.

BNL, BNL 12/27/00 3:39 PM D09-E-RD2765.dwg

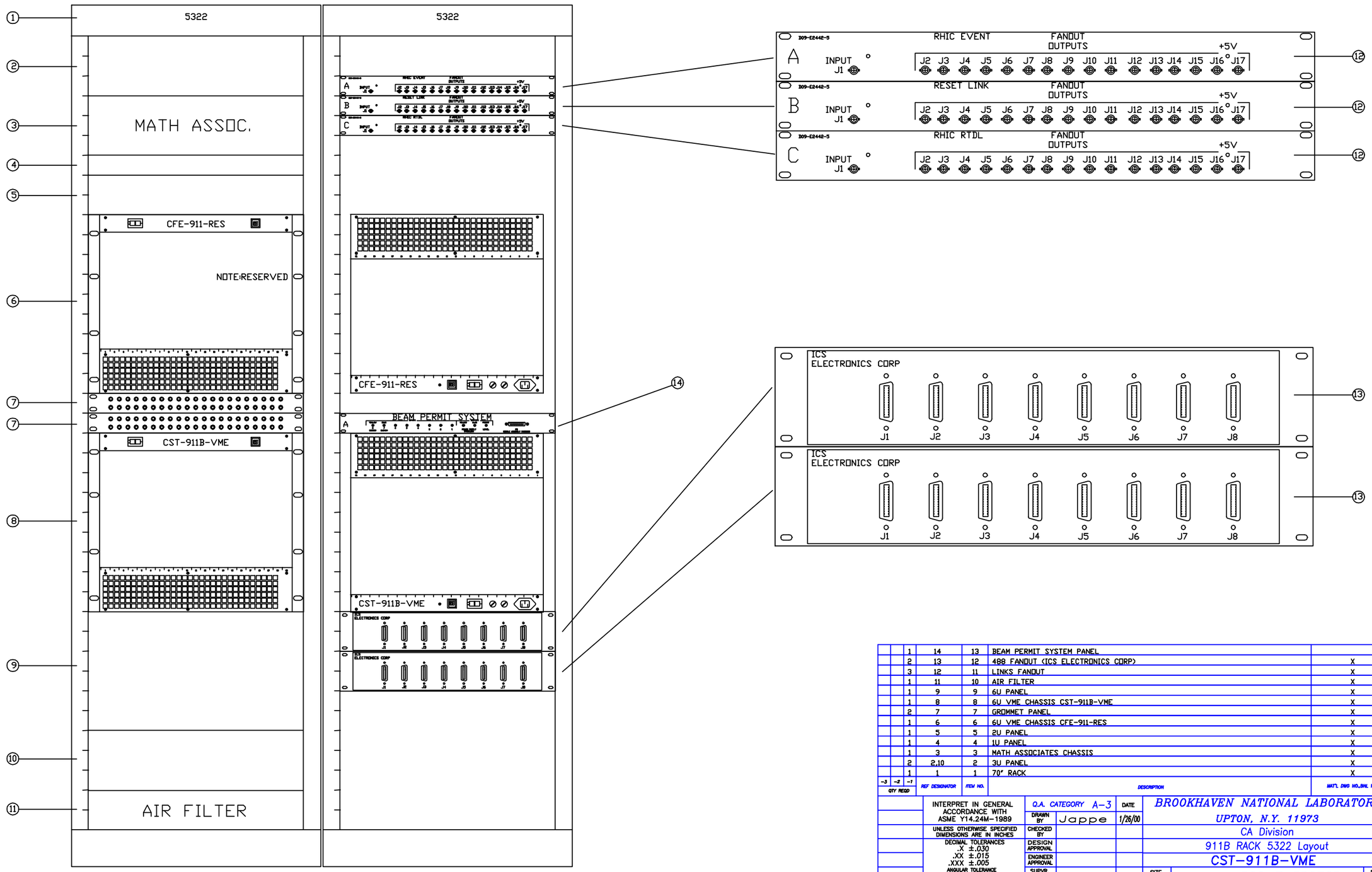

QTY REQD -3	-2	-1	REF DESIGNATOR	ITEM NO.	DESCRIPTION	MAT'L DWG NO.,BNL NO.
		1	14	13	BEAM PERMIT SYSTEM PANEL	
		2	13	12	488 FANOUT (ICS ELECTRONICS CORP)	X
		3	12	11	LINKS FANOUT	X
		1	11	10	AIR FILTER	X
		1	9	9	6U PANEL	X
		1	8	8	6U VME CHASSIS CST-911B-VME	X
		2	7	7	GROMMET PANEL	X
		1	6	6	6U VME CHASSIS CFE-911-RES	X
		1	5	5	2U PANEL	X
		1	4	4	1U PANEL	X
		1	3	3	MATH ASSOCIATES CHASSIS	X
		2	2,10	2	3U PANEL	X
		1	1	1	70" RACK	X

INTERPRET IN GENERAL ACCORDANCE WITH ASME Y14.24M-1989

UNLESS OTHERWISE SPECIFIED DIMENSIONS ARE IN INCHES

DECIMAL TOLERANCES
.X ±.030
.XX ±.015
.XXX ±.005
ANGULAR TOLERANCE
± .5°

OUTSTANDING ECN

NA FINISH

BREAK SHARP EDGES
MAX. XX MIN. XX

Q.A. CATEGORY A-3

		DATE
DRAWN BY	Jappe	1/26/00
CHECKED BY		
DESIGN APPROVAL		
ENGINEER APPROVAL		
SUPVR. APPROVAL		

NEXT ASSEMBLY

BROOKHAVEN NATIONAL LABORATORY
UPTON, N.Y. 11973
CA Division
911B RACK 5322 Layout
CST-911B-VME

SIZE A | DRAWING NUMBER D09-E-RD2765 | REV. A

MATERIAL: ——— SCALE: FULL WEIGHT: – SHEET 1

*AUTOCAD

REV.	ZONE	ECN NO.	DATE	BY	CKR	APP.

BNL, BNL 12/27/00 3:41 PM D09-E-RD2766.dwg

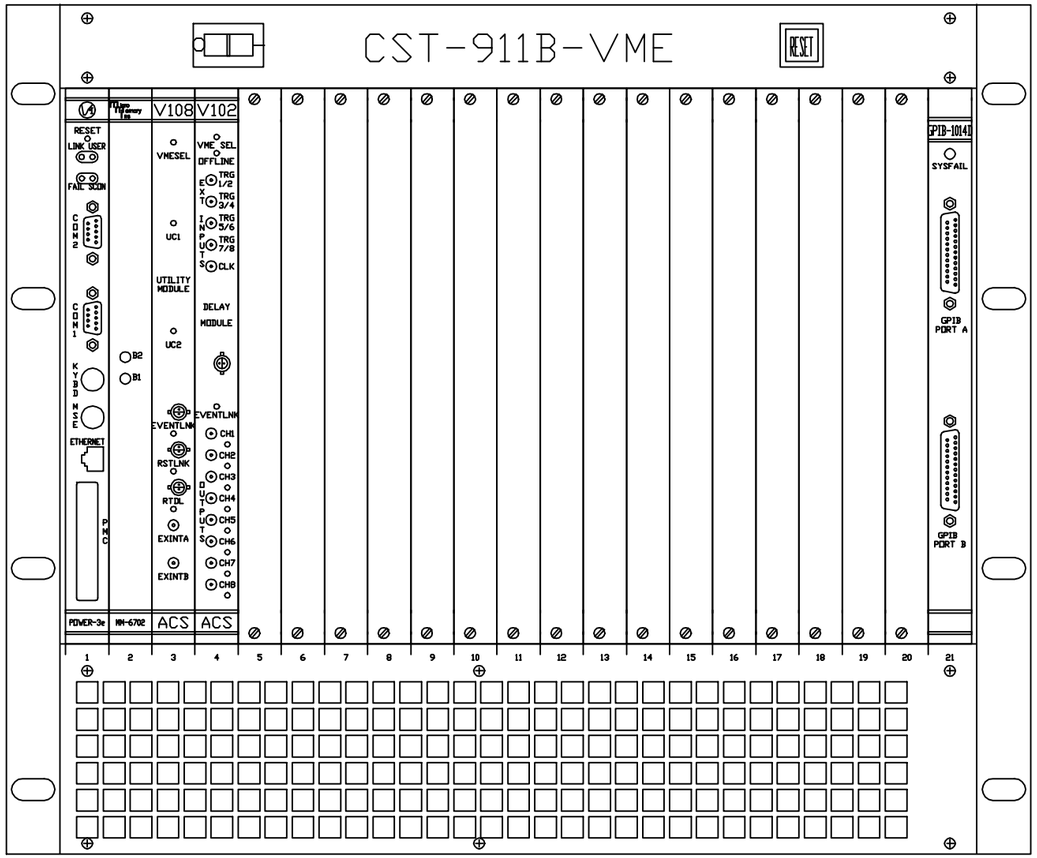

FRONT VIEW

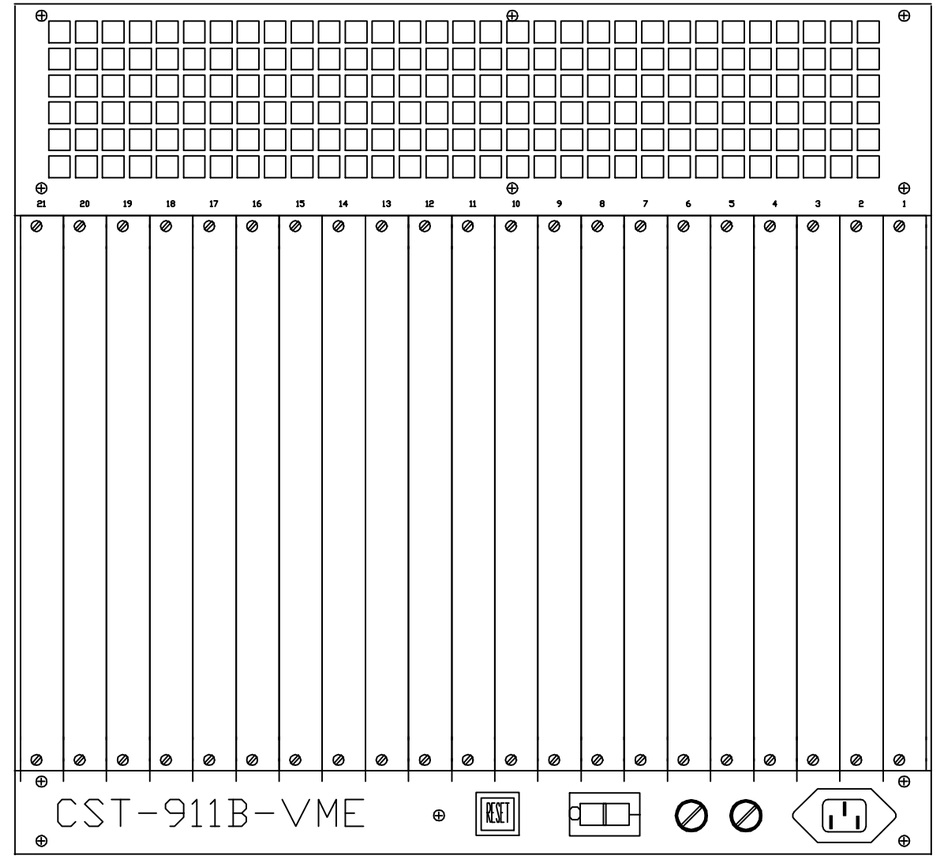

REAR VIEW

NOTE:

1. ALL UNUSED SLOTS, FRONT AND REAR

-3	-2	-1	REF DESIGNATOR	ITEM NO.	DESCRIPTION	MAT'L DWG NO.,BNL NO.
		-	-	-	-	-
		1	SLOT 21	6	ALLEN BRADLEY 1014D 488 GPIB CONTRLLER	-
		1	SLOT 4	5	V102 DELAY MODULES	94028072
		1	SLOT 3	4	V108 UTILITY MODULE	94028094
		1	SLOT 2	3	MEMORY BOARD	MM-6702
		1	SLOT 1	2	FRONT END COMPUTER	POWER3E
		1	N/A	1	VME CHASSIS	RHIC-93008000

QTY REQD

INTERPRET IN GENERAL ACCORDANCE WITH ASME Y14.24M-1989

UNLESS OTHERWISE SPECIFIED DIMENSIONS ARE IN INCHES

DECIMAL TOLERANCES
.X ±.030
.XX ±.015
.XXX ±.005
ANGULAR TOLERANCE
± .5°

OUTSTANDING ECN

NA FINISH

BREAK SHARP EDGES
MAX. XX MIN. XX

Q.A. CATEGORY A-3

		DATE
DRAWN BY	Jappe	1/18/2000
CHECKED BY		
DESIGN APPROVAL		
ENGINEER APPROVAL		
SUPVR. APPROVAL		

NEXT ASSEMBLY

BROOKHAVEN NATIONAL LABORATORY
UPTON, N.Y. 11973

CAD CONTROLS

BLDG. 911C RACK 5322

VME CHASSIS CST-911B-VME

SIZE A | DRAWING NUMBER D09-E-RD2766 | REV. A

MATERIAL: ——— SCALE: NA WEIGHT: - SHEET 2

*AUTOCAD

REV.	ZONE	ECN NO.	DATE	BY	CKR	APP.

FRONT END COMPUTER
BLDG #: 911B
RACK #: 5322
CHASSIS ID: CST-911B-VME
SLOT#: 1
FEC NAME: CST-911B-VME

DEVICE: MM-6702 MEMORY MODULE
BLDG #: 911B
RACK #: 5322
CHASSIS ID: CST-911B-VME
SLOT #: 2
A24 BASE ADDRESS: XXX

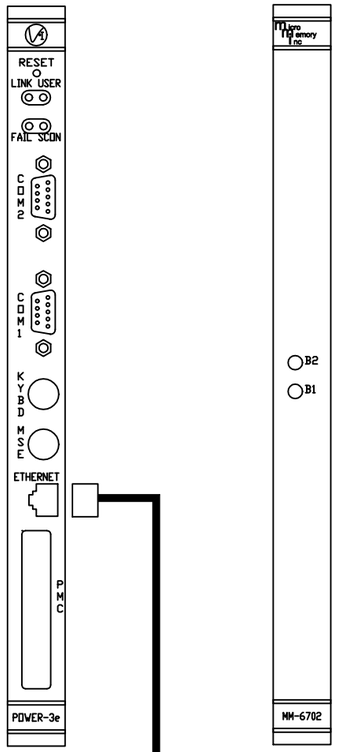

ETHERNET NETWORK
REF. NETWORK DIAGRAM

TO RACK 5035
CENTRECOM MR820TR
MULTIPORT MICRO
HUB/REPEATER
108 SUBNET J5

JUMPER LIST
1. REMOVE E1.
2. INSTALL E15.
3. SW3 CLOSE ALL POSITIONS.
4. SW2 CLOSE POSITIONS 7 AND 8.
5. SW1 CLOSE POSITIONS 2-8.
6. INSTALL E14 AND E25 TO ENABLE BATTERIES

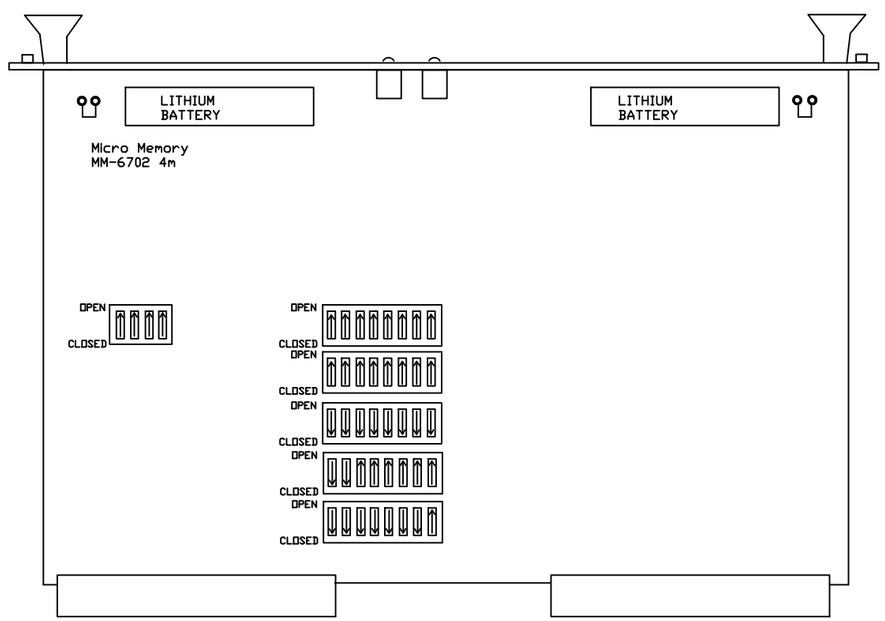

TO SET UP BOOT PARAMS FOR THE FEC
ON A X-TERM RUN StartUp
Top of StartUp

go to diagnostics
then Servers
then AGS VME stations
then pick a station you want the params for
then fec diagnostics
then Show Boot Params (PPC) (power PC)

JUMPER LIST

E25 through E50 are configured for remote reset address at the time of board acceptance test.
DO NOT MODIFY!

Remote reset pulls VME SYS Reset.
E58-E60, E59-E61

A24 BASE ADDRESS= 4000h
E57-E13, E2-E14, E3-E15, E4-E16, E5-E17, E6-E18
E7-E19, E8-E20, E9-E21, E10-E22, E11-E24, E57-E23
SW1=OPEN
SW2=CLOSED
SW3=OPEN
SW4=OPEN

DEVICE: V108 UTILITY MODULE
BLDG #: 911B
RACK #: 5322
CHASSIS ID: CST-911B-VME
SLOT #: 3
A24 BASE ADDRESS: 0XF0004000

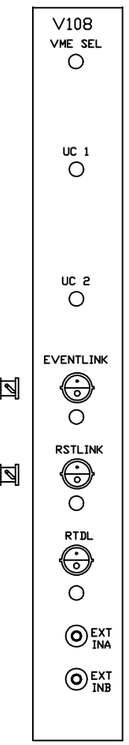

ASSY# 94028094

EVENT LINK
BLDG #: 911B
RACK #: 5035
FANOUT #: W

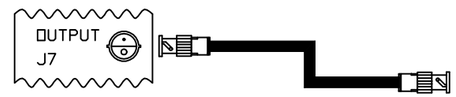

RESET LINK
BLDG #: 911B
RACK #: 5322
FANOUT #: B

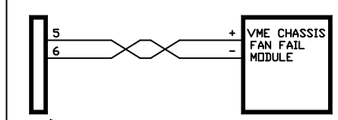

CONNECT TO P2 PINS
ON REAR OF VME CHASSIS
CABLE & CONNECTOR SUPPLIED
WITH VME CHASSIS

-3	-2	-1	REF DESIGNATOR	ITEM NO.	DESCRIPTION	MAT'L. DWG NO.,SHL NO.
QTY REQD						

INTERPRET IN GENERAL ACCORDANCE WITH ASME Y14.24M-1989
UNLESS OTHERWISE SPECIFIED DIMENSIONS ARE IN INCHES
DECIMAL TOLERANCES .X ±XXX .XX ±XXX .XXX ±XXX
ANGULAR TOLERANCE ± XXX
OUTSTANDING ECN
NA FINISH
BREAK SHARP EDGES MAX. XX MIN. XX

Q.A. CATEGORY A-3
DRAWN BY Jappe DATE 1/14/2000
CHECKED BY
DESIGN APPROVAL
ENGINEER APPROVAL
SUPVR. APPROVAL
NEXT ASSEMBLY

BROOKHAVEN NATIONAL LABORATORY
ASSOCIATED UNIVERSITIES, INC.
UPTON, N.Y. 11973

CAD WIRING DIAGRAM
911B VME CHASSIS CST-911B-VME
CPU/MEMORY /V108 UTIL MODULE

SIZE A
D09-E-RD2767
DRAWING NUMBER
REV. A

MATERIAL: ——— SCALE: NA WEIGHT: – SHEET 3

*AUTOCAD

REV.	ZONE	ECN NO.	DATE	BY	CKR	APP.

BNL, BNL 12/27/00 3:48 PM D09-E-RD2768.dwg

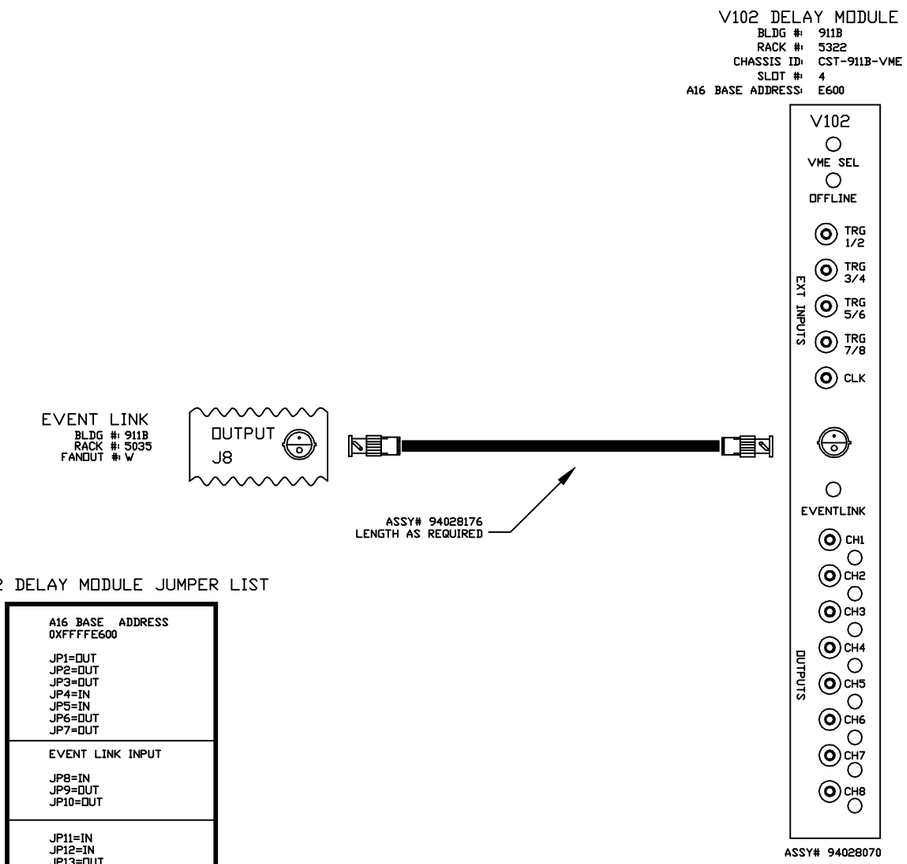

V102 DELAY MODULE JUMPER LIST

A16 BASE ADDRESS 0XFFFFE600 JP1=OUT JP2=OUT JP3=OUT JP4=IN JP5=IN JP6=OUT JP7=OUT
EVENT LINK INPUT JP8=IN JP9=OUT JP10=OUT
JP11=IN JP12=IN JP13=OUT JP14=IN

-3	-2	-1	REF DESIGNATOR	ITEM NO.	DESCRIPTION	MAT'L DWG NO./BNL NO.
QTY REQD						

INTERPRET IN GENERAL ACCORDANCE WITH ASME Y14.24M-1989

UNLESS OTHERWISE SPECIFIED DIMENSIONS ARE IN INCHES

DECIMAL TOLERANCES
.X ±XXX
.XX ±XXX
.XXX ±XXX
ANGULAR TOLERANCE
± XXX

OUTSTANDING ECN

NA FINISH

BREAK SHARP EDGES
MAX. XX MIN. XX

Q.A. CATEGORY A-3		DATE
DRAWN BY	Warren Jappe	1/14/2000
CHECKED BY		
DESIGN APPROVAL		
ENGINEER APPROVAL		
SUPVR. APPROVAL		

NEXT ASSEMBLY

BROOKHAVEN NATIONAL LABORATORY
UPTON, N.Y. 11973

CAD WIRING DIAGRAM

BLDG. 911A CHASSIS CST-911B-VME

V102 DELAY MODULE

SIZE A | D09-E-RD2768 | REV. A

DRAWING NUMBER

MATERIAL: ——— SCALE: NA WEIGHT: SHEET 4

*AUTOCAD

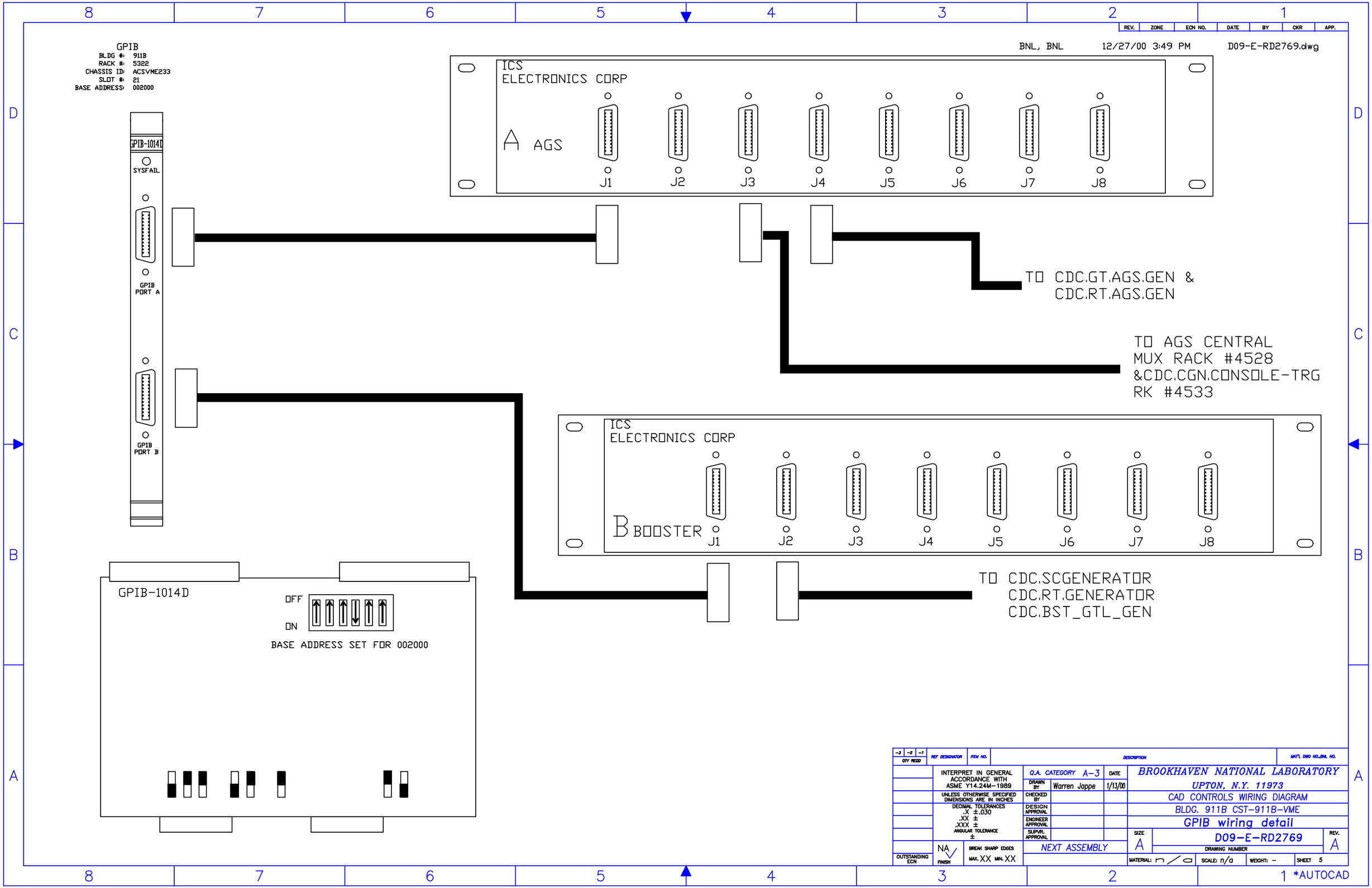

GPIB
BLDG #: 911B
RACK #: 5322
CHASSIS ID: ACSVME233
SLOT #: 21
BASE ADDRESS: 002000
BNL, BNL 12/27/00 3:49 PM D09-E-RD2769.dwg
GPIB-1014D
SYSFAIL
GPIB PORT A
GPIB PORT B
ICS
ELECTRONICS CORP
A AGS
J1 J2 J3 J4 J5 J6 J7 J8
TO CDC.GT.AGS.GEN &
CDC.RT.AGS.GEN
TO AGS CENTRAL
MUX RACK #4528
&CDC.CGN.CONSOLE-TRG
RK #4533
ICS
ELECTRONICS CORP
B BOOSTER
J1 J2 J3 J4 J5 J6 J7 J8
TO CDC.SCGENERATOR
CDC.RT.GENERATOR
CDC.BST_GTL_GEN
GPIB-1014D
OFF
ON
BASE ADDRESS SET FOR 002000
REV. ZONE ECN NO. DATE BY CKR APP.
-3 -2 -1 QTY REQD
REF DESIGNATOR
ITEM NO.
DESCRIPTION
MAT'L DWG NO.,BNL NO.
INTERPRET IN GENERAL ACCORDANCE WITH ASME Y14.24M-1989
UNLESS OTHERWISE SPECIFIED DIMENSIONS ARE IN INCHES
DECIMAL TOLERANCES
.X ±.030
.XX ±
.XXX ±
ANGULAR TOLERANCE
±
OUTSTANDING ECN
NA
FINISH
BREAK SHARP EDGES
MAX. XX MIN. XX
Q.A. CATEGORY A-3
DATE
DRAWN BY Warren Jappe 1/13/00
CHECKED BY
DESIGN APPROVAL
ENGINEER APPROVAL
SUPVR. APPROVAL
NEXT ASSEMBLY
BROOKHAVEN NATIONAL LABORATORY
UPTON, N.Y. 11973
CAD CONTROLS WIRING DIAGRAM
BLDG. 911B CST-911B-VME
GPIB wiring detail
SIZE A
D09-E-RD2769
DRAWING NUMBER
REV. A
MATERIAL: n/a
SCALE: n/a
WEIGHT: -
SHEET 5
1 *AUTOCAD

REV.	ZONE	ECN NO.	DATE	BY	CKR	APP.

BNL, BNL 12/27/00 3:51 PM D09-E-RD2770.dwg

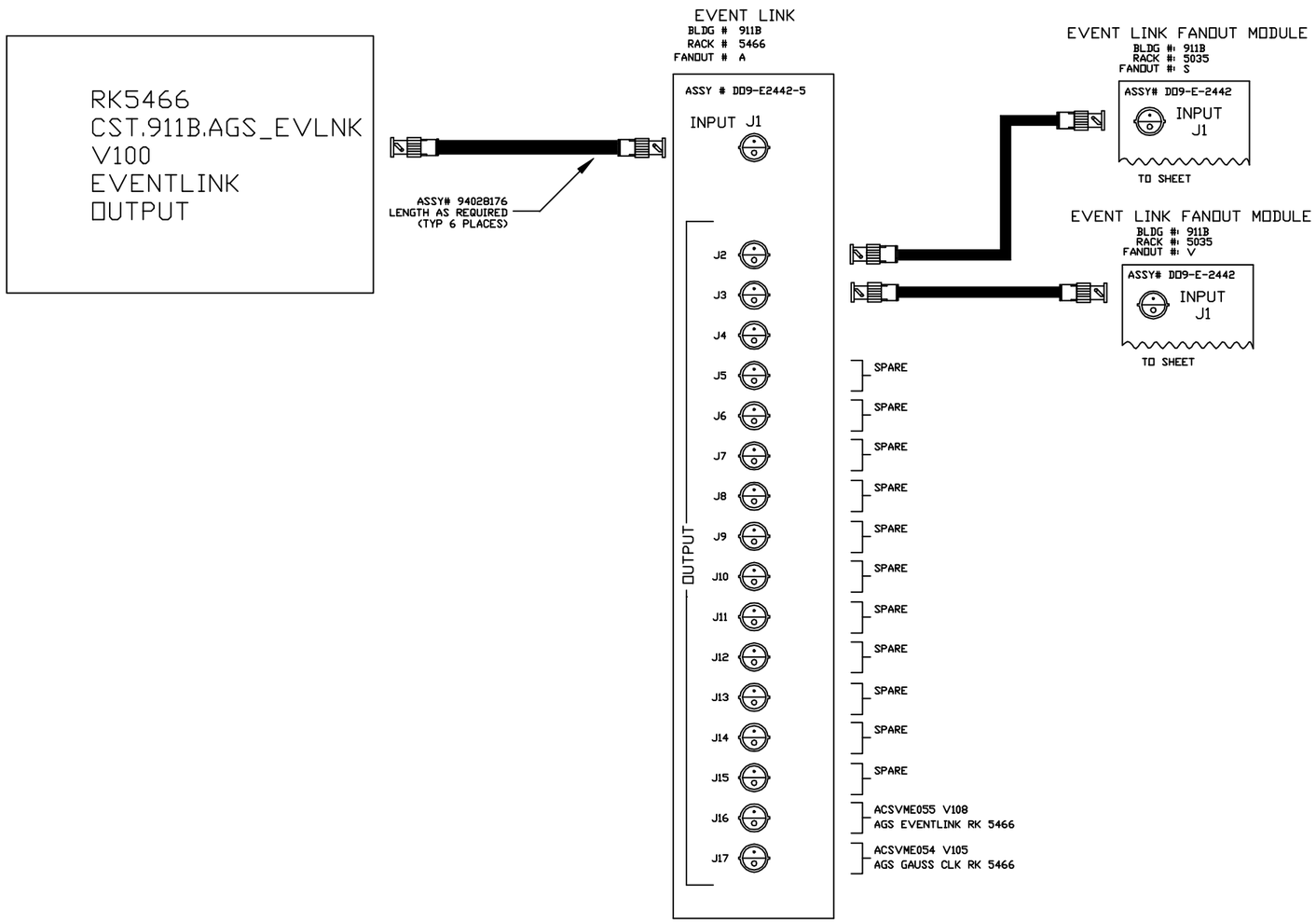

-3	-2	-1	REF DESIGNATOR	ITEM NO.	DESCRIPTION	MAT'L DWG NO.,BNL NO.
QTY REQD						

INTERPRET IN GENERAL ACCORDANCE WITH ASME Y14.24M-1989

UNLESS OTHERWISE SPECIFIED DIMENSIONS ARE IN INCHES

DECIMAL TOLERANCES
.X ±.030
.XX ±.015
.XXX ±.005
ANGULAR TOLERANCE
± .5°

NA FINISH

BREAK SHARP EDGES
MAX. XX MIN. XX

OUTSTANDING ECN

Q.A. CATEGORY A-3		DATE
DRAWN BY	Warren Jappe	1/26/00
CHECKED BY		
DESIGN APPROVAL		
ENGINEER APPROVAL		
SUPVR. APPROVAL		

NEXT ASSEMBLY

BROOKHAVEN NATIONAL LABORATORY
UPTON, N.Y. 11973

CAD WIRING DIAGRAM

911B STATION

EVENT LINK

SIZE A | D09-E-RD2770 | REV. A

DRAWING NUMBER

MATERIAL: ——— SCALE: NA WEIGHT: — SHEET 6

*AUTOCAD

BNL, BNL 12/28/00 2:10 PM D09-E-RD2771.dwg

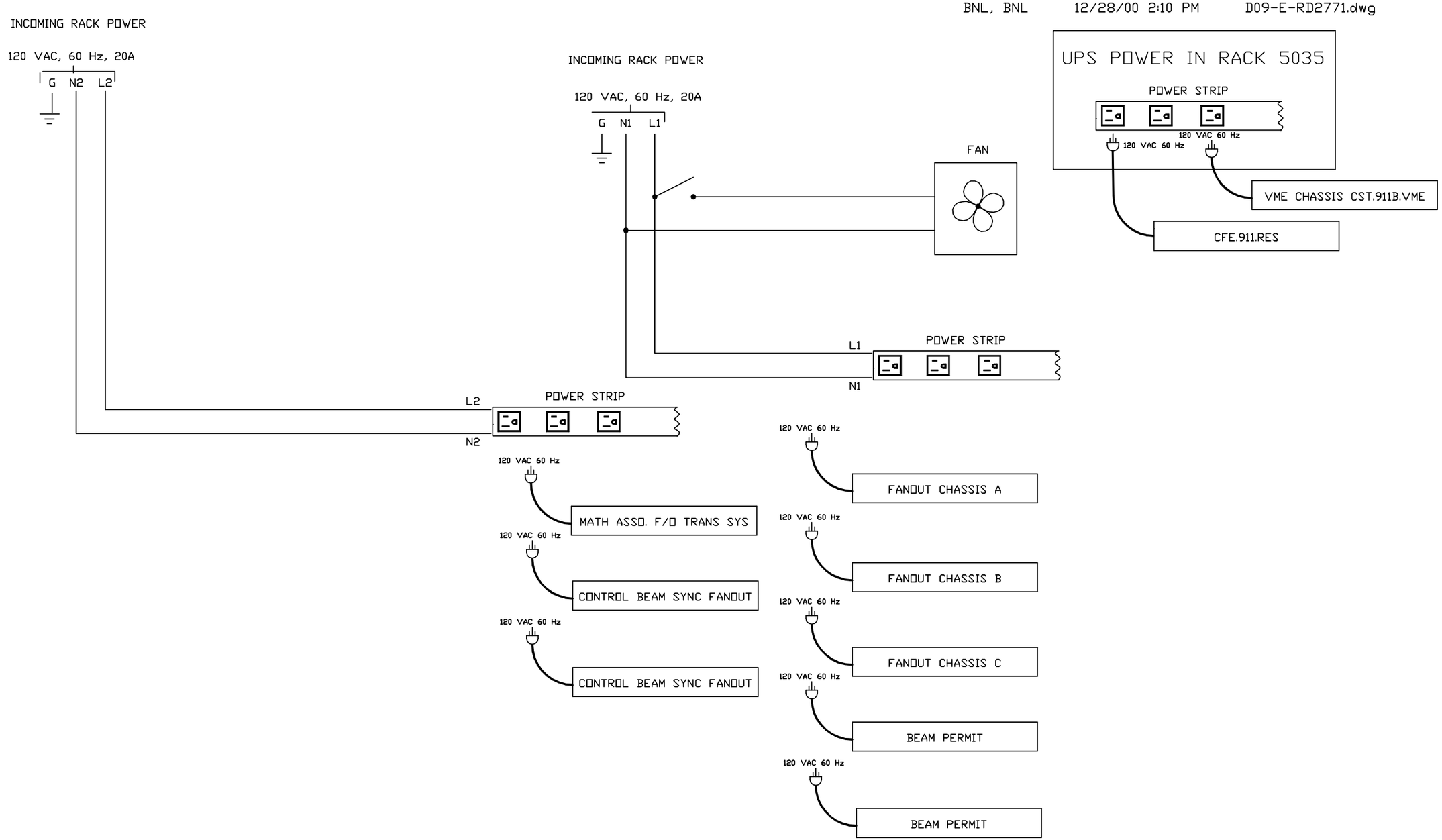

NOTE: ALL 120 VAC, 60 Hz POWER CORDS
PLUG INTO POWER STRIP OUTLETS EXCEPT FOR 6U VME CHASSIS

REV.	ZONE	ECN NO.	DATE	BY	CKR	APP.

-3	-2	-1	REF DESIGNATOR	ITEM NO.	DESCRIPTION	MAT'L DWG NO./BNL NO.
QTY REQD						

INTERPRET IN GENERAL ACCORDANCE WITH ASME Y14.24M-1989
UNLESS OTHERWISE SPECIFIED DIMENSIONS ARE IN INCHES
DECIMAL TOLERANCES .X ±.030 .XX ±.015 .XXX ±.005 ANGULAR TOLERANCE ± .5°
FINISH NA
BREAK SHARP EDGES MAX. XX MIN. XX
OUTSTANDING ECN

Q.A. CATEGORY A-3
DRAWN BY Jappe DATE 3/22/00
CHECKED BY
DESIGN APPROVAL
ENGINEER APPROVAL
SUPVR. APPROVAL
NEXT ASSEMBLY

BROOKHAVEN NATIONAL LABORATORY
ASSOCIATED UNIVERSITIES, INC.
UPTON, N.Y. 11973

CAD WIRING DIAGRAM
RACK 5322
POWER DISTRIBUTION

SIZE
DRAWING NUMBER D09-E-RD2771
REV.
MATERIAL: ——— SCALE: NA WEIGHT: SHEET 8

*AUTOCAD