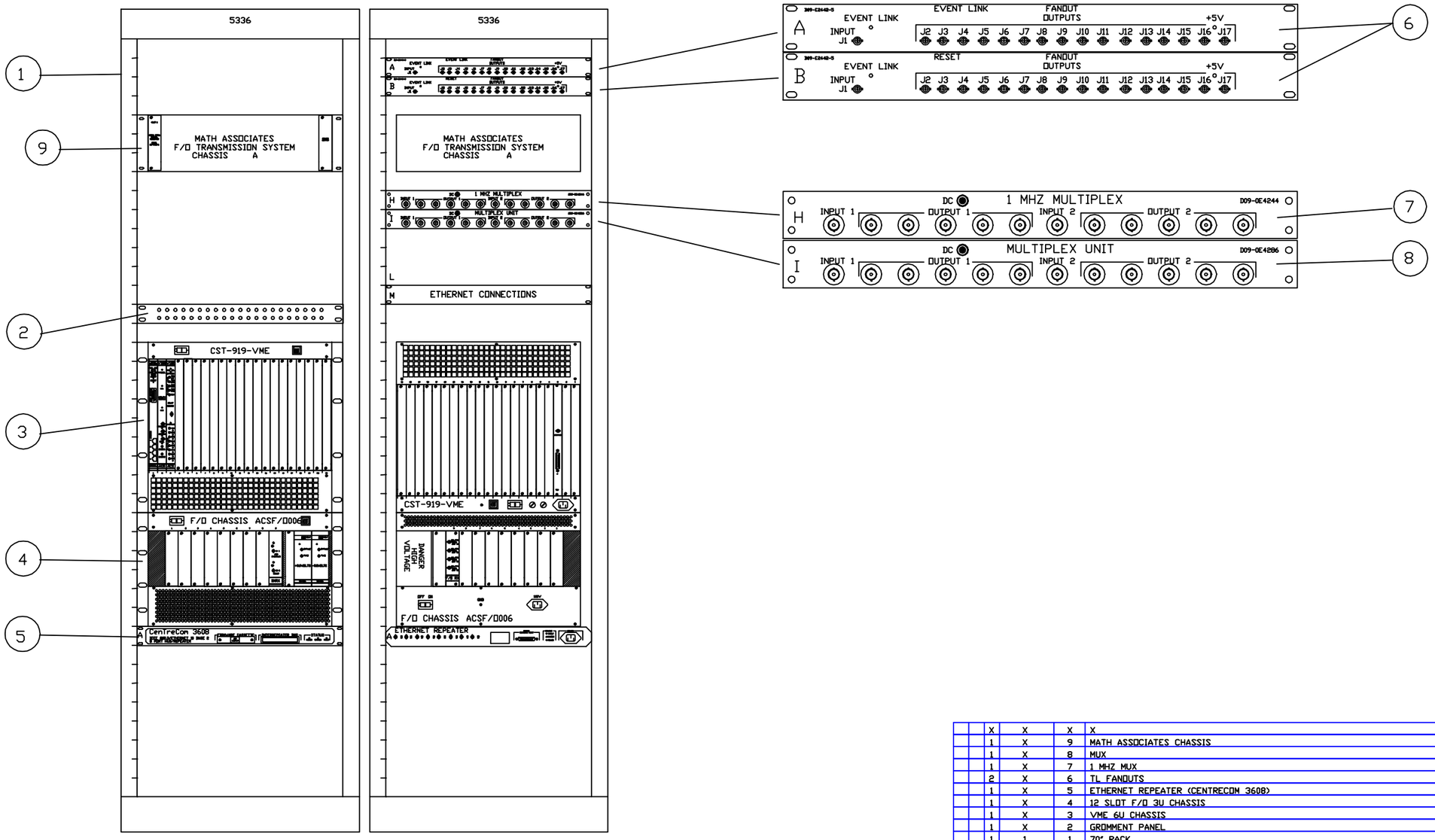

		X	X	X	X	X
		1	X	9	MATH ASSOCIATES CHASSIS	X
		1	X	8	MUX	D09-OE4286
		1	X	7	1 MHZ MUX	D09-OE4244
		2	X	6	TL FANOUTS	X
		1	X	5	ETHERNET REPEATER (CENTRECOM 3608)	X
		1	X	4	12 SLOT F/O 3U CHASSIS	X
		1	X	3	VME 6U CHASSIS	X
		1	X	2	GROMMENT PANEL	X
		1	1	1	70" RACK	X
-3	-2	-1	REF DESIGNATOR	ITEM NO.	DESCRIPTION	MATL DWG NO.,BAL NO.
QTY REQD						

INTERPRET IN GENERAL ACCORDANCE WITH ASME Y14.24M-1989

UNLESS OTHERWISE SPECIFIED DIMENSIONS ARE IN INCHES

DECIMAL TOLERANCES
.X ±.030
.XX ±.015
.XXX ±.005
ANGULAR TOLERANCE
± .5°

NA FINISH

BREAK SHARP EDGES
MAX. XX MIN. XX

OUTSTANDING ECN

Q.A. CATEGORY A-3

DRAWN BY	Venegas	12/29/97
CHECKED BY		
DESIGN APPROVAL		
ENGINEER APPROVAL		
SUPVR. APPROVAL		

NEXT ASSEMBLY

BROOKHAVEN NATIONAL LABORATORY
ASSOCIATED UNIVERSITIES, INC.
UPTON, N.Y. 11973

RACK LAYOUT FOR 919
CONTROL SYSTEM

SIZE D
D09-E-RD2898
DRAWING NUMBER
REV. A

MATERIAL: ——— SCALE: FULL WEIGHT: – SHEET 1

FILE "919STN.DWG"

*AUTOCAD

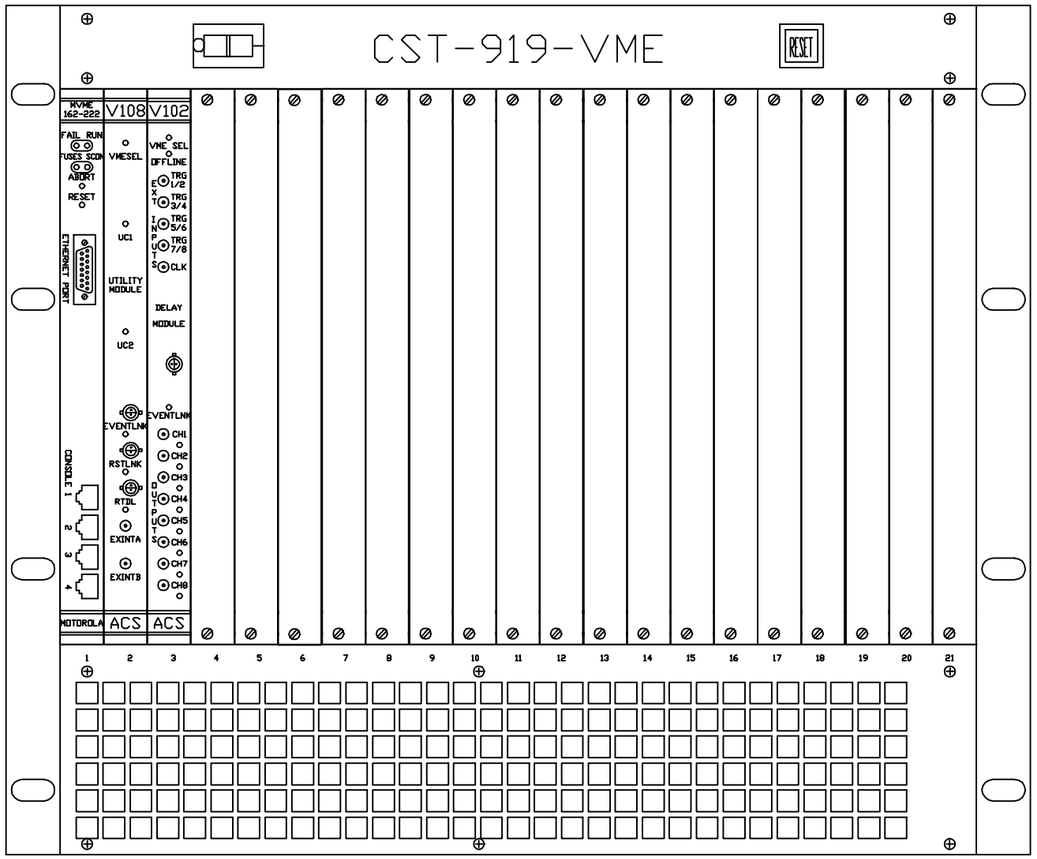

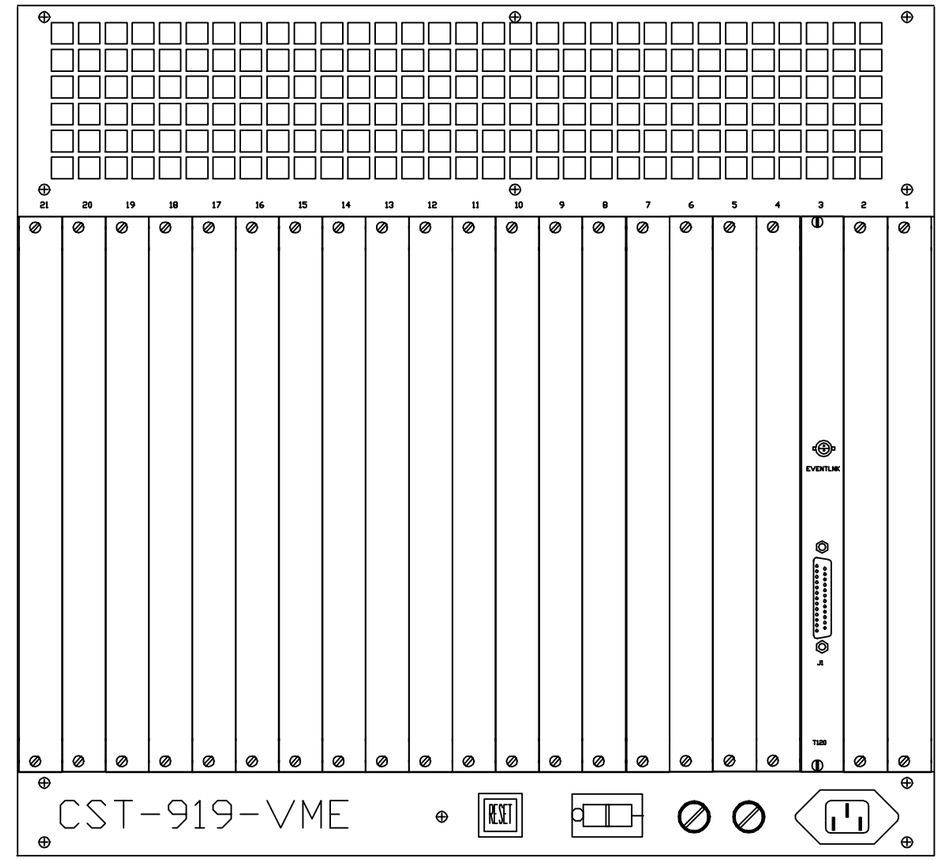

NOTE 1: FOR UNUSED SLOTS

-3	-2	-1	REF DESIGNATOR	ITEM NO.	DESCRIPTION	MAT'L DWG NO./BNL NO.
		X	X	X	X	X
		38	NOTE 1	8	6U FILLER PANELS	X
		1	SLOT 3 R	7	T120 TRANSITION MODULE	X
		X	X	X	X	X
		X	X	X	X	X
		1	SLOT 3	4	V102 DECODER MODULE	94028070
		1	SLOT 2	3	V108 UTILITY MODULE	94028094
		1	SLOT 1	2	FRONT END COMPUTER (162-222)	X
		1	N/A	1	6U VME CHASSIS	RHIC-93008000

QTY REQD

INTERPRET IN GENERAL ACCORDANCE WITH ASME Y14.24M-1989

UNLESS OTHERWISE SPECIFIED DIMENSIONS ARE IN INCHES
DECIMAL TOLERANCES
.X ±.030
.XX ±.015
.XXX ±.005
ANGULAR TOLERANCE ± .5°

OUTSTANDING ECN

NA FINISH

BREAK SHARP EDGES MAX. XX MIN. XX

Q.A. CATEGORY A-3

		DATE
DRAWN BY	VENEGAS	12/30/97
CHECKED BY		
DESIGN APPROVAL		
ENGINEER APPROVAL		
SUPVR. APPROVAL		

NEXT ASSEMBLY

BROOKHAVEN NATIONAL LABORATORY
ASSOCIATED UNIVERSITIES, INC.
UPTON, N.Y. 11973

VME CONTROL CHASSIS
919

SIZE D
D09-E-RD2894
DRAWING NUMBER
REV.

MATERIAL: SCALE: WEIGHT: SHEET 2

FILE "919CST.DWG"

1 *AUTOCAD

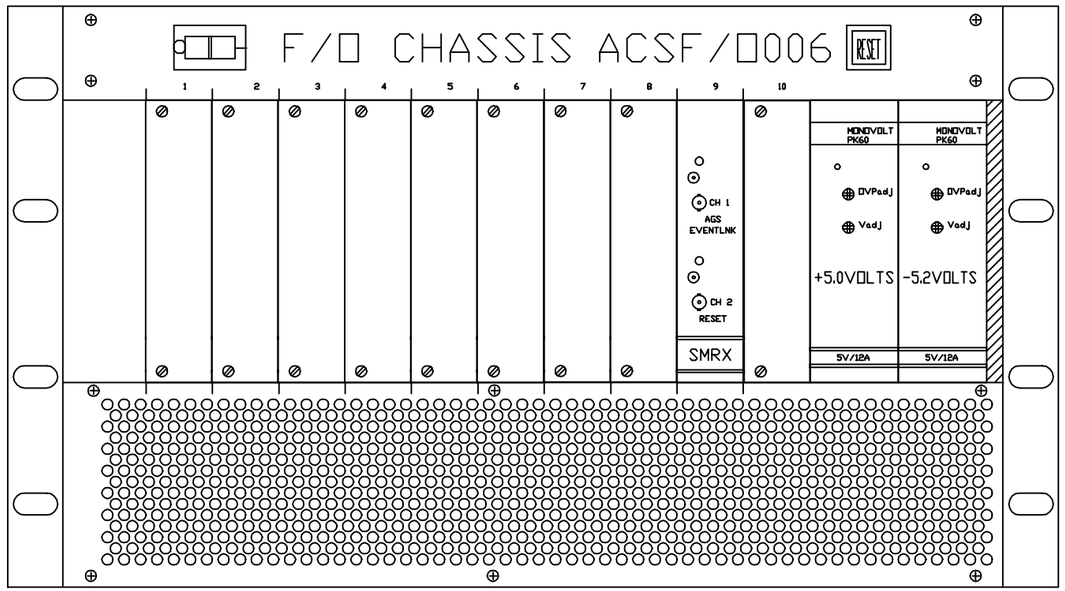

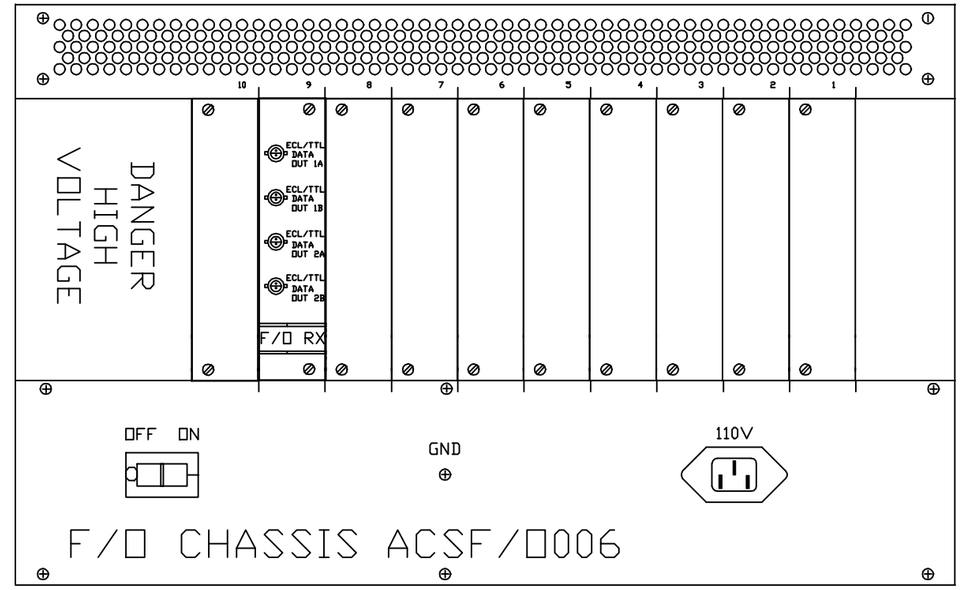

NOTE 1: FILLER PANELS FOR UNUSED SLOTS

-3	-2	-1	REF DESIGNATOR	ITEM NO.	DESCRIPTION	MAT'L DWG NO./BNL NO.
		X	X	X	X	X
		X	X	X	X	X
		18	NOTE 1	6	3UX 6HP BLANK PANEL	ESFE-3032
		1	SLOT 12	5	MONOVOLT P.S. -5.2V	X
		1	SLOT 11	4	MONOVOLT P.S. +5V	X
		1	SLOT 9 R	3	3U F/O RX TRANSITION MODULE (TTL)	D09-E2542
		1	SLOT 9	2	F/O SMRX	94028101
		1	X	1	12 SLOT 3U F/O CHASSIS	94028261

QTY REQD

INTERPRET IN GENERAL ACCORDANCE WITH ASME Y14.24M-1989

UNLESS OTHERWISE SPECIFIED DIMENSIONS ARE IN INCHES

DECIMAL TOLERANCES
.030 .X ±
.015 .XX ±
.005 .XXX ±
ANGULAR TOLERANCE
.5° ±

OUTSTANDING ECN

NA FINISH

BREAK SHARP EDGES MAX. XX MIN. XX

Q.A. CATEGORY A-3

DRAWN BY Venegas 12/30/97

CHECKED BY

DESIGN APPROVAL

ENGINEER APPROVAL

SUPVR. APPROVAL

DATE

NEXT ASSEMBLY

BROOKHAVEN NATIONAL LABORATORY
ASSOCIATED UNIVERSITIES, INC.
UPTON, N.Y. 11973

919 F/O CHASSIS

SIZE D09-E-RD2896 REV. A

DRAWING NUMBER

MATERIAL: FULL SCALE: - WEIGHT: 3 SHEET

FILE "919F_O.DWG"

1 *AUTOCAD

REV.	ZONE	ECN NO.	DATE	BY	CKR	APP.

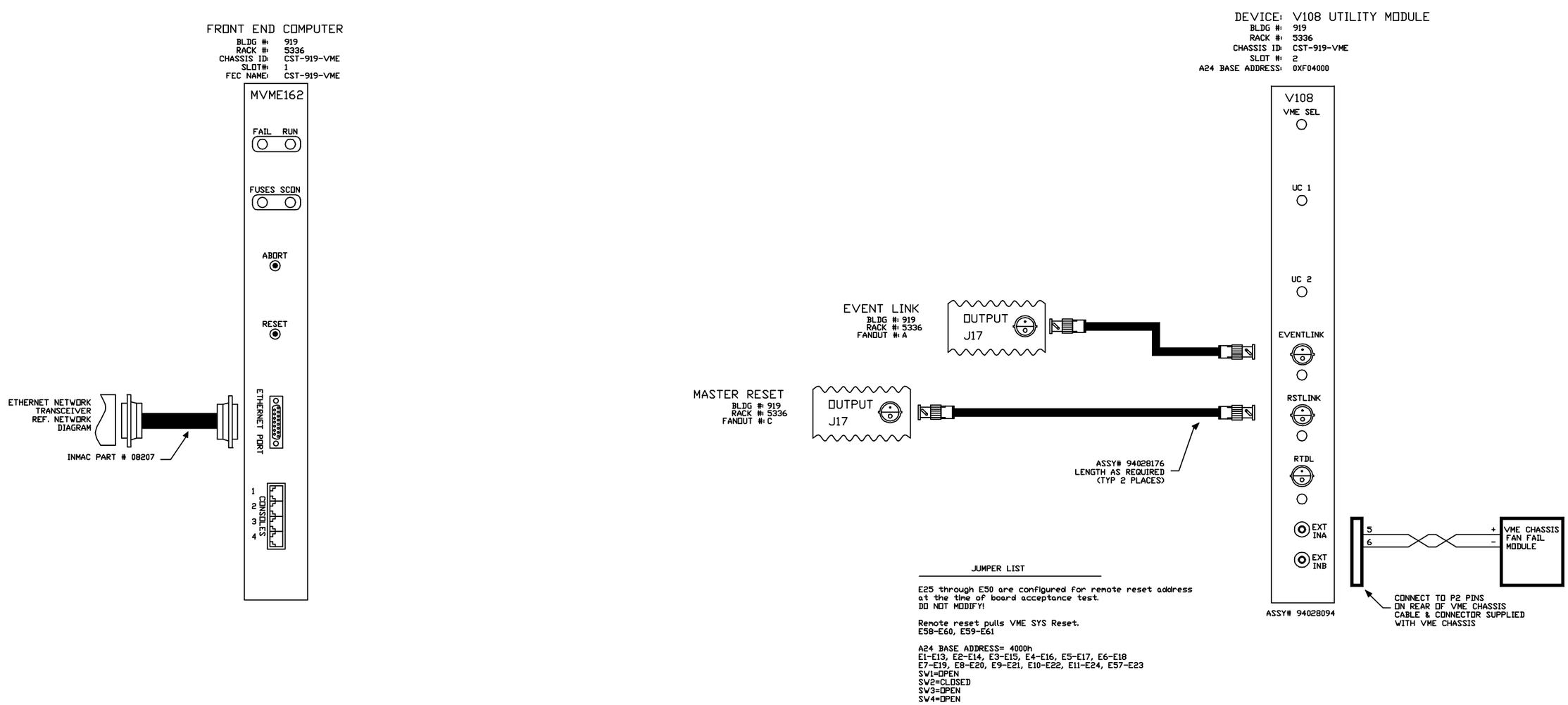

JUMPER LIST

E25 through E50 are configured for remote reset address at the time of board acceptance test.
DO NOT MODIFY!

Remote reset pulls VME SYS Reset.
E58-E60, E59-E61

A24 BASE ADDRESS= 4000h
E1-E13, E2-E14, E3-E15, E4-E16, E5-E17, E6-E18
E7-E19, E8-E20, E9-E21, E10-E22, E11-E24, E57-E23
SW1=OPEN
SW2=CLOSED
SW3=OPEN
SW4=OPEN

919_V108.DWG

-3	-2	-1	REF DESIGNATOR	ITEM NO.	DESCRIPTION	MAT'L DWG NO./BNL NO.
QTY REQD						

INTERPRET IN GENERAL ACCORDANCE WITH ASME Y14.24M-1989

UNLESS OTHERWISE SPECIFIED DIMENSIONS ARE IN INCHES

DECIMAL TOLERANCES
.X ±.030
.XX ±.015
.XXX ±.005
ANGULAR TOLERANCE
± .5°

NA FINISH

BREAK SHARP EDGES
MAX. XX MIN. XX

OUTSTANDING ECN

Q.A. CATEGORY A-3

		DATE
DRAWN BY	VENEGAS	12/29/97
CHECKED BY		
DESIGN APPROVAL		
ENGINEER APPROVAL		
SUPVR. APPROVAL		

NEXT ASSEMBLY

BROOKHAVEN NATIONAL LABORATORY
ASSOCIATED UNIVERSITIES, INC.
UPTON, N.Y. 11973

AGS CONTROLS WIRING DIAGRAM
VME CHASSIS CST-919-VME
FT END COMP/V108 UTIL MODULE

SIZE D
D09-E-RD2893
DRAWING NUMBER
REV. A

MATERIAL: ——— SCALE: NA WEIGHT: – SHEET 4

*AUTOCAD

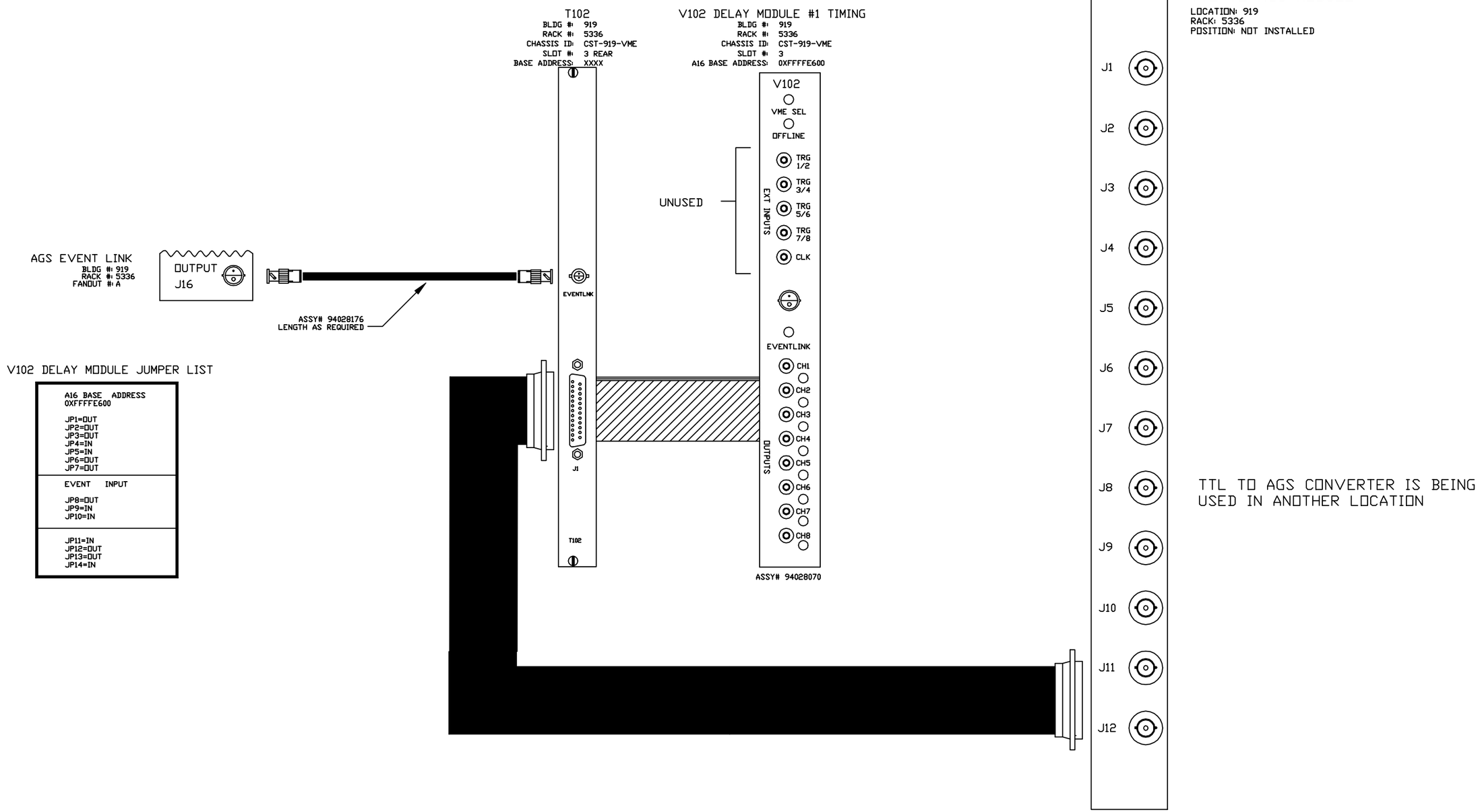

V102 DELAY MODULE JUMPER LIST

A16 BASE ADDRESS 0XFFFFE600 JP1=OUT JP2=OUT JP3=OUT JP4=IN JP5=IN JP6=OUT JP7=OUT
EVENT INPUT JP8=OUT JP9=IN JP10=IN
JP11=IN JP12=OUT JP13=OUT JP14=IN

FILE "919_102.DWG"

REV.	ZONE	ECN NO.	DATE	BY	CKR	APP.

-3	-2	-1	REF DESIGNATOR	ITEM NO.	DESCRIPTION	MAT'L DWG NO./BNL NO.
QTY REQD						

INTERPRET IN GENERAL ACCORDANCE WITH ASME Y14.24M-1989

UNLESS OTHERWISE SPECIFIED DIMENSIONS ARE IN INCHES

DECIMAL TOLERANCES
.X ±.030
.XX ±.015
.XXX ±.005
ANGULAR TOLERANCE
± .5°

OUTSTANDING ECN

NA FINISH

BREAK SHARP EDGES
MAX. XX MIN. XX

Q.A. CATEGORY A-3		DATE
DRAWN BY	VENEGAS	12/30/97
CHECKED BY		
DESIGN APPROVAL		
ENGINEER APPROVAL		
SUPVR. APPROVAL		

NEXT ASSEMBLY

BROOKHAVEN NATIONAL LABORATORY
ASSOCIATED UNIVERSITIES, INC.
UPTON, N.Y. 11973

AGS CONTROLS WIRING DIAGRAM
CST-919-VME
V102 DELAY MODULE #1 TIMING

SIZE D
DRAWING NUMBER D09-E-RD2892
REV. A

MATERIAL: ——— SCALE: NA WEIGHT: – SHEET 5

1 *AUTOCAD

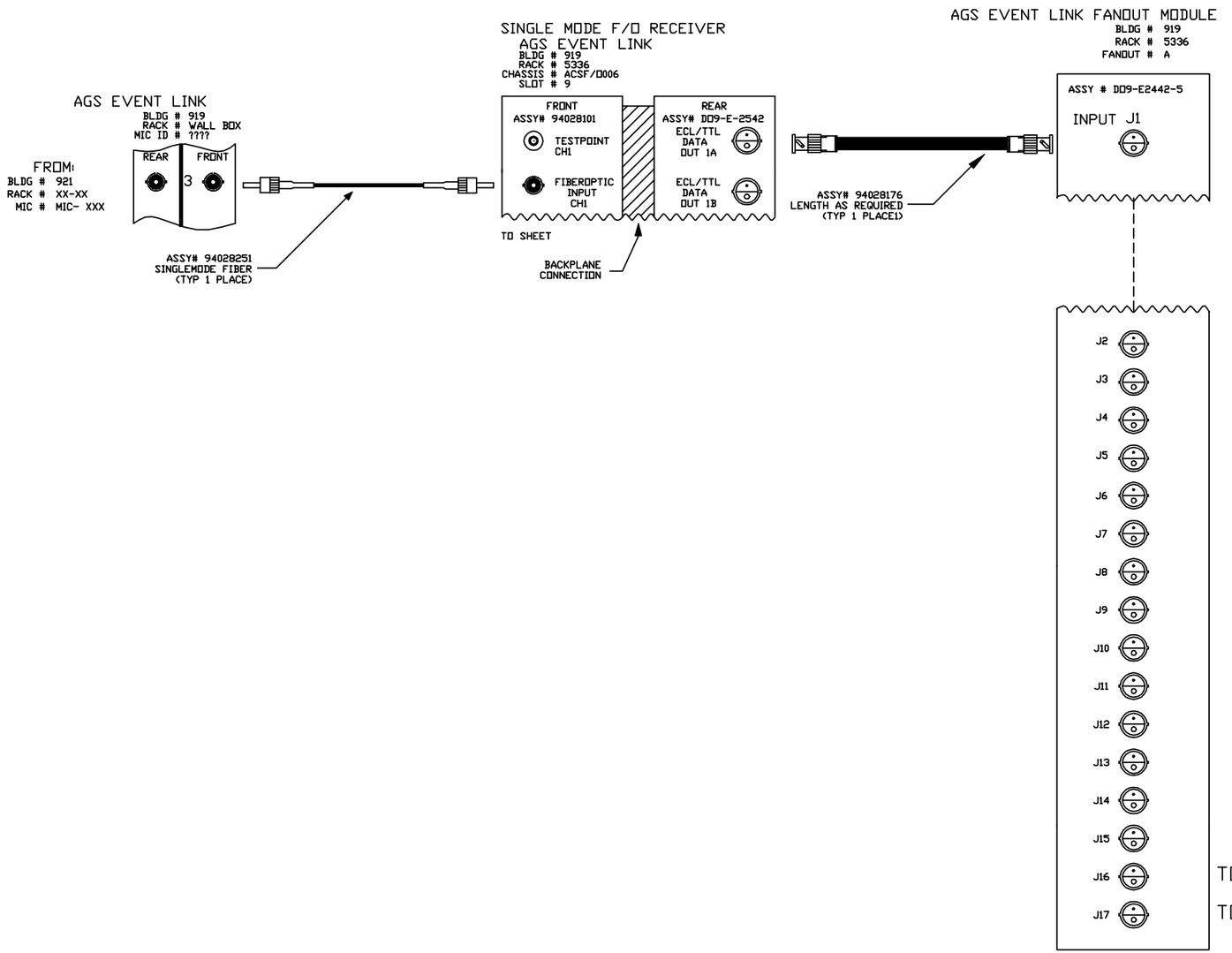

FILE "919EVENT.DGW"

-3	-2	-1	REF DESIGNATOR	ITEM NO.	DESCRIPTION	MAT'L. DWG NO.,SPL NO.
QTY REQD						

INTERPRET IN GENERAL ACCORDANCE WITH ASME Y14.24M-1989

UNLESS OTHERWISE SPECIFIED DIMENSIONS ARE IN INCHES

DECIMAL TOLERANCES
.X ±.030
.XX ±.015
.XXX ±.005
ANGULAR TOLERANCE
± .5°

NA FINISH

BREAK SHARP EDGES
MAX. XX MIN. XX

OUTSTANDING ECN

Q.A. CATEGORY A-3

		DATE
DRAWN BY	VENEGAS	12/30/97
CHECKED BY		
DESIGN APPROVAL		
ENGINEER APPROVAL		
SUPVR. APPROVAL		

NEXT ASSEMBLY

BROOKHAVEN NATIONAL LABORATORY
ASSOCIATED UNIVERSITIES, INC.
UPTON, N.Y. 11973

AGS CONTROLS WIRING DIAGRAM

919

AGS EVENT LINK

SIZE D

D09-E-RD2895

DRAWING NUMBER

REV. A

MATERIAL: ———— SCALE: NA WEIGHT: – SHEET 6

*AUTOCAD

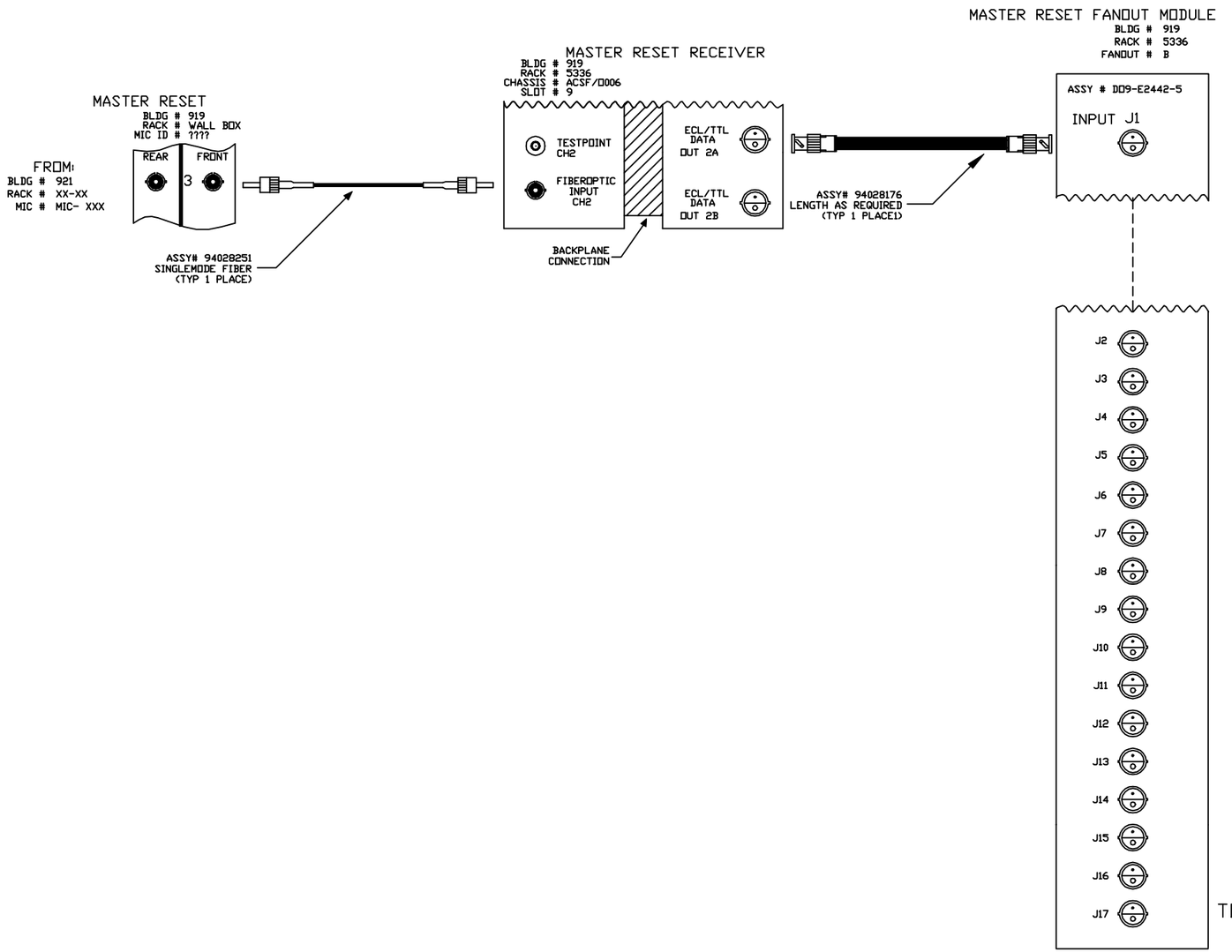

FILE "919RESET.DGW"

-3	-2	-1	REF DESIGNATOR	ITEM NO.	DESCRIPTION	MAT'L. DWG NO.,BRL NO.
QTY REQD						

INTERPRET IN GENERAL ACCORDANCE WITH ASME Y14.24M-1989

UNLESS OTHERWISE SPECIFIED DIMENSIONS ARE IN INCHES

DECIMAL TOLERANCES
.X ±.030
.XX ±.015
.XXX ±.005
ANGULAR TOLERANCE
± .5°

NA FINISH

BREAK SHARP EDGES
MAX. XX MIN. XX

OUTSTANDING ECN

Q.A. CATEGORY A-3		DATE
DRAWN BY	VENEGAS	12/30/97
CHECKED BY		
DESIGN APPROVAL		
ENGINEER APPROVAL		
SUPVR. APPROVAL		

NEXT ASSEMBLY

BROOKHAVEN NATIONAL LABORATORY
ASSOCIATED UNIVERSITIES, INC.
UPTON, N.Y. 11973

AGS CONTROLS WIRING DIAGRAM

919

MASTER RESET

SIZE D | D09-E-RD2897 | REV. A

DRAWING NUMBER

MATERIAL: ——— | SCALE: NA | WEIGHT: – | SHEET 7

1 *AUTOCAD