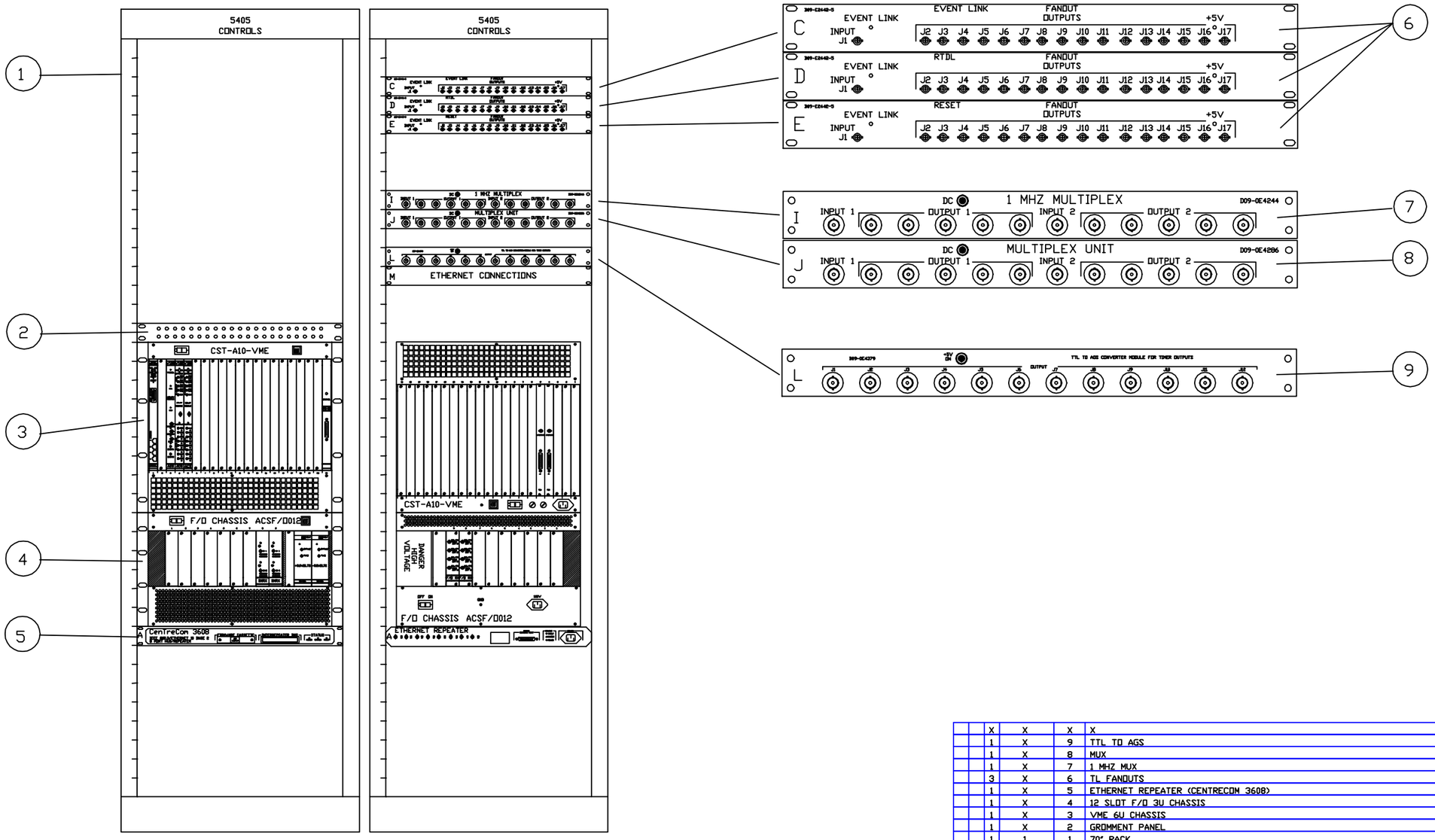

		X	X	X	X	X
		1	X	9	TTL TO AGS	X
		1	X	8	MUX	D09-OE4286
		1	X	7	1 MHZ MUX	D09-OE4244
		3	X	6	TL FANOUTS	X
		1	X	5	ETHERNET REPEATER (CENTRECOM 3608)	X
		1	X	4	12 SLOT F/O 3U CHASSIS	X
		1	X	3	VME 6U CHASSIS	X
		1	X	2	GROMMENT PANEL	X
		1	1	1	70" RACK	X
-3	-2	-1	REF DESIGNATOR	ITEM NO.	DESCRIPTION	MATL DWG NO.,BNL NO.
QTY REQD						

INTERPRET IN GENERAL ACCORDANCE WITH ASME Y14.24M-1989

UNLESS OTHERWISE SPECIFIED DIMENSIONS ARE IN INCHES

DECIMAL TOLERANCES
.X ±.030
.XX ±.015
.XXX ±.005
ANGULAR TOLERANCE
± .5°

NA FINISH

BREAK SHARP EDGES
MAX. XX MIN. XX

OUTSTANDING ECN

Q.A. CATEGORY A-3

DRAWN BY	Venegas	12/18/97
CHECKED BY		
DESIGN APPROVAL		
ENGINEER APPROVAL		
SUPVR. APPROVAL		

NEXT ASSEMBLY

BROOKHAVEN NATIONAL LABORATORY
ASSOCIATED UNIVERSITIES, INC.
UPTON, N.Y. 11973

RACK LAYOUT FOR A10
CONTROL SYSTEM

SIZE D
D09-E-RD2917
DRAWING NUMBER
REV. A

MATERIAL: ——— SCALE: FULL WEIGHT: – SHEET 1

FILE "A10STN.DWG"

*AUTOCAD

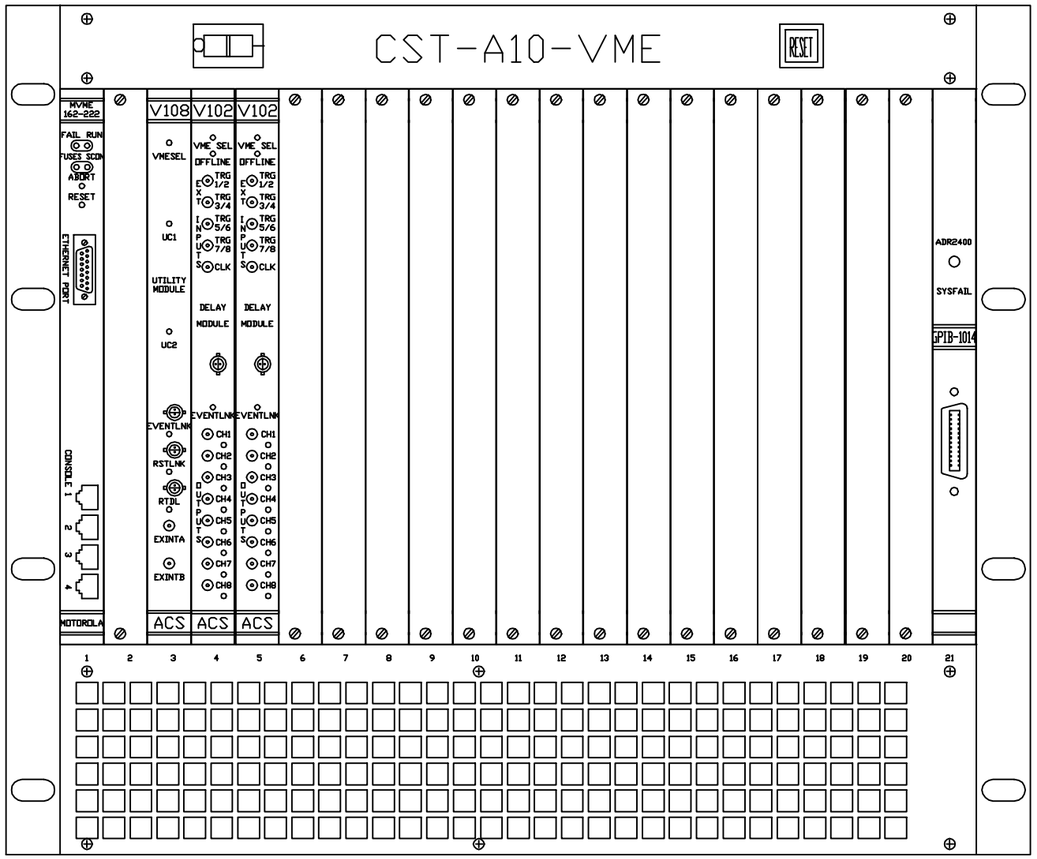

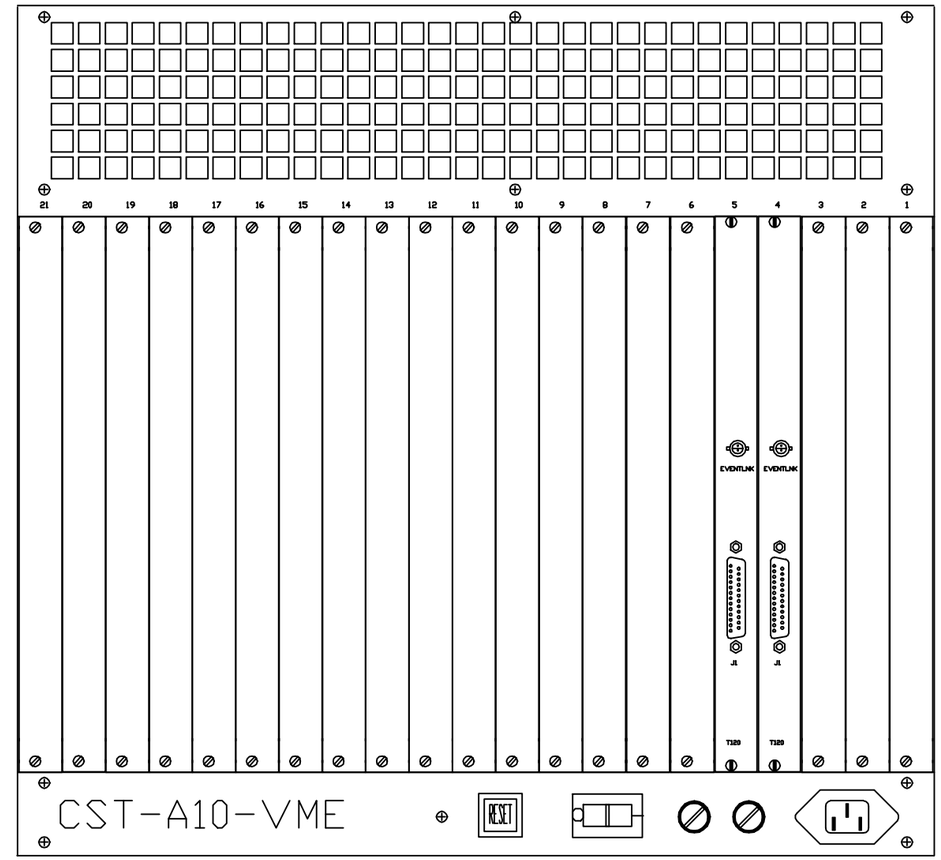

NOTE 1: FOR UNUSED SLOTS

-3	-2	-1	REF DESIGNATOR	ITEM NO.	DESCRIPTION	MAT'L DWG NO./BNL NO.
		X	X	X	X	X
		36	NOTE 1	8	6U FILLER PANELS	X
		2	SLOTS 4,5	7	T120 TRANSITION MODULE	X
		X	X	X	X	X
		X	X	X	X	X
		2	SLOT 4,5	4	V102 DECODER MODULE	94028070
		1	SLOT 3	3	V108 UTILITY MODLULE	94028094
		1	SLOT 1	2	FRONT END COMPUTER (162-222)	X
		1	N/A	1	6U VME CHASSIS	RHIC-93008000

QTY REQD

INTERPRET IN GENERAL ACCORDANCE WITH ASME Y14.24M-1989

UNLESS OTHERWISE SPECIFIED DIMENSIONS ARE IN INCHES
DECIMAL TOLERANCES
.X ±.030
.XX ±.015
.XXX ±.005
ANGULAR TOLERANCE ± .5°

OUTSTANDING ECN

NA FINISH

BREAK SHARP EDGES MAX. XX MIN. XX

Q.A. CATEGORY A-3

		DATE
DRAWN BY	VENEGAS	12/17/97
CHECKED BY		
DESIGN APPROVAL		
ENGINEER APPROVAL		
SUPVR. APPROVAL		

NEXT ASSEMBLY

BROOKHAVEN NATIONAL LABORATORY
ASSOCIATED UNIVERSITIES, INC.
UPTON, N.Y. 11973

VME CONTROL CHASSIS

A10

SIZE D

D09-E-RD2912

DRAWING NUMBER

REV.

MATERIAL: ——— SCALE: WEIGHT: SHEET 2

FILE "A10CST.DWG"

*AUTOCAD

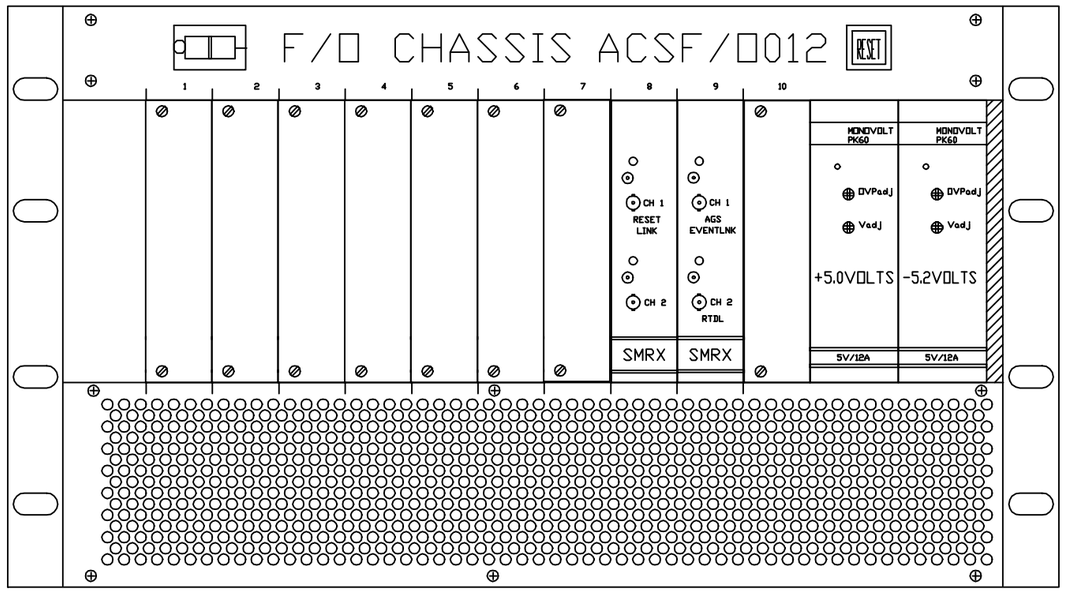

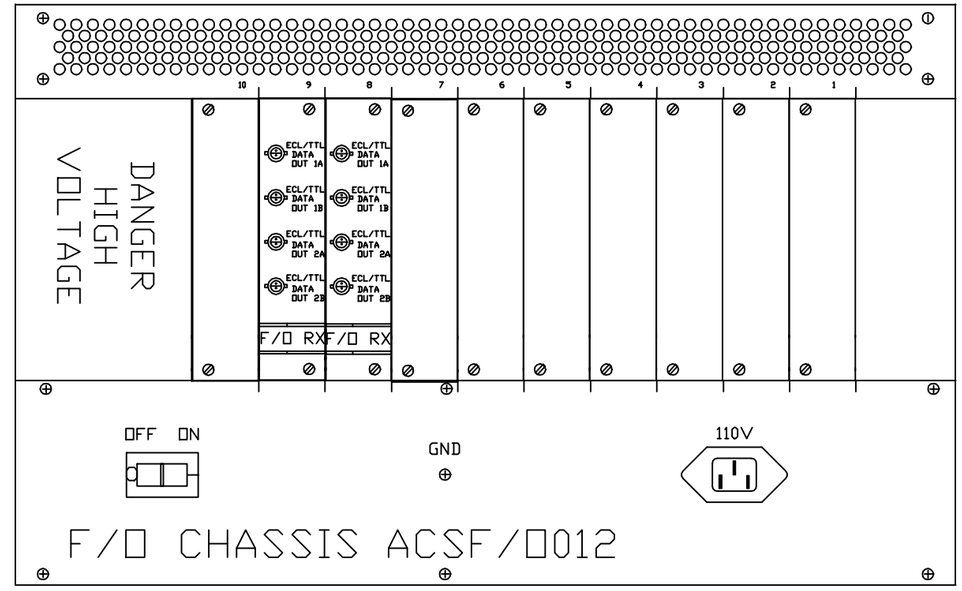

NOTE 1: FILLER PANELS FOR UNUSED SLOTS

-3	-2	-1	REF DESIGNATOR	ITEM NO.	DESCRIPTION	MAT'L DWG NO.,BNL NO.
		X	X	X	X	X
		X	X	X	X	X
		16	NOTE 1	6	3UX 6HP BLANK PANEL	ESFE-3032
		1	SLOT 12	5	MONOVOLT P.S. -5.2V	X
		1	SLOT 11	4	MONOVOLT P.S. +5V	X
		2	SLOT 8,9 R	3	3U F/O RX TRANSITION MODULE (TTL)	D09-E2542
		2	SLOT 8,9	2	F/O SMRX	94028101
		1	X	1	12 SLOT 3U F/O CHASSIS	94028261

QTY REQD

INTERPRET IN GENERAL ACCORDANCE WITH ASME Y14.24M-1989

UNLESS OTHERWISE SPECIFIED DIMENSIONS ARE IN INCHES

DECIMAL TOLERANCES
.030 .X ±
.015 .XX ±
.005 .XXX ±
ANGULAR TOLERANCE
.5° ±

NA FINISH

BREAK SHARP EDGES MAX. XX MIN. XX

OUTSTANDING ECN

Q.A. CATEGORY A-3

DRAWN BY Venegas 12/19/97

CHECKED BY

DESIGN APPROVAL

ENGINEER APPROVAL

SUPVR. APPROVAL

DATE

NEXT ASSEMBLY

BROOKHAVEN NATIONAL LABORATORY
ASSOCIATED UNIVERSITIES, INC.
UPTON, N.Y. 11973

A10 F/O CHASSIS

SIZE D09-E-RD2914 REV. A

DRAWING NUMBER

MATERIAL: FULL SCALE: – WEIGHT: 3 SHEET

FILE "A10F_O.DWG"

1 *AUTOCAD

REV.	ZONE	ECN NO.	DATE	BY	CKR	APP.

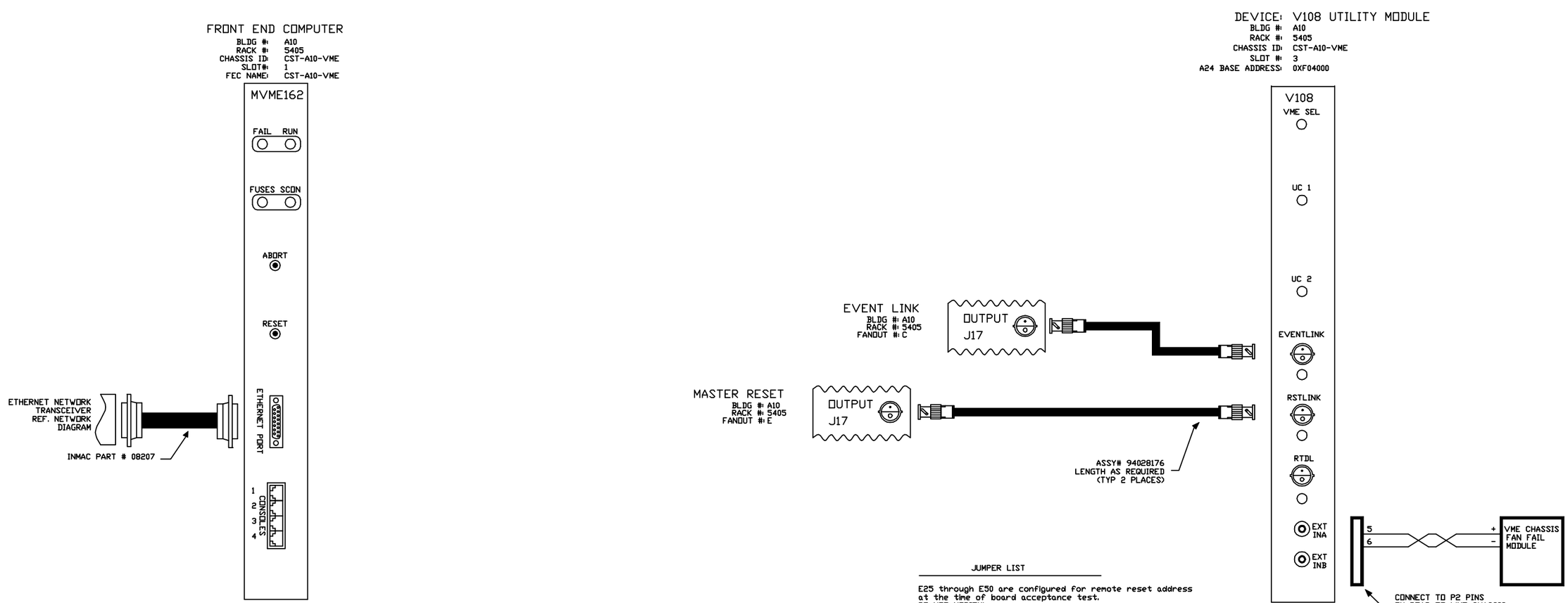

JUMPER LIST

E25 through E50 are configured for remote reset address at the time of board acceptance test.
DO NOT MODIFY!

Remote reset pulls VME SYS Reset.
E58-E60, E59-E61

A24 BASE ADDRESS= 4000h
E1-E13, E2-E14, E3-E15, E4-E16, E5-E17, E6-E18
E7-E19, E8-E20, E9-E21, E10-E22, E11-E24, E57-E23
SW1=OPEN
SW2=CLOSED
SW3=OPEN
SW4=OPEN

A10_V108.DWG

-3	-2	-1	REF DESIGNATOR	ITEM NO.	DESCRIPTION	MAT'L DWG NO.,DWG NO.
QTY REQD						

INTERPRET IN GENERAL ACCORDANCE WITH ASME Y14.24M-1989

UNLESS OTHERWISE SPECIFIED DIMENSIONS ARE IN INCHES

DECIMAL TOLERANCES
.X ±.030
.XX ±.015
.XXX ±.005
ANGULAR TOLERANCE
± .5°

NA FINISH

BREAK SHARP EDGES
MAX. XX MIN. XX

OUTSTANDING ECN

Q.A. CATEGORY A-3		DATE
DRAWN BY	VENEGAS	12/22/97
CHECKED BY		
DESIGN APPROVAL		
ENGINEER APPROVAL		
SUPVR. APPROVAL		

NEXT ASSEMBLY

BROOKHAVEN NATIONAL LABORATORY
ASSOCIATED UNIVERSITIES, INC.
UPTON, N.Y. 11973

AGS CONTROLS WIRING DIAGRAM
VME CHASSIS CST-A10-VME
FT END COMP/V108 UTIL MODULE

SIZE D
D09-E-RD2911
DRAWING NUMBER
REV. A

MATERIAL: ——— SCALE: NA WEIGHT: — SHEET 4

*AUTOCAD

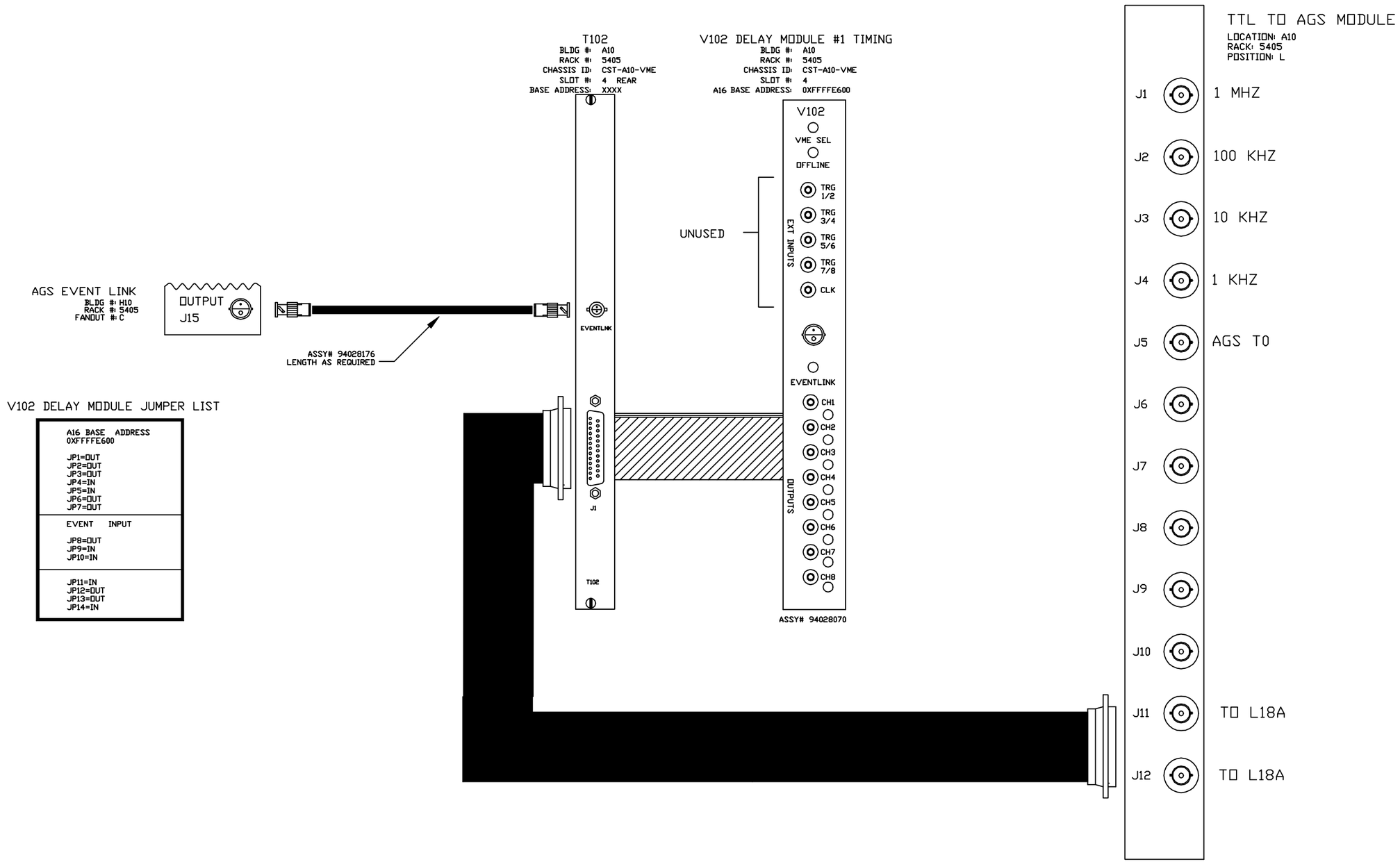

V102 DELAY MODULE JUMPER LIST

A16 BASE ADDRESS 0XFFFFE600 JP1=OUT JP2=OUT JP3=OUT JP4=IN JP5=IN JP6=OUT JP7=OUT
EVENT INPUT JP8=OUT JP9=IN JP10=IN
JP11=IN JP12=OUT JP13=OUT JP14=IN

FILE "A10_102.DWG"

REV.	ZONE	ECN NO.	DATE	BY	CKR	APP.

-3	-2	-1	REF DESIGNATOR	ITEM NO.	DESCRIPTION	MAT'L DWG NO./BNL NO.
QTY REQD						

INTERPRET IN GENERAL ACCORDANCE WITH ASME Y14.24M-1989

UNLESS OTHERWISE SPECIFIED DIMENSIONS ARE IN INCHES

DECIMAL TOLERANCES
.X ±.030
.XX ±.015
.XXX ±.005
ANGULAR TOLERANCE
± .5°

NA FINISH

BREAK SHARP EDGES
MAX. XX MIN. XX

OUTSTANDING ECN

Q.A. CATEGORY A-3

		DATE
DRAWN BY	VENEGAS	12/11/97
CHECKED BY		
DESIGN APPROVAL		
ENGINEER APPROVAL		
SUPVR. APPROVAL		

NEXT ASSEMBLY

BROOKHAVEN NATIONAL LABORATORY
ASSOCIATED UNIVERSITIES, INC.
UPTON, N.Y. 11973

AGS CONTROLS WIRING DIAGRAM
CST-A10-VME
V102 DELAY MODULE #1 TIMING

SIZE D
D09-E-RD2908
DRAWING NUMBER
REV. A

MATERIAL: ——— SCALE: NA WEIGHT: — SHEET 5

*AUTOCAD

REV.	ZONE	ECN NO.	DATE	BY	CKR	APP.

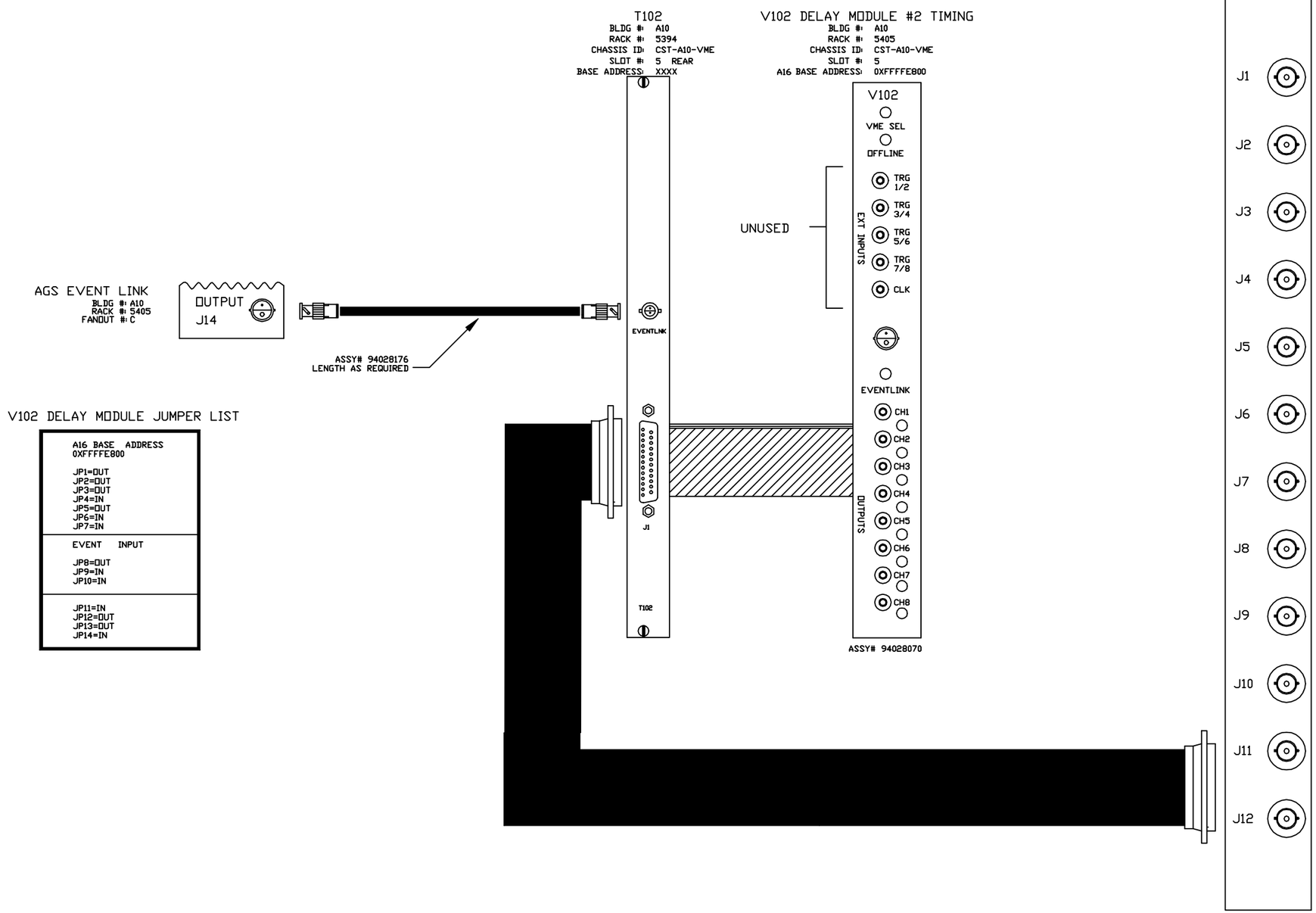

TTL TO AGS MODULE

LOCATION: A10
RACK: 5405
POSITION: K

TTL TO AGS CONVERTER IS BEING USED IN ANOTHER LOCATION

V102 DELAY MODULE JUMPER LIST

A16 BASE ADDRESS 0XFFFFE800 JP1=OUT JP2=OUT JP3=OUT JP4=IN JP5=OUT JP6=IN JP7=IN
EVENT INPUT JP8=OUT JP9=IN JP10=IN
JP11=IN JP12=OUT JP13=OUT JP14=IN

FILE "A10_102_2.DWG"

-3	-2	-1	REF DESIGNATOR	ITEM NO.	DESCRIPTION	MAT'L DWG NO./BNL NO.
QTY REQD						

INTERPRET IN GENERAL ACCORDANCE WITH ASME Y14.24M-1989	Q.A. CATEGORY A-3	DATE	BROOKHAVEN NATIONAL LABORATORY ASSOCIATED UNIVERSITIES, INC. UPTON, N.Y. 11973
	DRAWN BY VENEGAS	12/22/97	
UNLESS OTHERWISE SPECIFIED DIMENSIONS ARE IN INCHES	CHECKED BY		AGS CONTROLS WIRING DIAGRAM
DECIMAL TOLERANCES .X ±.030 .XX ±.015 .XXX ±.005 ANGULAR TOLERANCE ± .5°	DESIGN APPROVAL		CST-A10-VME
	ENGINEER APPROVAL		V102 DELAY MODULE #2 TIMING
	SUPVR. APPROVAL		SIZE D — D09-E-RD2909 — REV. A
NA FINISH	BREAK SHARP EDGES MAX. XX MIN. XX	NEXT ASSEMBLY	DRAWING NUMBER
OUTSTANDING ECN			MATERIAL: ——— SCALE: NA WEIGHT: – SHEET 6

*AUTOCAD

REV.	ZONE	ECN NO.	DATE	BY	CKR	APP.

GPIB 1014 FOR 488 DEVICE CONTROLLERS

BLDG #: A10
RACK #: 5405
CHASSIS ID: CST-A10-VME
SLOT #: 21
A24 BASE ADDRESS: 0XF0002000

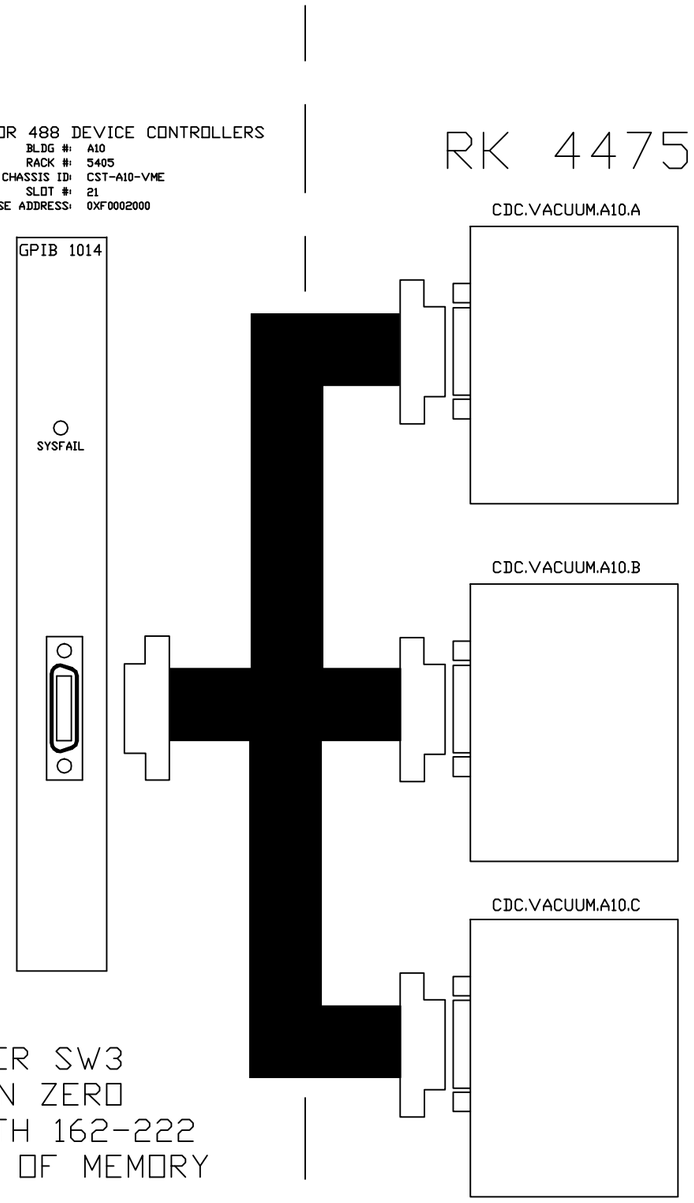

NOTE: JUMPER SW3
HAS TO BE IN ZERO
POSITION WITH 162-222
WITH 16 MEG OF MEMORY

FILE "A10_488.DWG"

-3	-2	-1	REF DESIGNATOR	ITEM NO.	DESCRIPTION	MAT'L DWG NO.,BNL NO.
QTY REQD						

INTERPRET IN GENERAL ACCORDANCE WITH ASME Y14.24M-1989

UNLESS OTHERWISE SPECIFIED DIMENSIONS ARE IN INCHES

DECIMAL TOLERANCES
.X ±.030
.XX ±.015
.XXX ±.005
ANGULAR TOLERANCE
± .5°

NA FINISH

BREAK SHARP EDGES
MAX. XX MIN. XX

OUTSTANDING ECN

Q.A. CATEGORY A-3		DATE
DRAWN BY	VENEGAS	12/22/97
CHECKED BY		
DESIGN APPROVAL		
ENGINEER APPROVAL		
SUPVR. APPROVAL		

NEXT ASSEMBLY

BROOKHAVEN NATIONAL LABORATORY
ASSOCIATED UNIVERSITIES, INC.
UPTON, N.Y. 11973

AGS CONTROLS WIRING DIAGRAM

VME CHASSIS CST-A10-VME

GPIB INTER FOR DEVICE CNTRLS

SIZE | D09-E-RD2910 | REV.

DRAWING NUMBER

MATERIAL: ——— SCALE: NA WEIGHT: – SHEET 7

*AUTOCAD

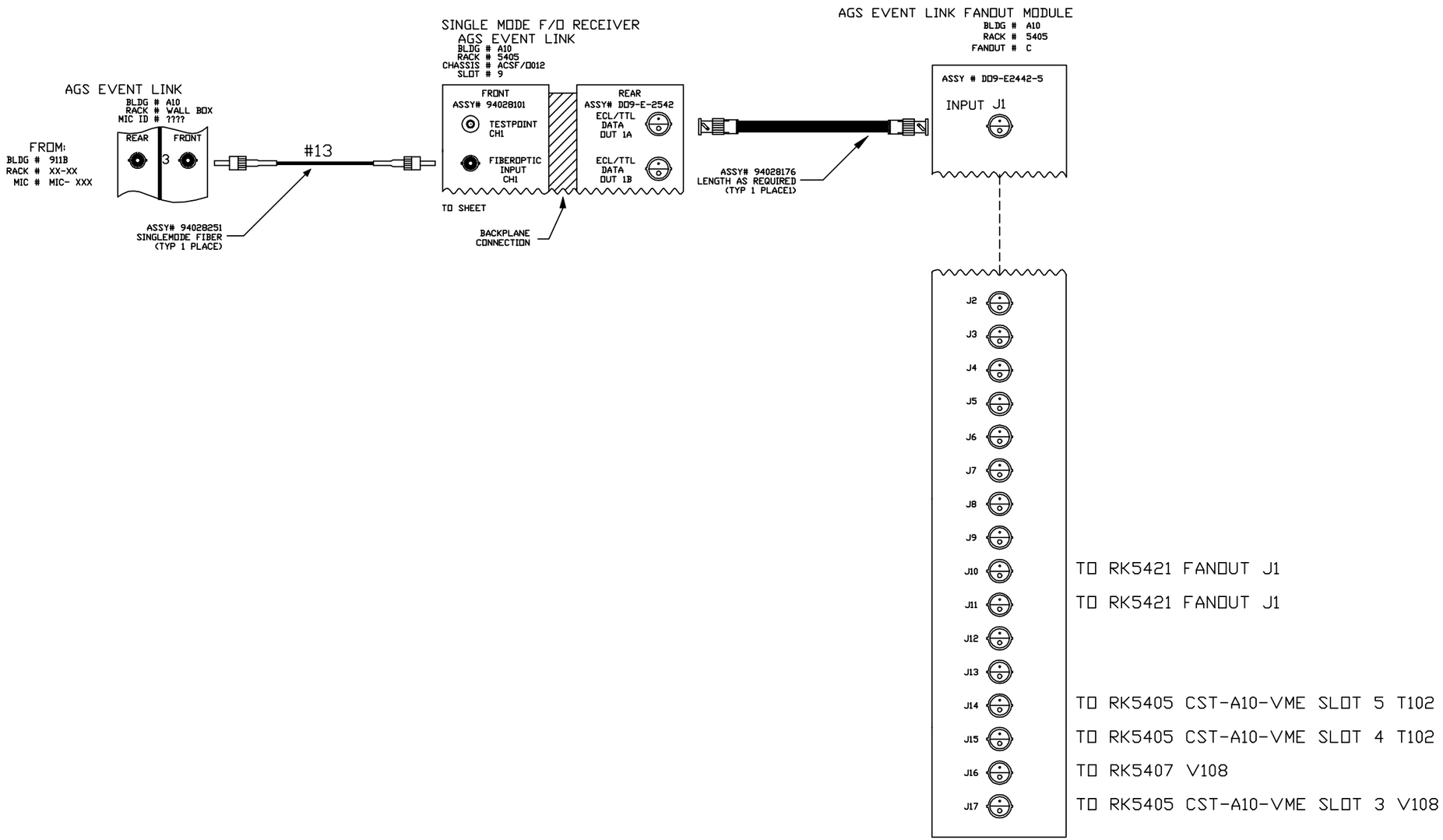

FILE "A10EVENT.DGW"

REV.	ZONE	ECN NO.	DATE	BY	CKR	APP.

-3	-2	-1	REF DESIGNATOR	ITEM NO.	DESCRIPTION	MAT'L. DWG NO.,BRL NO.
QTY REQD						

INTERPRET IN GENERAL ACCORDANCE WITH ASME Y14.24M-1989

UNLESS OTHERWISE SPECIFIED DIMENSIONS ARE IN INCHES

DECIMAL TOLERANCES
.X ±.030
.XX ±.015
.XXX ±.005
ANGULAR TOLERANCE
± .5°

NA FINISH

BREAK SHARP EDGES
MAX. XX MIN. XX

OUTSTANDING ECN

Q.A. CATEGORY A-3

		DATE
DRAWN BY	VENEGAS	12/19/97
CHECKED BY		
DESIGN APPROVAL		
ENGINEER APPROVAL		
SUPVR. APPROVAL		

NEXT ASSEMBLY

BROOKHAVEN NATIONAL LABORATORY
ASSOCIATED UNIVERSITIES, INC.
UPTON, N.Y. 11973

AGS CONTROLS WIRING DIAGRAM

A10

AGS EVENT LINK

SIZE D

D09-E-RD2913

DRAWING NUMBER

REV. A

MATERIAL: ——— SCALE: NA WEIGHT: – SHEET 8

*AUTOCAD

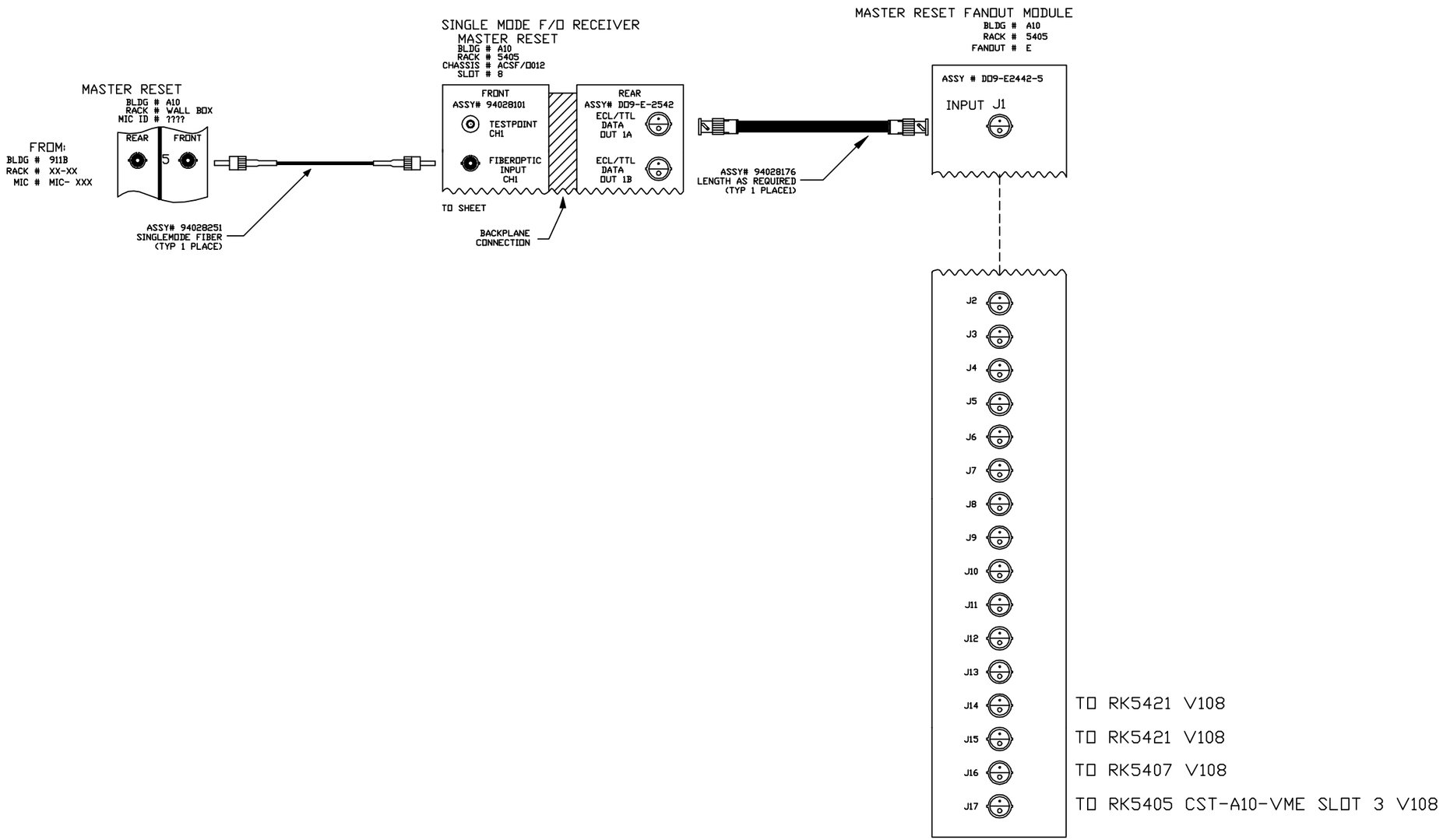

FILE "A10RESET.DGW"

REV.	ZONE	ECN NO.	DATE	BY	CKR	APP.

-3	-2	-1	REF DESIGNATOR	ITEM NO.	DESCRIPTION	MAT'L DWG NO.,BRL NO.
QTY REQD						

INTERPRET IN GENERAL ACCORDANCE WITH ASME Y14.24M-1989

UNLESS OTHERWISE SPECIFIED DIMENSIONS ARE IN INCHES

DECIMAL TOLERANCES
.X ±.030
.XX ±.015
.XXX ±.005
ANGULAR TOLERANCE
± .5°

NA FINISH

BREAK SHARP EDGES
MAX. XX MIN. XX

OUTSTANDING ECN

Q.A. CATEGORY A-3

		DATE
DRAWN BY	VENEGAS	12/19/97
CHECKED BY		
DESIGN APPROVAL		
ENGINEER APPROVAL		
SUPVR. APPROVAL		

NEXT ASSEMBLY

BROOKHAVEN NATIONAL LABORATORY
ASSOCIATED UNIVERSITIES, INC.
UPTON, N.Y. 11973

AGS CONTROLS WIRING DIAGRAM

A10

MASTER RESET

SIZE D

D09-E-RD2915

DRAWING NUMBER

REV. A

MATERIAL: ——— SCALE: NA WEIGHT: – SHEET 9

*AUTOCAD

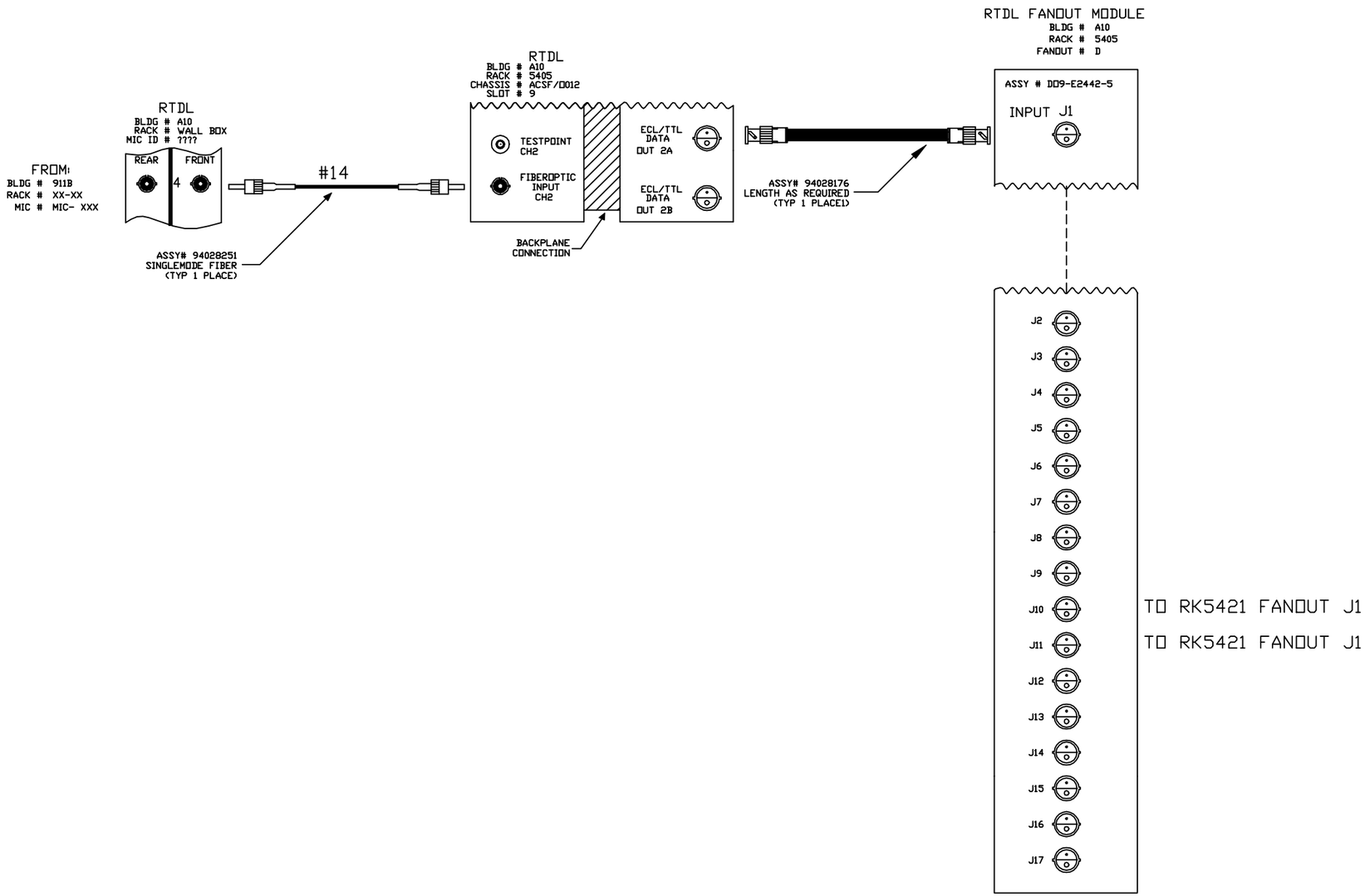

FILE "A10RTDL.DGW"

-3	-2	-1	REF DESIGNATOR	ITEM NO.	DESCRIPTION	MAT'L. DWG NO.,BRL NO.
QTY REQD						

INTERPRET IN GENERAL ACCORDANCE WITH ASME Y14.24M-1989

UNLESS OTHERWISE SPECIFIED DIMENSIONS ARE IN INCHES

DECIMAL TOLERANCES
.X ±.030
.XX ±.015
.XXX ±.005
ANGULAR TOLERANCE
± .5°

NA FINISH

BREAK SHARP EDGES
MAX. XX MIN. XX

OUTSTANDING ECN

Q.A. CATEGORY A-3		DATE
DRAWN BY	VENEGAS	12/19/97
CHECKED BY		
DESIGN APPROVAL		
ENGINEER APPROVAL		
SUPVR. APPROVAL		

NEXT ASSEMBLY

BROOKHAVEN NATIONAL LABORATORY
ASSOCIATED UNIVERSITIES, INC.
UPTON, N.Y. 11973

AGS CONTROLS WIRING DIAGRAM

A10

RTDL

SIZE D | DRAWING NUMBER D09-E-RD2916 | REV. A

MATERIAL: ——— | SCALE: NA | WEIGHT: – | SHEET 10

*AUTOCAD

DIGITAL OUTPUT MODULE (LOW CURRENT)
VMIVME 2170A

BLDG #: 1005E
RACK #: 5B-3
CHASSIS ID: CFE-5E-BLM1
SLOT #: 4
A16 BASE ADDRESS: 0xE100

C-A Controls 5/9/01 2:06 PM 8717_05.dwg

REV.	ZONE	ECN NO.	DATE	BY	CKR	APP.

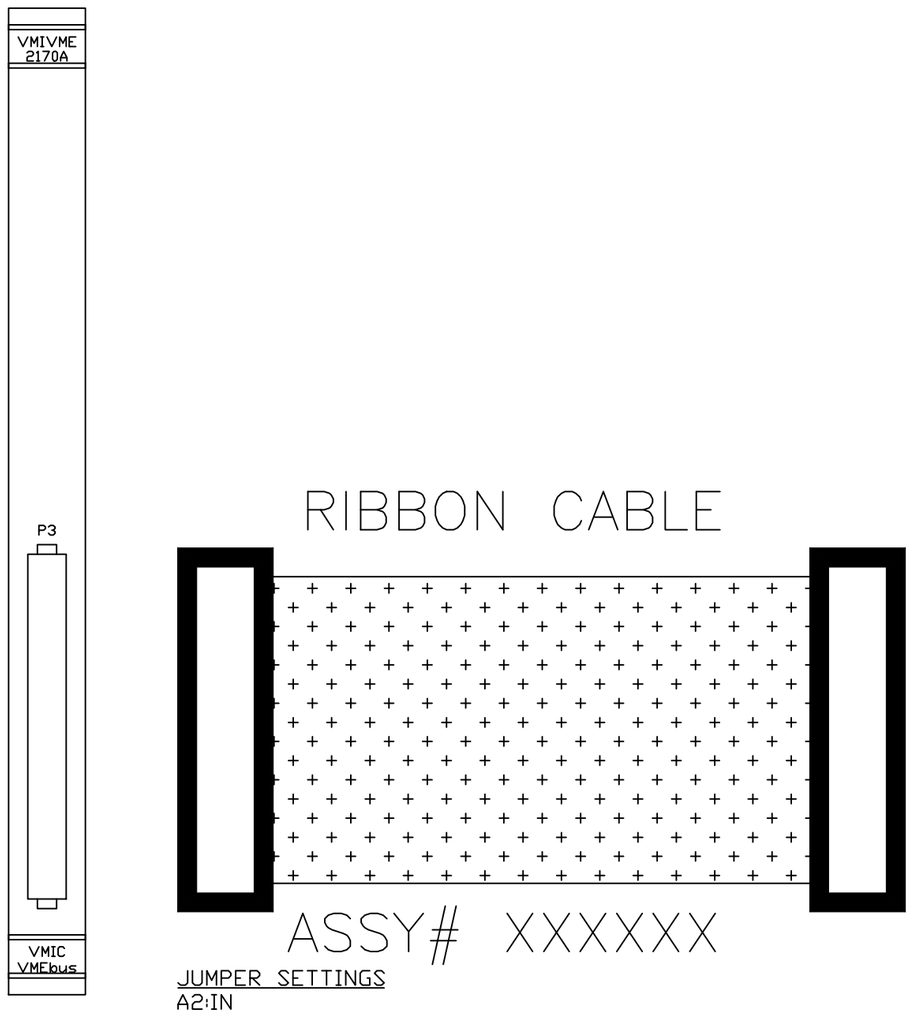

JUMPER SETTINGS
A2:IN
A3:IN
A4:IN
A5:IN
A6:IN
A7:IN
A8:OUT
A9:IN
A10:IN
A11:IN
A12:IN
A13:OUT
A14:OUT
A15:OUT

NOTE 1: JUMPER JA1 IS REMOVED

-3	-2	-1	REF DESIGNATOR	ITEM NO.	DESCRIPTION	MAT'L DWG NO./BHL NO.
QTY REQD						

INTERPRET IN GENERAL ACCORDANCE WITH ASME Y14.24M-1989
UNLESS OTHERWISE SPECIFIED DIMENSIONS ARE IN INCHES
DECIMAL TOLERANCES .X ±.030 .XX ±.015 .XXX ±.005
ANGULAR TOLERANCE ± .5°
OUTSTANDING ECN
NA FINISH
BREAK SHARP EDGES MAX. XX MIN. XX

Q.A. CATEGORY A-3		DATE
DRAWN BY	JASON ORTIZ	05/08/01
CHECKED BY		
DESIGN APPROVAL		
ENGINEER APPROVAL	R. MICHNOFF	9/2/98
SUPVR. APPROVAL		
NEXT ASSEMBLY		

BROOKHAVEN NATIONAL LABORATORY
UPTON, N.Y. 11973
AGS VME STATION DRAWINGS
A10,
DIGITAL OUTPUTS

SIZE D | DRAWING NUMBER | REV. A
MATERIAL: ——— SCALE: NA WEIGHT: – SHEET

*AUTOCAD

REV.	ZONE	ECN NO.	DATE	BY	CKR	APP.

C-A Controls 5/9/01 2:50 PM a10_1160a.dwg

DIGITAL INPUT MODULE
VMIVME 1160A

BLDG #:	A10
RACK #:	5405
CHASSIS ID:	CST.A10.VME
SLOT #:	7
A16 BASE ADDRESS:	0XFFFFE000

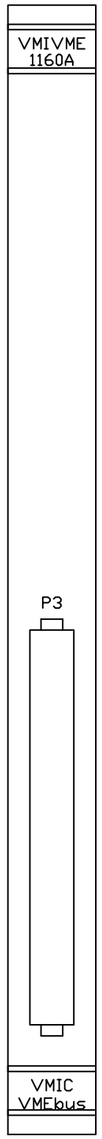

RIBBON CABLE

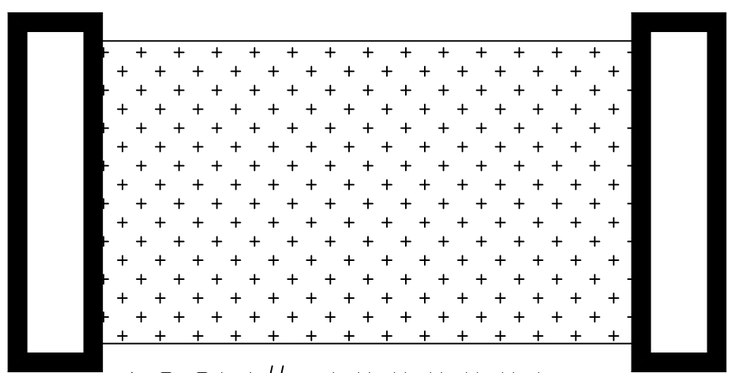

ASSY# XXXXXX

1160A JUMPERS INSTALLED
J1,3,5,7,9,11,13,15,17,19,21,23,25,27,29,31,33
,35,37,39,41,43,45,47,49,51,53,55,57,59,61,63

J65

1160A
BASE ADDRESS DIP SWITCHES

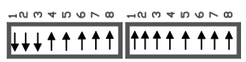

PUSH SWITCH IN DIRECTION SHOWN

-3	-2	-1	REF DESIGNATOR	ITEM NO.	DESCRIPTION	MAT'L DWG NO.,SPL NO.
QTY REQD						

INTERPRET IN GENERAL ACCORDANCE WITH ASME Y14.24M-1989

UNLESS OTHERWISE SPECIFIED DIMENSIONS ARE IN INCHES

DECIMAL TOLERANCES
.X ±.030
.XX ±.015
.XXX ±.005
ANGULAR TOLERANCE ± .5°

OUTSTANDING ECN

NA FINISH

BREAK SHARP EDGES
MAX. XX MIN. XX

Q.A. CATEGORY A-3		DATE
DRAWN BY	Jason Ortiz	05/09/01
CHECKED BY		
DESIGN APPROVAL		
ENGINEER APPROVAL		
SUPVR. APPROVAL		

NEXT ASSEMBLY

BROOKHAVEN NATIONAL LABORATORY
UPTON, N.Y. 11973

VMIVME 1160A

A10

SIZE D | DRAWING NUMBER | REV. A

MATERIAL: ——— | SCALE: FULL | WEIGHT: – | SHEET

*AUTOCAD