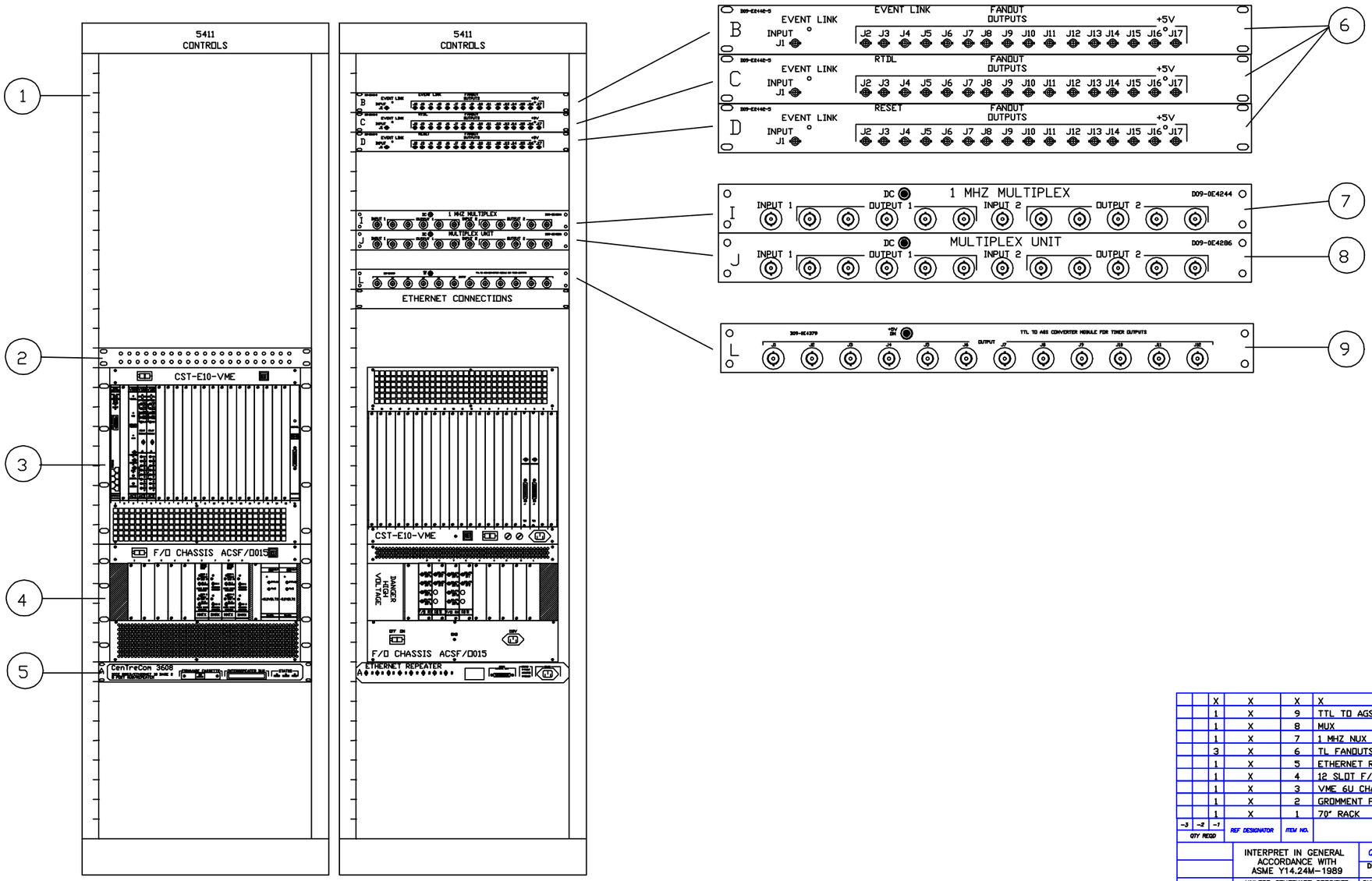

-3	-2	-1	REF DESIGNATOR	ITEM NO.	DESCRIPTION	MAT'L DWG NO./BNL NO.
		X	X	X	X	X
		1	X	9	TTL TO AGS	X
		1	X	8	MUX	X
		1	X	7	1 MHZ NUX	X
		3	X	6	TL FANOUTS	X
		1	X	5	ETHERNET REPEATER (CENTRECOM 3608)	X
		1	X	4	12 SLOT F/O 3U CHASSIS	X
		1	X	3	VME 6U CHASSIS	X
		1	X	2	GROMMENT PANEL	X
		1	X	1	70" RACK	X

QTY REQD

FILE "E10STN.DWG"

INTERPRET IN GENERAL ACCORDANCE WITH ASME Y14.24M-1989

UNLESS OTHERWISE SPECIFIED DIMENSIONS ARE IN INCHES

DECIMAL TOLERANCES
.X ±.030
.XX ±.015
.XXX ±.005
ANGULAR TOLERANCE
± .5°

FINISH: NA

BREAK SHARP EDGES
MAX. XX MIN. XX

OUTSTANDING ECN

Q.A. CATEGORY A-3

DATE 12/18/97

DRAWN BY Venegas

CHECKED BY

DESIGN APPROVAL

ENGINEER APPROVAL

SUPVR. APPROVAL

NEXT ASSEMBLY

BROOKHAVEN NATIONAL LABORATORY
ASSOCIATED UNIVERSITIES, INC.
UPTON, N.Y. 11973

RACK LAYOUT FOR E10
CONTROL SYSTEM

SIZE D

D09-E-RD2874

REV. A

DRAWING NUMBER

MATERIAL: ———

SCALE: FULL

WEIGHT: –

SHEET 1

*AUTOCAD

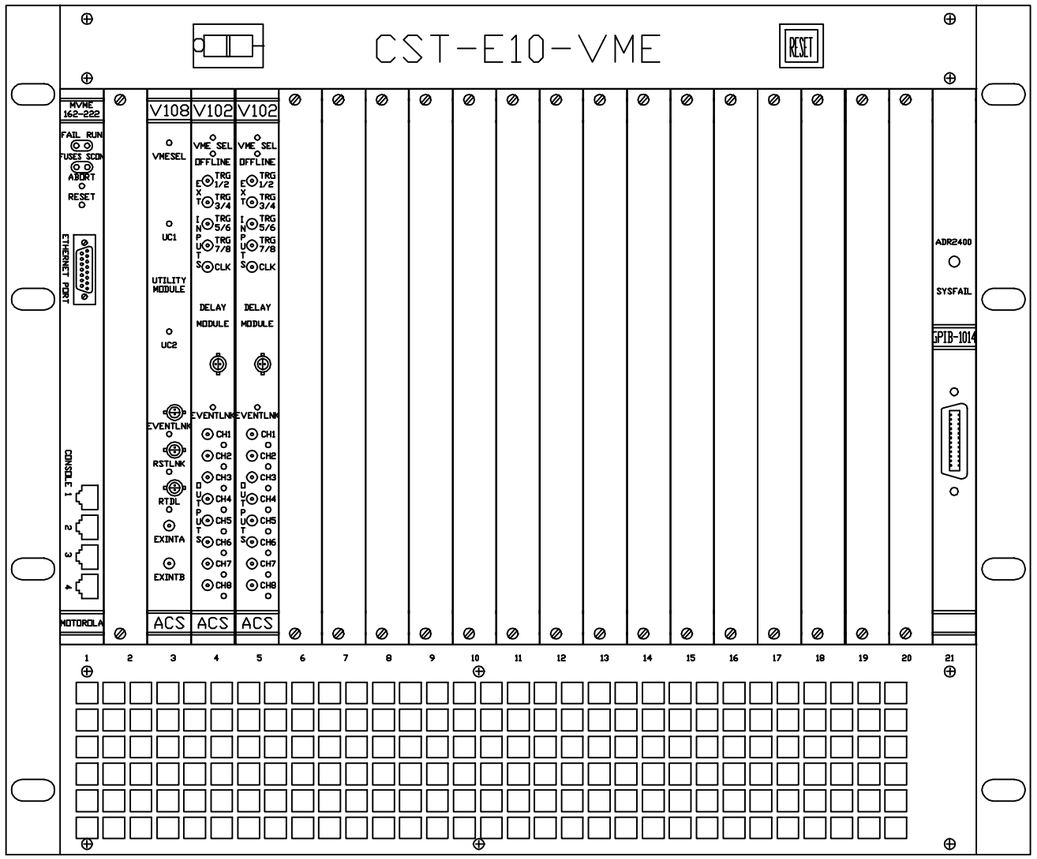

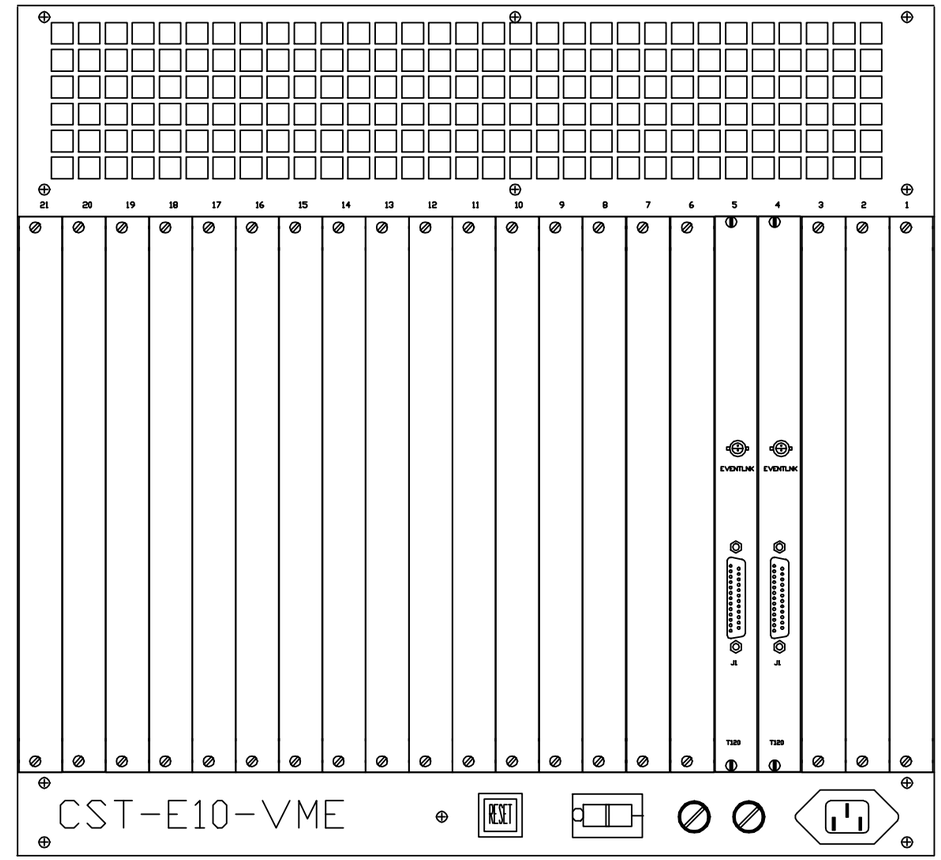

NOTE 1: FOR UNUSED SLOTS

QTY REQD -3	QTY REQD -2	QTY REQD -1	REF DESIGNATOR	ITEM NO.	DESCRIPTION	MAT'L DWG NO./BNL NO.
		X	X	X	X	X
		36	NOTE 1	8	6U FILLER PANELS	X
		2	SLOTS 4,5	7	T120 TRANSITION MODULE	X
		X	X	X	X	X
		X	X	X	X	X
		2	SLOT 4,5	4	V102 DECODER MODULE	94028070
		1	SLOT 3	3	V108 UTILITY MODLULE	94028094
		1	SLOT 1	2	FRONT END COMPUTER (162-222)	X
		1	N/A	1	6U VME CHASSIS	RHIC-93008000

INTERPRET IN GENERAL ACCORDANCE WITH ASME Y14.24M-1989	Q.A. CATEGORY A-3	DATE	BROOKHAVEN NATIONAL LABORATORY ASSOCIATED UNIVERSITIES, INC. UPTON, N.Y. 11973
	DRAWN BY VENEGAS	12/18/97	
UNLESS OTHERWISE SPECIFIED DIMENSIONS ARE IN INCHES	CHECKED BY		VME CONTROL CHASSIS
DECIMAL TOLERANCES .X ±.030 .XX ±.015 .XXX ±.005 ANGULAR TOLERANCE ± .5°	DESIGN APPROVAL		E10
	ENGINEER APPROVAL		
	SUPVR. APPROVAL		SIZE D — DRAWING NUMBER D09-E-RD2866 — REV.
OUTSTANDING ECN	NA FINISH	BREAK SHARP EDGES MAX. XX MIN. XX	NEXT ASSEMBLY — MATERIAL: — SCALE: — WEIGHT: — SHEET 2

FILE "E10CST.DWG"

*AUTOCAD

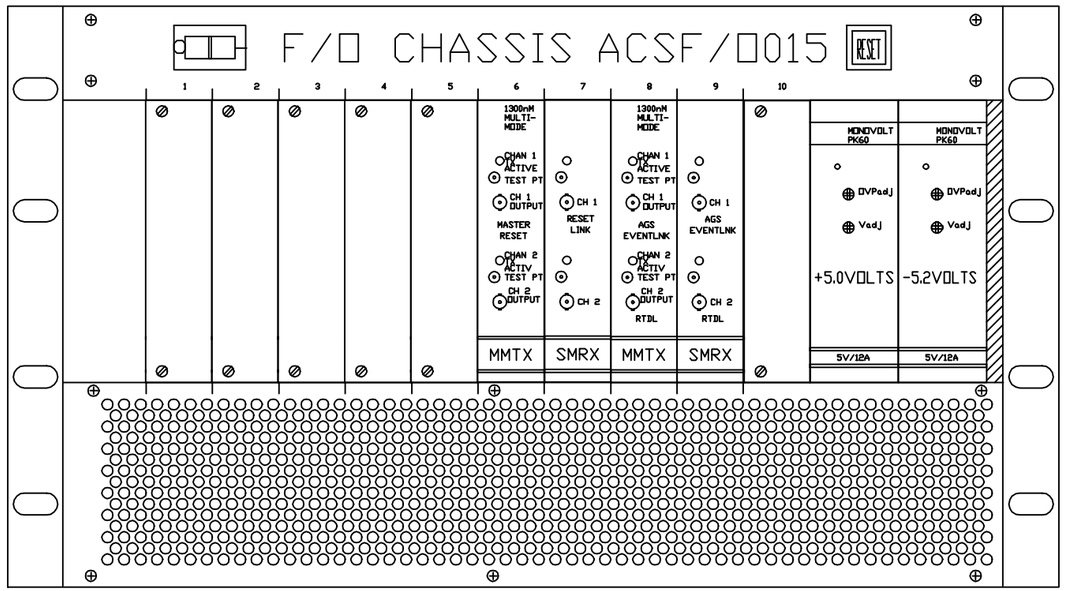

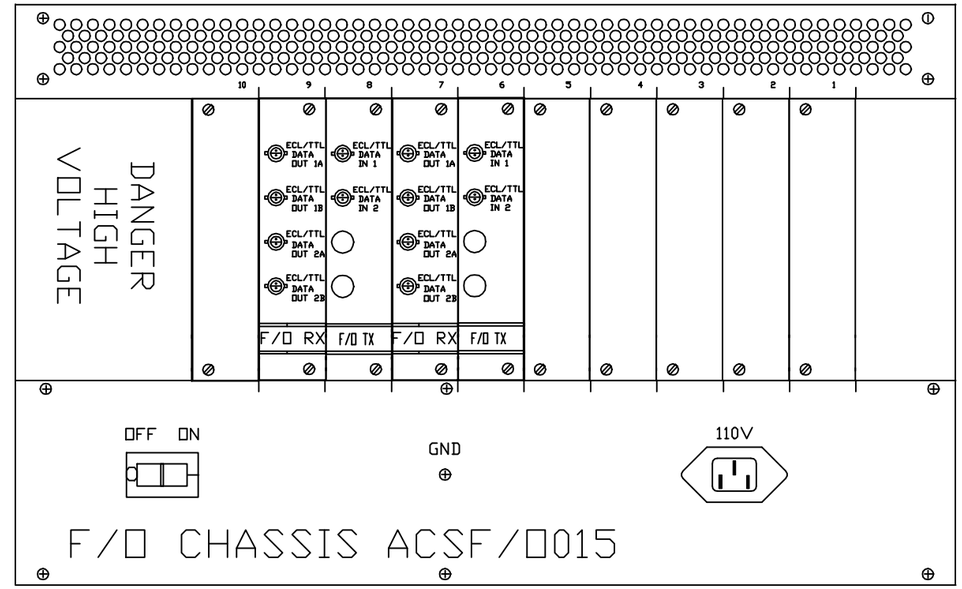

NOTE 1: FILLER PANELS FOR UNUSED SLOTS

-3	-2	-1	REF DESIGNATOR	ITEM NO.	DESCRIPTION	MAT'L DWG NO.,BNL NO.
		12	NOTE 1	10	3U X 6HP BLANK PANEL	ESFE-3032
		X				
		X				
		2	SLOT 6,8 R	7	3U F/O TX TRANSITION MODULE (TTL)	
		2	SLOT 6,8	6	F/O MMTX	
		1	SLOT 12	5	MONOVOLT P.S. -5.2V	
		1	SLOT 11	4	MONOVOLT P.S. +5V	
		2	SLOT 7,9 R	3	3U F/O TRANSITION MODULE (TTL)	D09-E2542
		2	SLOT 7,9	2	F/O SMRX	94028101
		1	X	1	12 SLOT 3U F/O CHASSIS	94028261

QTY REQD

INTERPRET IN GENERAL ACCORDANCE WITH ASME Y14.24M-1989

UNLESS OTHERWISE SPECIFIED DIMENSIONS ARE IN INCHES

DECIMAL TOLERANCES: .030 .X ±; .015 .XX ±; .005 .XXX ±

ANGULAR TOLERANCE: .5° ±

OUTSTANDING ECN: NA

FINISH: BREAK SHARP EDGES

MAX. XX MIN. XX

Q.A. CATEGORY: A-3

DRAWN BY: Veeraraghavan 12/10/97

CHECKED BY

DESIGN APPROVAL

ENGINEER APPROVAL

SUPVR. APPROVAL

DATE

NEXT ASSEMBLY

BROOKHAVEN NATIONAL LABORATORY
ASSOCIATED UNIVERSITIES, INC.
UPTON, N.Y. 11973

E10 F/O CHASSIS

SIZE: D09-E-RD2869

DRAWING NUMBER: A

REV.

MATERIAL: FULL

SCALE: –

WEIGHT: 3

SHEET

FILE "E10F_0.DWG"

*AUTOCAD

REV.	ZONE	ECN NO.	DATE	BY	CKR	APP.

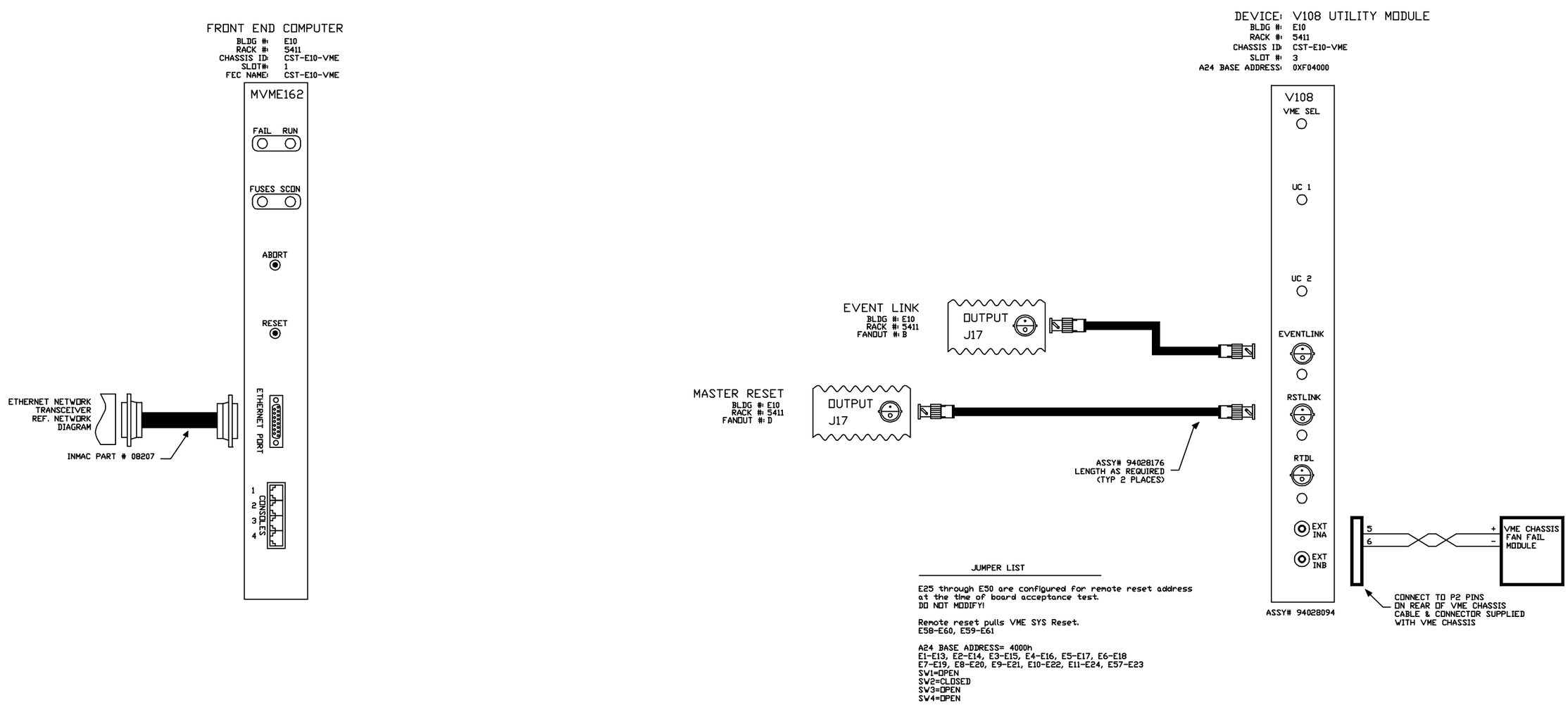

JUMPER LIST

E25 through E50 are configured for remote reset address at the time of board acceptance test.
DO NOT MODIFY!

Remote reset pulls VME SYS Reset.
E58-E60, E59-E61

A24 BASE ADDRESS= 4000h
E1-E13, E2-E14, E3-E15, E4-E16, E5-E17, E6-E18
E7-E19, E8-E20, E9-E21, E10-E22, E11-E24, E57-E23
SW1=OPEN
SW2=CLOSED
SW3=OPEN
SW4=OPEN

E10_V108.DWG

-3	-2	-1	REF DESIGNATOR	ITEM NO.	DESCRIPTION	MAT'L DWG NO./BNL NO.
QTY REQD						

INTERPRET IN GENERAL ACCORDANCE WITH ASME Y14.24M-1989

UNLESS OTHERWISE SPECIFIED DIMENSIONS ARE IN INCHES

DECIMAL TOLERANCES
.X ±.030
.XX ±.015
.XXX ±.005
ANGULAR TOLERANCE
± .5°

NA FINISH

BREAK SHARP EDGES
MAX. XX MIN. XX

OUTSTANDING ECN

Q.A. CATEGORY A-3

		DATE
DRAWN BY	VENEGAS	12/22/97
CHECKED BY		
DESIGN APPROVAL		
ENGINEER APPROVAL		
SUPVR. APPROVAL		

NEXT ASSEMBLY

BROOKHAVEN NATIONAL LABORATORY
ASSOCIATED UNIVERSITIES, INC.
UPTON, N.Y. 11973

AGS CONTROLS WIRING DIAGRAM
VME CHASSIS CST-E10-VME
FT END COMP/V108 UTIL MODULE

SIZE D
DRAWING NUMBER D09-E-RD2865
REV. A

MATERIAL: ——— SCALE: NA WEIGHT: – SHEET 4

*AUTOCAD

REV.	ZONE	ECN NO.	DATE	BY	CKR	APP.

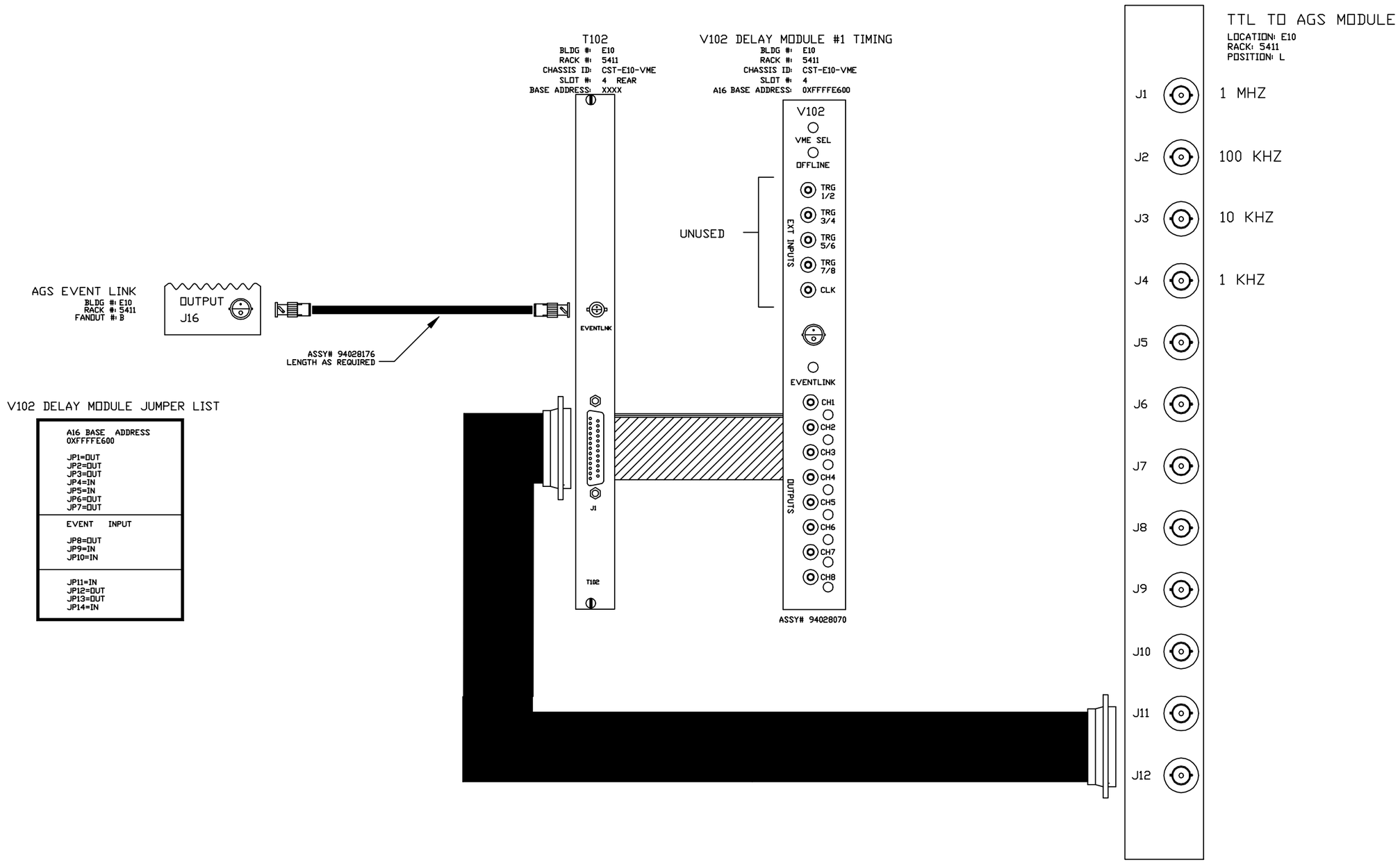

V102 DELAY MODULE JUMPER LIST

A16 BASE ADDRESS 0XFFFFE600 JP1=OUT JP2=OUT JP3=OUT JP4=IN JP5=IN JP6=OUT JP7=OUT
EVENT INPUT JP8=OUT JP9=IN JP10=IN
JP11=IN JP12=OUT JP13=OUT JP14=IN

FILE "E10_102.DWG"

-3	-2	-1	REF DESIGNATOR	ITEM NO.	DESCRIPTION	MAT'L DWG NO./BNL NO.
QTY REQD						

INTERPRET IN GENERAL ACCORDANCE WITH ASME Y14.24M-1989	Q.A. CATEGORY A-3	DATE	BROOKHAVEN NATIONAL LABORATORY ASSOCIATED UNIVERSITIES, INC. UPTON, N.Y. 11973
	DRAWN BY VENEGAS	12/11/97	
UNLESS OTHERWISE SPECIFIED DIMENSIONS ARE IN INCHES	CHECKED BY		AGS CONTROLS WIRING DIAGRAM
DECIMAL TOLERANCES .X ±.030 .XX ±.015 .XXX ±.005 ANGULAR TOLERANCE ± .5°	DESIGN APPROVAL		CST-E10-VME
	ENGINEER APPROVAL		V102 DELAY MODULE #1 TIMING
	SUPVR. APPROVAL		SIZE D — D09-E-RD2862 — REV. A
NA FINISH	BREAK SHARP EDGES MAX. XX MIN. XX	NEXT ASSEMBLY	DRAWING NUMBER
OUTSTANDING ECN			MATERIAL: ——— SCALE: NA WEIGHT: – SHEET 5

*AUTOCAD

REV.	ZONE	ECN NO.	DATE	BY	CKR	APP.

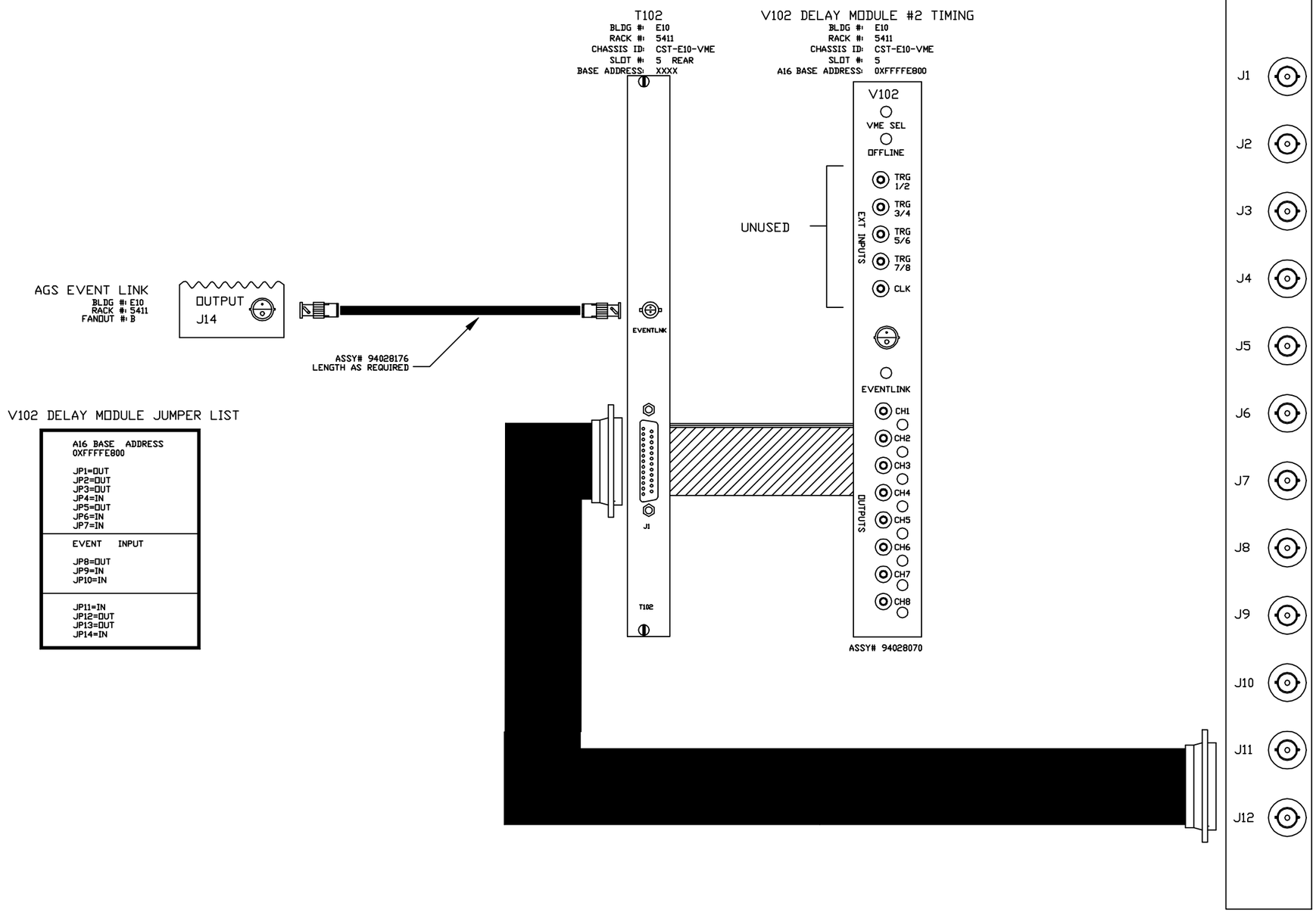

FILE "E10_102_2.DWG"

-3	-2	-1	REF DESIGNATOR	ITEM NO.	DESCRIPTION	MAT'L DWG NO./BNL NO.
QTY REQD						

INTERPRET IN GENERAL ACCORDANCE WITH ASME Y14.24M-1989	Q.A. CATEGORY A-3	DATE	BROOKHAVEN NATIONAL LABORATORY ASSOCIATED UNIVERSITIES, INC. UPTON, N.Y. 11973
UNLESS OTHERWISE SPECIFIED DIMENSIONS ARE IN INCHES	DRAWN BY VENEGAS	12/22/97	AGS CONTROLS WIRING DIAGRAM
DECIMAL TOLERANCES .X ±.030 .XX ±.015 .XXX ±.005 ANGULAR TOLERANCE ± .5°	CHECKED BY		CST-E10-VME
	DESIGN APPROVAL		V102 DELAY MODULE #2 TIMING
	ENGINEER APPROVAL		
	SUPVR. APPROVAL		SIZE D — D09-E-RD2863 — REV. A
NA FINISH	BREAK SHARP EDGES MAX. XX MIN. XX	NEXT ASSEMBLY	DRAWING NUMBER
OUTSTANDING ECN			MATERIAL: ——— SCALE: NA WEIGHT: – SHEET 6

*AUTOCAD

REV.	ZONE	ECN NO.	DATE	BY	CKR	APP.

GPIB 1014 FOR 488 DEVICE CONTROLLERS

BLDG #: E10
RACK #: 5411
CHASSIS ID: CST-E10-VME
SLOT #: 21
A24 BASE ADDRESS: 0XF0002000

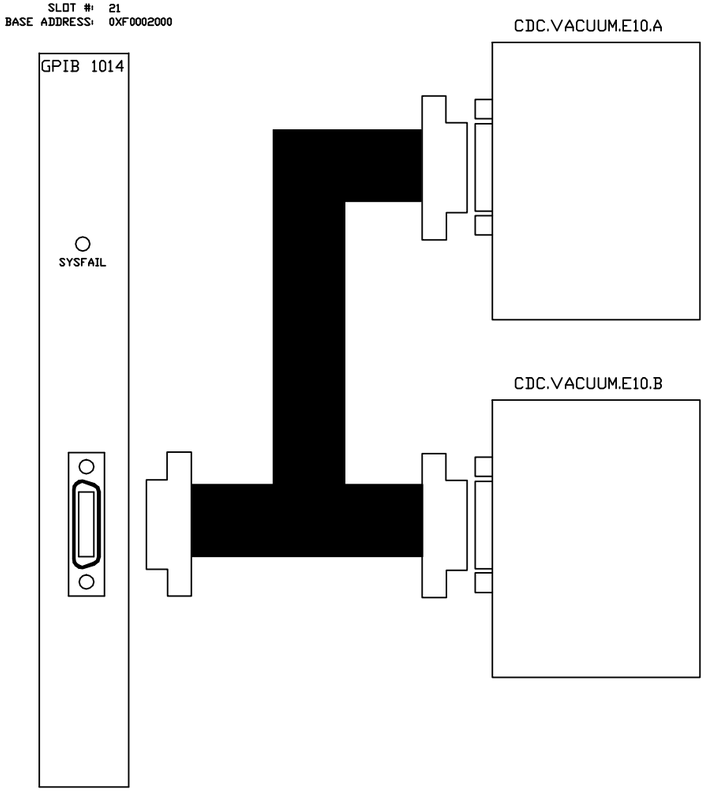

NOTE: JUMPER W3 MUST BE IN ZERO POSITION FOR 162-222 WITH 16 MEG MEMORY

FILE "E10_488.DWG"

-3	-2	-1	REF DESIGNATOR	ITEM NO.	DESCRIPTION	MAT'L. DWG NO.,BNL NO.
QTY REQD						

INTERPRET IN GENERAL ACCORDANCE WITH ASME Y14.24M-1989
UNLESS OTHERWISE SPECIFIED DIMENSIONS ARE IN INCHES
DECIMAL TOLERANCES .X ±.030 .XX ±.015 .XXX ±.005
ANGULAR TOLERANCE ± .5°
OUTSTANDING ECN
NA FINISH
BREAK SHARP EDGES MAX. XX MIN. XX

Q.A. CATEGORY A-3 DATE
DRAWN BY VENEGAS 12/22/97
CHECKED BY
DESIGN APPROVAL
ENGINEER APPROVAL
SUPVR. APPROVAL
NEXT ASSEMBLY

BROOKHAVEN NATIONAL LABORATORY
ASSOCIATED UNIVERSITIES, INC.
UPTON, N.Y. 11973

AGS CONTROLS WIRING DIAGRAM
VME CHASSIS CST-E10-VME
GPIB INTER FOR DEVICE CNTRLS

SIZE D09-E-RD2864 REV.
DRAWING NUMBER
MATERIAL: ——— SCALE: NA WEIGHT: – SHEET 7

*AUTOCAD

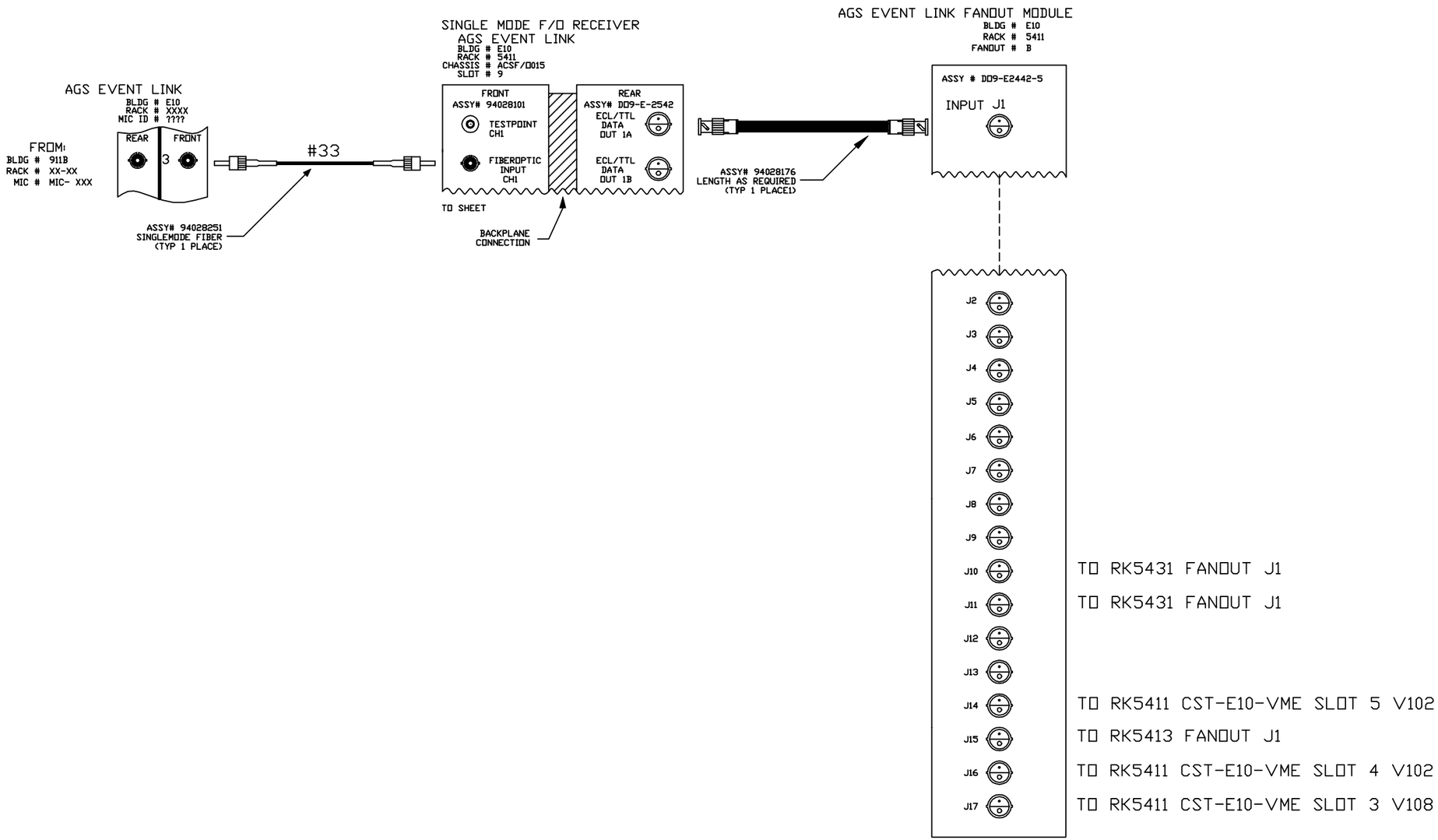

FILE "E10EVENT.DWG"

REV.	ZONE	ECN NO.	DATE	BY	CKR	APP.

-3	-2	-1	REF DESIGNATOR	ITEM NO.	DESCRIPTION	MAT'L. DWG NO.,SPL NO.
QTY REQD						

INTERPRET IN GENERAL ACCORDANCE WITH ASME Y14.24M-1989

UNLESS OTHERWISE SPECIFIED DIMENSIONS ARE IN INCHES

DECIMAL TOLERANCES
.X ±.030
.XX ±.015
.XXX ±.005
ANGULAR TOLERANCE
± .5°

NA FINISH

BREAK SHARP EDGES
MAX. XX MIN. XX

OUTSTANDING ECN

Q.A. CATEGORY A-3

		DATE
DRAWN BY	VENEGAS	12/19/97
CHECKED BY		
DESIGN APPROVAL		
ENGINEER APPROVAL		
SUPVR. APPROVAL		

NEXT ASSEMBLY

BROOKHAVEN NATIONAL LABORATORY
ASSOCIATED UNIVERSITIES, INC.
UPTON, N.Y. 11973

AGS CONTROLS WIRING DIAGRAM

E10

AGS EVENT LINK

SIZE D

D09-E-RD2867

DRAWING NUMBER

REV. A

MATERIAL: ——— SCALE: NA WEIGHT: – SHEET 8

*AUTOCAD

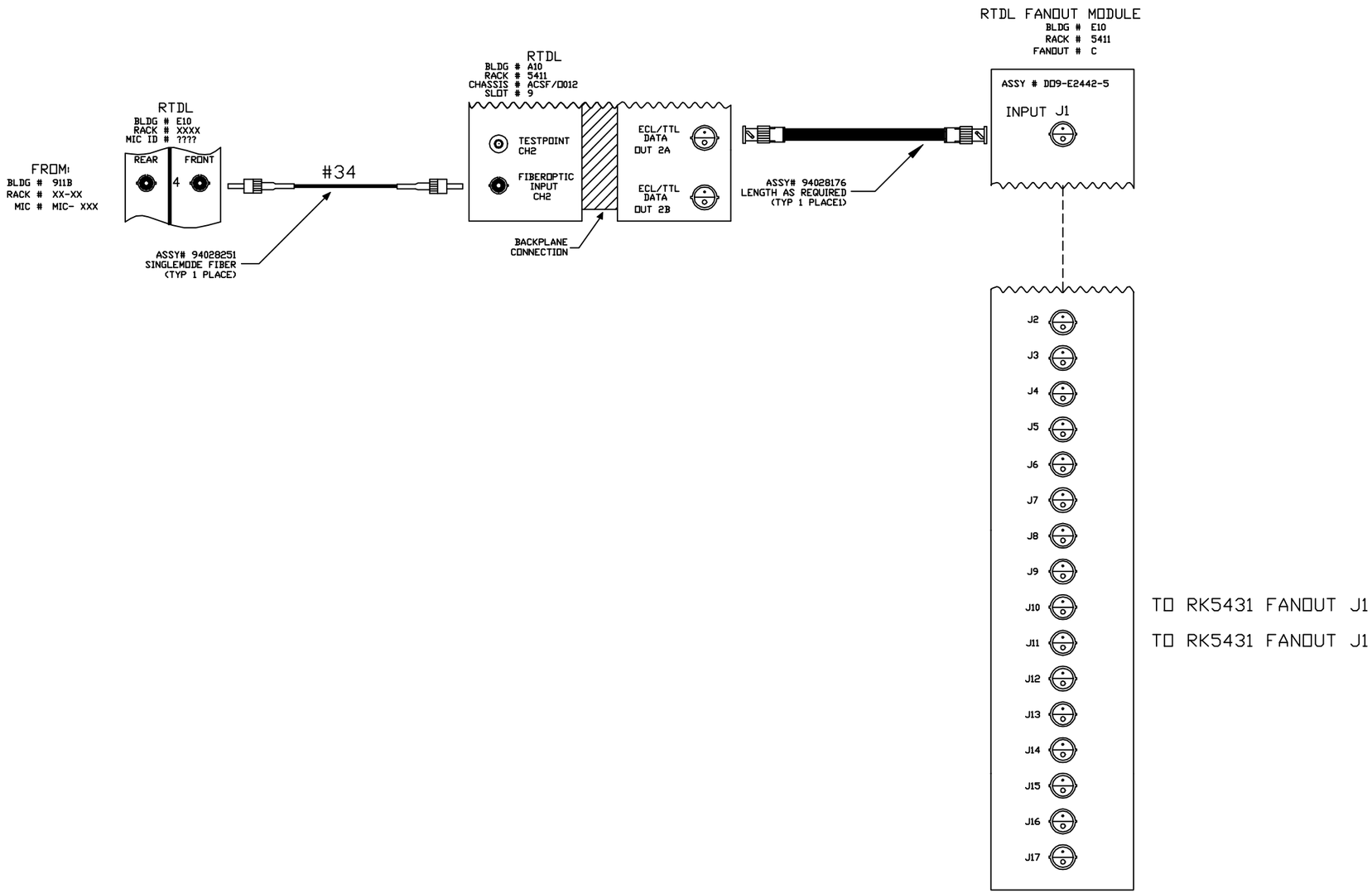

FILE "E10RTDL.DWG"

REV.	ZONE	ECN NO.	DATE	BY	CKR	APP.

-3	-2	-1	REF DESIGNATOR	ITEM NO.	DESCRIPTION	MAT'L DWG NO.,BRL NO.
QTY REQD						

INTERPRET IN GENERAL ACCORDANCE WITH ASME Y14.24M-1989

UNLESS OTHERWISE SPECIFIED DIMENSIONS ARE IN INCHES

DECIMAL TOLERANCES
.X ±.030
.XX ±.015
.XXX ±.005
ANGULAR TOLERANCE
± .5°

NA FINISH

BREAK SHARP EDGES
MAX. XX MIN. XX

OUTSTANDING ECN

Q.A. CATEGORY A-3

		DATE
DRAWN BY	VENEGAS	12/19/97
CHECKED BY		
DESIGN APPROVAL		
ENGINEER APPROVAL		
SUPVR. APPROVAL		

NEXT ASSEMBLY

BROOKHAVEN NATIONAL LABORATORY
ASSOCIATED UNIVERSITIES, INC.
UPTON, N.Y. 11973

AGS CONTROLS WIRING DIAGRAM

E10

RTDL

SIZE D

D09-E-RD2872

DRAWING NUMBER

REV. A

MATERIAL: ——— SCALE: NA WEIGHT: – SHEET 9

*AUTOCAD

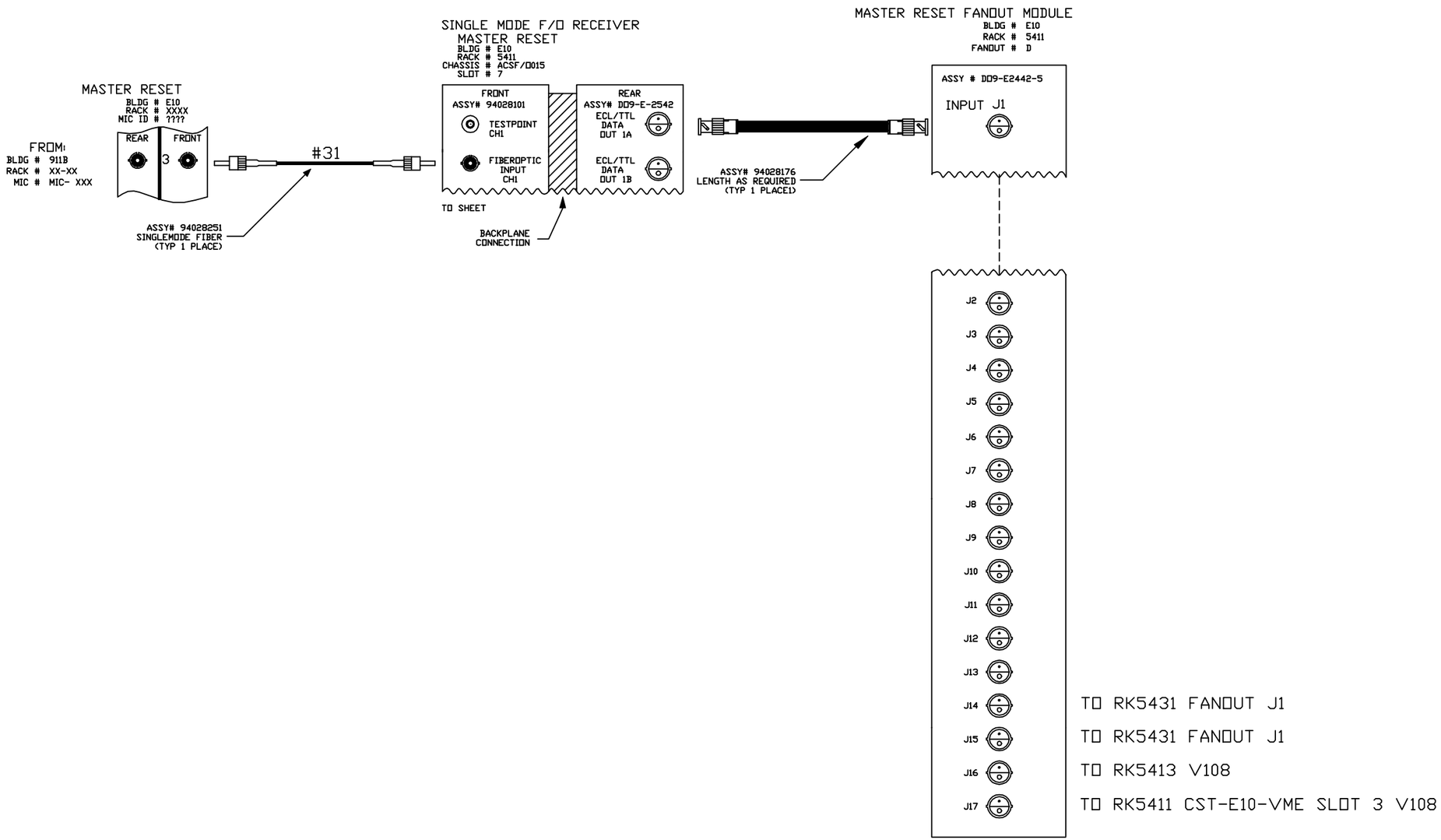

FILE "E10RESET.DWG"

REV.	ZONE	ECN NO.	DATE	BY	CKR	APP.

-3	-2	-1	REF DESIGNATOR	ITEM NO.	DESCRIPTION	MAT'L. DWG NO.,SPL NO.
QTY REQD						

INTERPRET IN GENERAL ACCORDANCE WITH ASME Y14.24M-1989

UNLESS OTHERWISE SPECIFIED DIMENSIONS ARE IN INCHES

DECIMAL TOLERANCES
.X ±.030
.XX ±.015
.XXX ±.005
ANGULAR TOLERANCE
± .5°

NA FINISH

BREAK SHARP EDGES
MAX. XX MIN. XX

OUTSTANDING ECN

Q.A. CATEGORY A-3		DATE
DRAWN BY	VENEGAS	12/19/97
CHECKED BY		
DESIGN APPROVAL		
ENGINEER APPROVAL		
SUPVR. APPROVAL		

NEXT ASSEMBLY

BROOKHAVEN NATIONAL LABORATORY
ASSOCIATED UNIVERSITIES, INC.
UPTON, N.Y. 11973

AGS CONTROLS WIRING DIAGRAM

E10

MASTER RESET

SIZE D | DRAWING NUMBER D09-E-RD2871 | REV. A

MATERIAL: ——— | SCALE: NA | WEIGHT: – | SHEET 10

*AUTOCAD

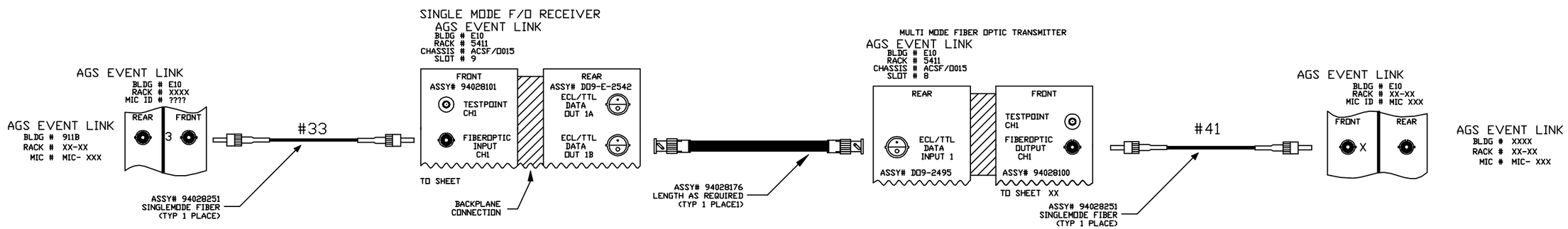

FILE "E10EVRPT.DWG"

-3	-2	-1	REF DESIGNATOR	ITEM NO.	DESCRIPTION	MAT'L. DWG NO.,SPEC. NO.
QTY REQD						

INTERPRET IN GENERAL ACCORDANCE WITH ASME Y14.24M-1989

UNLESS OTHERWISE SPECIFIED DIMENSIONS ARE IN INCHES

DECIMAL TOLERANCES
.X ±.030
.XX ±.015
.XXX ±.005
ANGULAR TOLERANCE ± .5°

NA FINISH

BREAK SHARP EDGES MAX. XX MIN. XX

OUTSTANDING ECN

Q.A. CATEGORY A-3		DATE
DRAWN BY	VENEGAS	12/19/97
CHECKED BY		
DESIGN APPROVAL		
ENGINEER APPROVAL		
SUPVR. APPROVAL		

NEXT ASSEMBLY

BROOKHAVEN NATIONAL LABORATORY
ASSOCIATED UNIVERSITIES, INC.
UPTON, N.Y. 11973

AGS CONTROLS WIRING DIAGRAM

E10

AGS EVENT LINK RETRANSMIT

SIZE D — DRAWING NUMBER D09-E-RD2868 — REV. A

MATERIAL: ——— SCALE: NA WEIGHT: – SHEET 11

*AUTOCAD

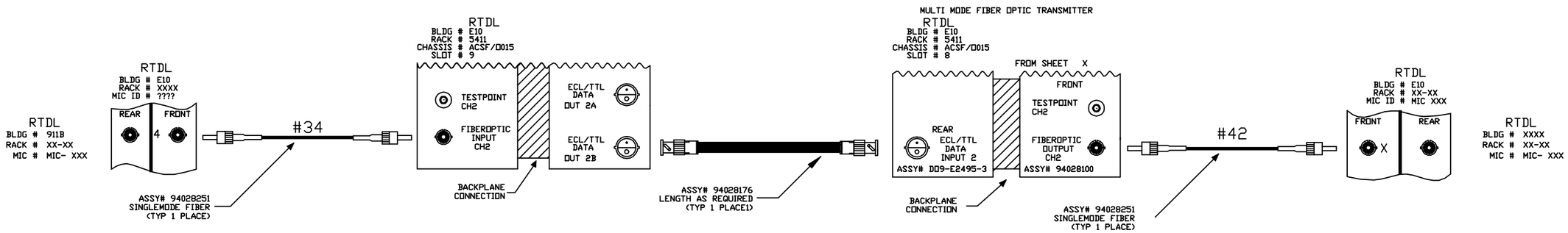

FILE "E10RTRPT.DWG"

REV.	ZONE	ECN NO.	DATE	BY	CKR	APP.

-3	-2	-1	REF DESIGNATOR	ITEM NO.	DESCRIPTION	MAT'L DWG NO./DWL NO.
QTY REQD						

INTERPRET IN GENERAL ACCORDANCE WITH ASME Y14.24M-1989

UNLESS OTHERWISE SPECIFIED DIMENSIONS ARE IN INCHES

DECIMAL TOLERANCES
.X ±.030
.XX ±.015
.XXX ±.005
ANGULAR TOLERANCE
± .5°

FINISH: NA ✓ BREAK SHARP EDGES MAX. XX MIN. XX

OUTSTANDING ECN

Q.A. CATEGORY A-3

		DATE
DRAWN BY	VENEGAS	12/19/97
CHECKED BY		
DESIGN APPROVAL		
ENGINEER APPROVAL		
SUPVR. APPROVAL		

NEXT ASSEMBLY

BROOKHAVEN NATIONAL LABORATORY
ASSOCIATED UNIVERSITIES, INC.
UPTON, N.Y. 11973

AGS CONTROLS WIRING DIAGRAM

E10

RTDL RETRANSMIT

SIZE D | DRAWING NUMBER D09-E-RD2873 | REV. A

MATERIAL: ——— SCALE: NA WEIGHT: – SHEET 12

1 *AUTOCAD

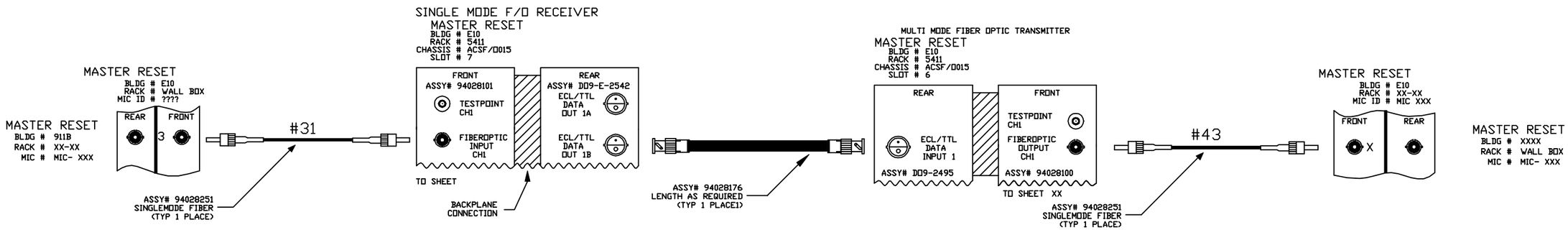

FILE "E10RERPT.DWG"

-3	-2	-1	REF DESIGNATOR	ITEM NO.	DESCRIPTION	MAT'L. DWG NO.,SPEC. NO.
QTY REQD						

INTERPRET IN GENERAL ACCORDANCE WITH ASME Y14.24M-1989

UNLESS OTHERWISE SPECIFIED DIMENSIONS ARE IN INCHES

DECIMAL TOLERANCES
.X ±.030
.XX ±.015
.XXX ±.005
ANGULAR TOLERANCE
± .5°

NA FINISH

BREAK SHARP EDGES
MAX. XX MIN. XX

OUTSTANDING ECN

Q.A. CATEGORY A-3		DATE
DRAWN BY	VENEGAS	12/31/97
CHECKED BY		
DESIGN APPROVAL		
ENGINEER APPROVAL		
SUPVR. APPROVAL		

NEXT ASSEMBLY

BROOKHAVEN NATIONAL LABORATORY
ASSOCIATED UNIVERSITIES, INC.
UPTON, N.Y. 11973

AGS CONTROLS WIRING DIAGRAM

E10

RESET RETRANSMIT

SIZE D | D09-E-RD2870 | REV. A

DRAWING NUMBER

MATERIAL: ——— | SCALE: NA | WEIGHT: – | SHEET 13

1 *AUTOCAD