REV.	ZONE	ECN NO.	DATE	BY	CKR	APP.

BNL, BNL 12/28/00 1:03 PM D09-E-RD2834.dwg

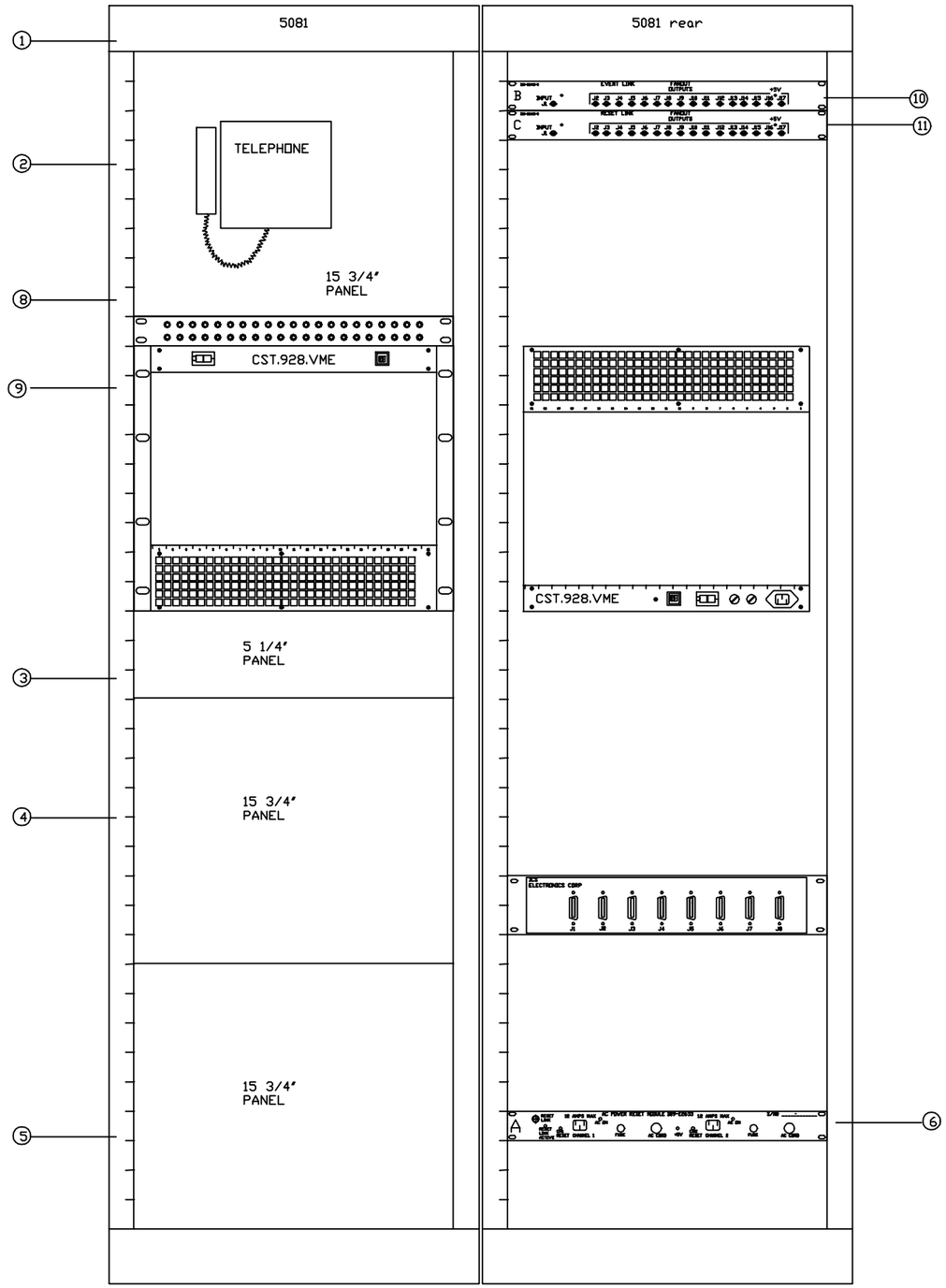

488 controller list
CDC.AGS.SYNCLK
CDC.AMM.PS

QTY REQD -3	QTY REQD -2	QTY REQD -1	REF DESIGNATOR	ITEM NO.	DESCRIPTION	MAT'L DWG NO.,BNL NO.
		2	10,11	8	EVENT/RESET LINK FANOUT	
		1	9	7	6U VME CHASSIS CST.928.VME	
		1	8	6	GROMMET PANEL	
		1	6	4	AC RESET MODULE	
		1	3	3	5 1/4" blank panel	
		2	4.5	2	15 3/4" blank panel	
		1	1	1	70" RACK	X

INTERPRET IN GENERAL ACCORDANCE WITH ASME Y14.24M-1989

UNLESS OTHERWISE SPECIFIED DIMENSIONS ARE IN INCHES

DECIMAL TOLERANCES
.X ±.030
.XX ±.015
.XXX ±.005
ANGULAR TOLERANCE
± .5°

OUTSTANDING ECN

NA FINISH

BREAK SHARP EDGES
MAX. XX MIN. XX

Q.A. CATEGORY A-3

		DATE
DRAWN BY	JAPPE	2/4/2000
CHECKED BY		
DESIGN APPROVAL		
ENGINEER APPROVAL		
SUPVR. APPROVAL		

NEXT ASSEMBLY

BROOKHAVEN NATIONAL LABORATORY
UPTON, N.Y. 11973
CA Division
SIEMANS Rack 5081 Layout
CST.928.VME

SIZE A | DRAWING NUMBER D09-E-RD2834 | REV. A

MATERIAL: ——— SCALE: FULL WEIGHT: – SHEET 1

*AUTOCAD

REV.	ZONE	ECN NO.	DATE	BY	CKR	APP.

BNL, BNL 12/28/00 1:04 PM D09-E-RD2835.dwg

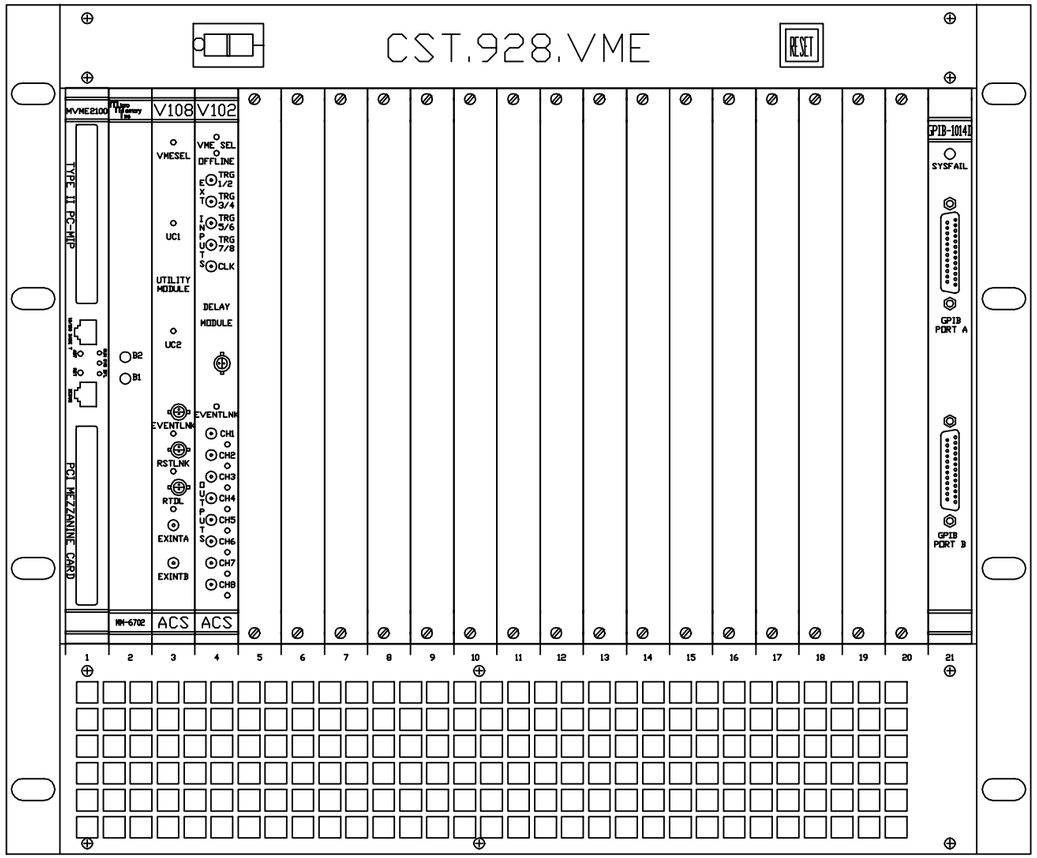

FRONT VIEW

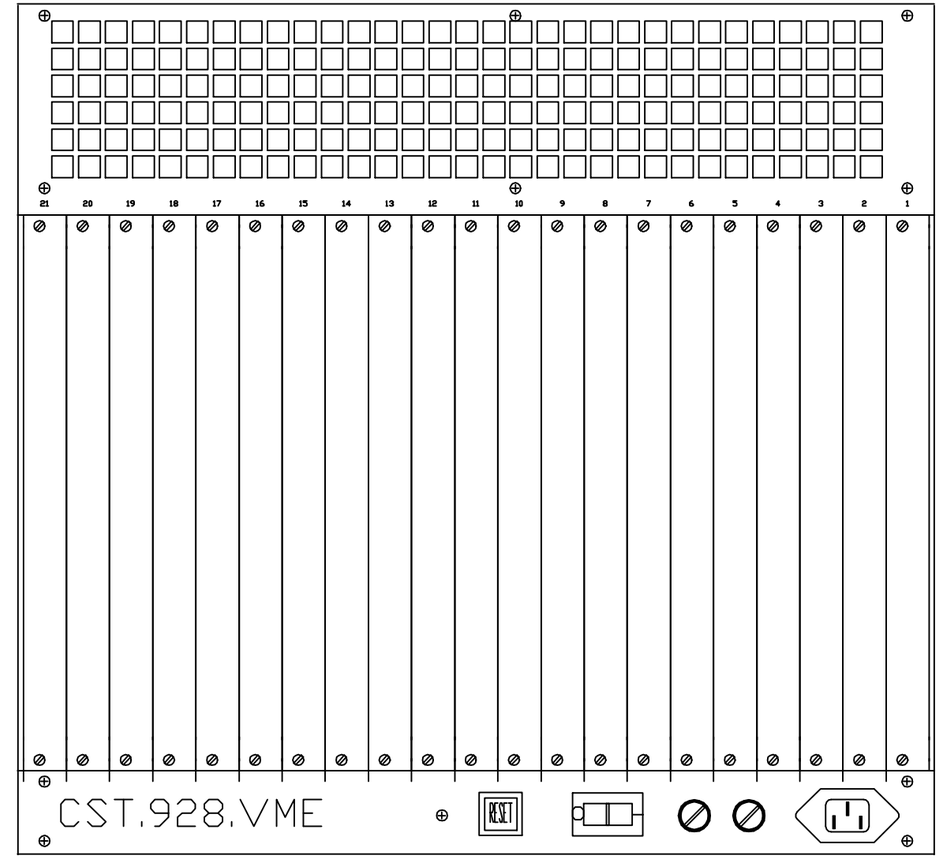

REAR VIEW

NOTE:

1. ALL UNUSED SLOTS, FRONT AND REAR

-3	-2	-1	REF DESIGNATOR	ITEM NO.	DESCRIPTION	MAT'L DWG NO.,BNL NO.
		-	-	-	-	-
		1	SLOT 21	6	ALLEN BRADLEY 1014D 488 GPIB CONTRLLER	-
		1	SLOT 4	5	V102 DELAY MODULES	94028072
		1	SLOT 3	4	V108 UTILITY MODULE	94028094
		1	SLOT 2	3	MEMORY BOARD	MM-6702
		1	SLOT 1	2	FRONT END COMPUTER	POWER3E
		1	N/A	1	VME CHASSIS	RHIC-93008000

QTY REQD

INTERPRET IN GENERAL ACCORDANCE WITH ASME Y14.24M-1989

UNLESS OTHERWISE SPECIFIED DIMENSIONS ARE IN INCHES

DECIMAL TOLERANCES
.X ±.030
.XX ±.015
.XXX ±.005
ANGULAR TOLERANCE
± .5°

OUTSTANDING ECN

NA FINISH

BREAK SHARP EDGES
MAX. XX MIN. XX

Q.A. CATEGORY A-3

		DATE
DRAWN BY	Jappe	2/4/2000
CHECKED BY		
DESIGN APPROVAL		
ENGINEER APPROVAL		
SUPVR. APPROVAL		

NEXT ASSEMBLY

BROOKHAVEN NATIONAL LABORATORY
UPTON, N.Y. 11973

CAD CONTROLS

BLDG. 928 RACK 5081

VME CHASSIS CST.928.VME

SIZE A | DRAWING NUMBER D09-E-RD2835 | REV. A

MATERIAL: ——— SCALE: NA WEIGHT: - SHEET 2

*AUTOCAD

BNL, BNL 12/28/00 1:06 PM D09-E-RD2836.dwg

REV.	ZONE	ECN NO.	DATE	BY	CKR	APP.

FRONT END COMPUTER
BLDG #: 928
RACK #: 5081
CHASSIS ID: CST.928.VME
SLOT#: 1
FEC NAME: CST.928.VME

DEVICE: MM-6702 MEMORY MODULE
BLDG #: 928
RACK #: 5081
CHASSIS ID: CST.928.VME
SLOT #: 2
A24 BASE ADDRESS: XXX

DEVICE: V108 UTILITY MODULE
BLDG #: 928
RACK #: 5081
CHASSIS ID: CST.928.VME
SLOT #: 3
A24 BASE ADDRESS: 0XF0004000

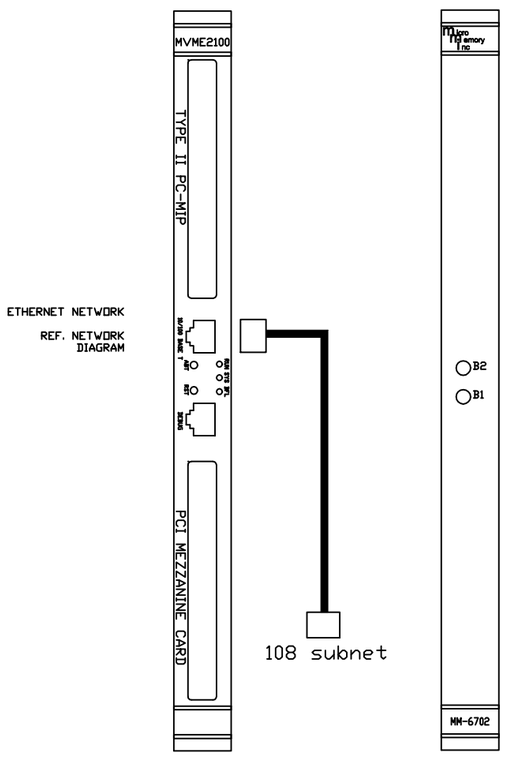

JUMPER LIST
1. REMOVE E1.
2. INSTALL E15.
3. SW3 CLOSE ALL POSITIONS.
4. SW2 CLOSE POSITIONS 7 AND 8.
5. SW1 CLOSE POSITIONS 2-8.
6. INSTALL E14 AND E25 TO ENABLE BATTERIES

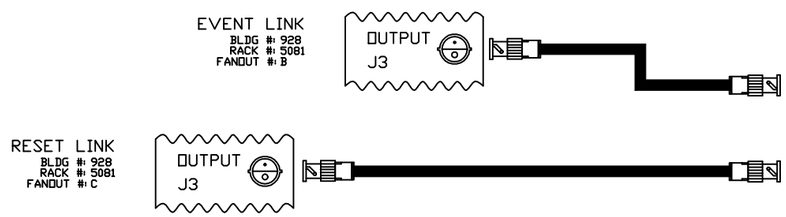

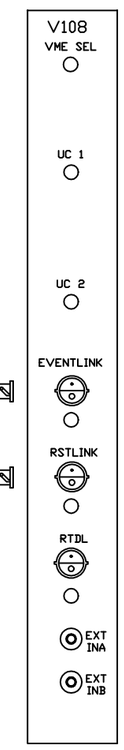

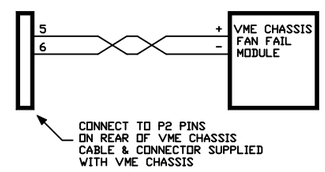

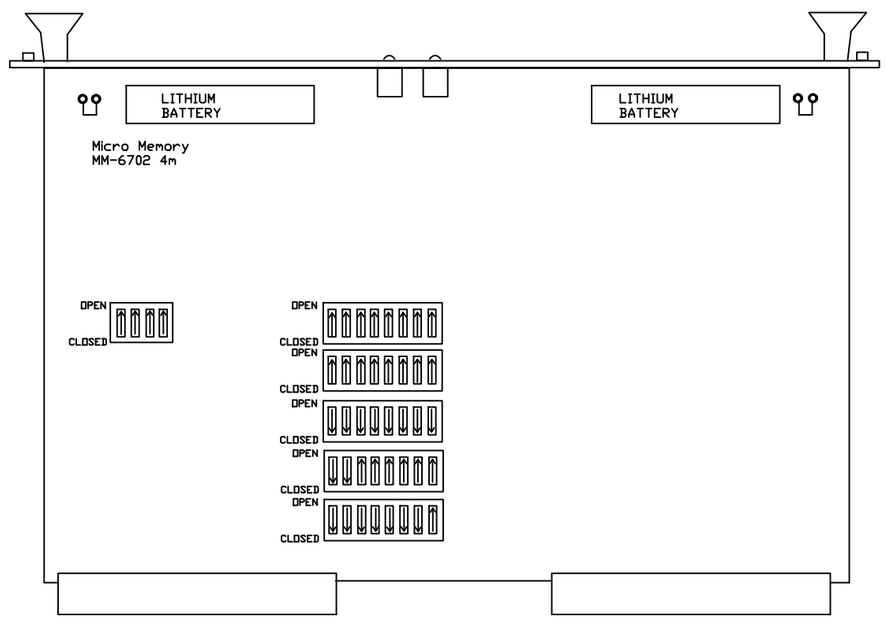

JUMPER LIST

E25 through E50 are configured for remote reset address at the time of board acceptance test.
DO NOT MODIFY!

Remote reset pulls VME SYS Reset.
E58-E60, E59-E61

A24 BASE ADDRESS= 4000h
E57-E13, E2-E14, E3-E15, E4-E16, E5-E17, E6-E18
E7-E19, E8-E20, E9-E21, E10-E22, E11-E24, E57-E23
SW1=OPEN
SW2=CLOSED
SW3=OPEN
SW4=OPEN

TO SET UP BOOT PARAMS FOR THE FEC
ON A X-TERM RUN StartUp
Top of StartUp

go to diagnostics
then Servers
then AGS VME stations
then pick a station you want the params for
then fec diagnostics
then Show Boot Params (PPC) (power PC)

-3	-2	-1	REF DESIGNATOR	ITEM NO.	DESCRIPTION	MAT'L DWG NO./BNL NO.
QTY REQD						

INTERPRET IN GENERAL ACCORDANCE WITH ASME Y14.24M-1989
UNLESS OTHERWISE SPECIFIED DIMENSIONS ARE IN INCHES
DECIMAL TOLERANCES .X ±XXX .XX ±XXX .XXX ±XXX
ANGULAR TOLERANCE ± XXX
FINISH NA
BREAK SHARP EDGES MAX. XX MIN. XX
OUTSTANDING ECN

Q.A. CATEGORY A-3
DRAWN BY Jappe DATE 2/4/2000
CHECKED BY
DESIGN APPROVAL
ENGINEER APPROVAL
SUPVR. APPROVAL
NEXT ASSEMBLY

BROOKHAVEN NATIONAL LABORATORY
ASSOCIATED UNIVERSITIES, INC.
UPTON, N.Y. 11973

CAD WIRING DIAGRAM
928 VME CHASSIS CST.928.VME
CPU/MEMORY /V108 UTIL MODULE

SIZE A
DRAWING NUMBER D09-E-RD2836
REV. A
MATERIAL: ——— SCALE: NA WEIGHT: – SHEET 3

*AUTOCAD

REV.	ZONE	ECN NO.	DATE	BY	CKR	APP.

BNL, BNL 12/28/00 1:07 PM D09-E-RD2837.dwg

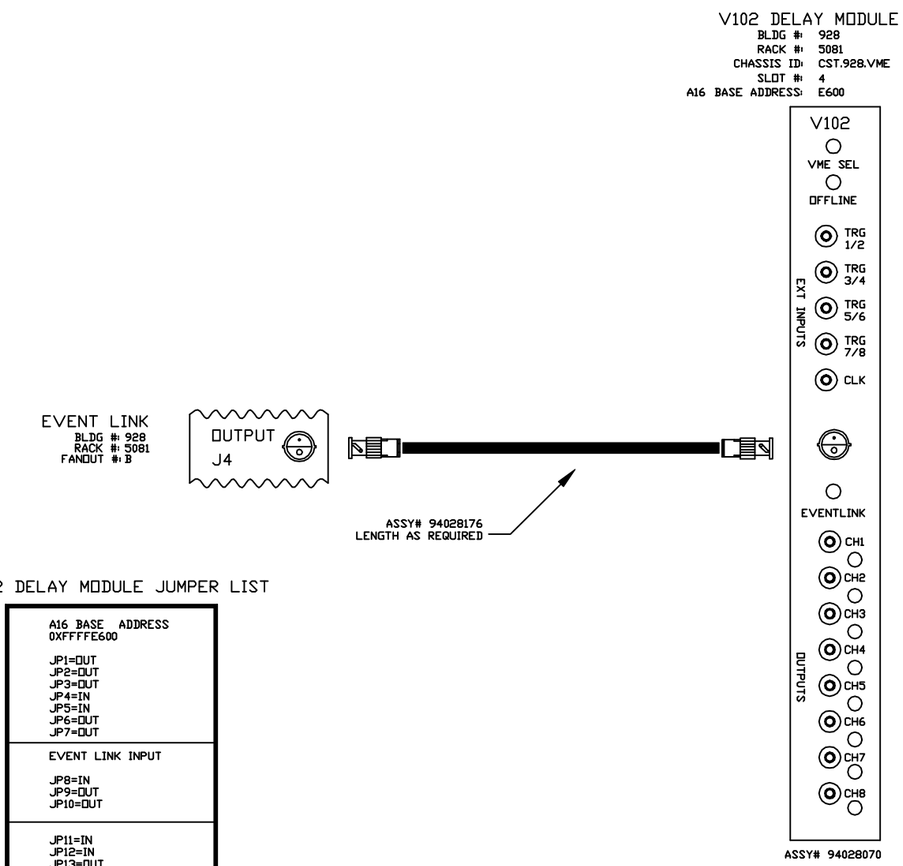

V102 DELAY MODULE JUMPER LIST

A16 BASE ADDRESS 0XFFFFE600 JP1=OUT JP2=OUT JP3=OUT JP4=IN JP5=IN JP6=OUT JP7=OUT
EVENT LINK INPUT JP8=IN JP9=OUT JP10=OUT
JP11=IN JP12=IN JP13=OUT JP14=IN

-3	-2	-1	REF DESIGNATOR	ITEM NO.	DESCRIPTION	MAT'L. DWG NO./BNL NO.
QTY REQD						

INTERPRET IN GENERAL ACCORDANCE WITH ASME Y14.24M-1989	Q.A. CATEGORY A-3	DATE	BROOKHAVEN NATIONAL LABORATORY
	DRAWN BY Warren Jappe	2/4/2000	UPTON, N.Y. 11973
UNLESS OTHERWISE SPECIFIED DIMENSIONS ARE IN INCHES	CHECKED BY		CAD WIRING DIAGRAM
DECIMAL TOLERANCES .X ±XXX .XX ±XXX .XXX ±XXX ANGULAR TOLERANCE ± XXX	DESIGN APPROVAL		BLDG.928 CHASSIS CST.928.VME
	ENGINEER APPROVAL		V102 DELAY MODULE
	SUPVR. APPROVAL		SIZE A — D09-E-RD2837 — REV. A
OUTSTANDING ECN — NA FINISH — BREAK SHARP EDGES MAX. XX MIN. XX	NEXT ASSEMBLY		DRAWING NUMBER
			MATERIAL: ——— SCALE: NA WEIGHT: SHEET 4

*AUTOCAD

REV.	ZONE	ECN NO.	DATE	BY	CKR	APP.

BNL, BNL 12/28/00 1:26 PM D09-E-RD2838.dwg

GPIB
BLDG #: 928
RACK #: 5081
CHASSIS ID: CST.928.VME
SLOT #: 21
BASE ADDRESS: 002000

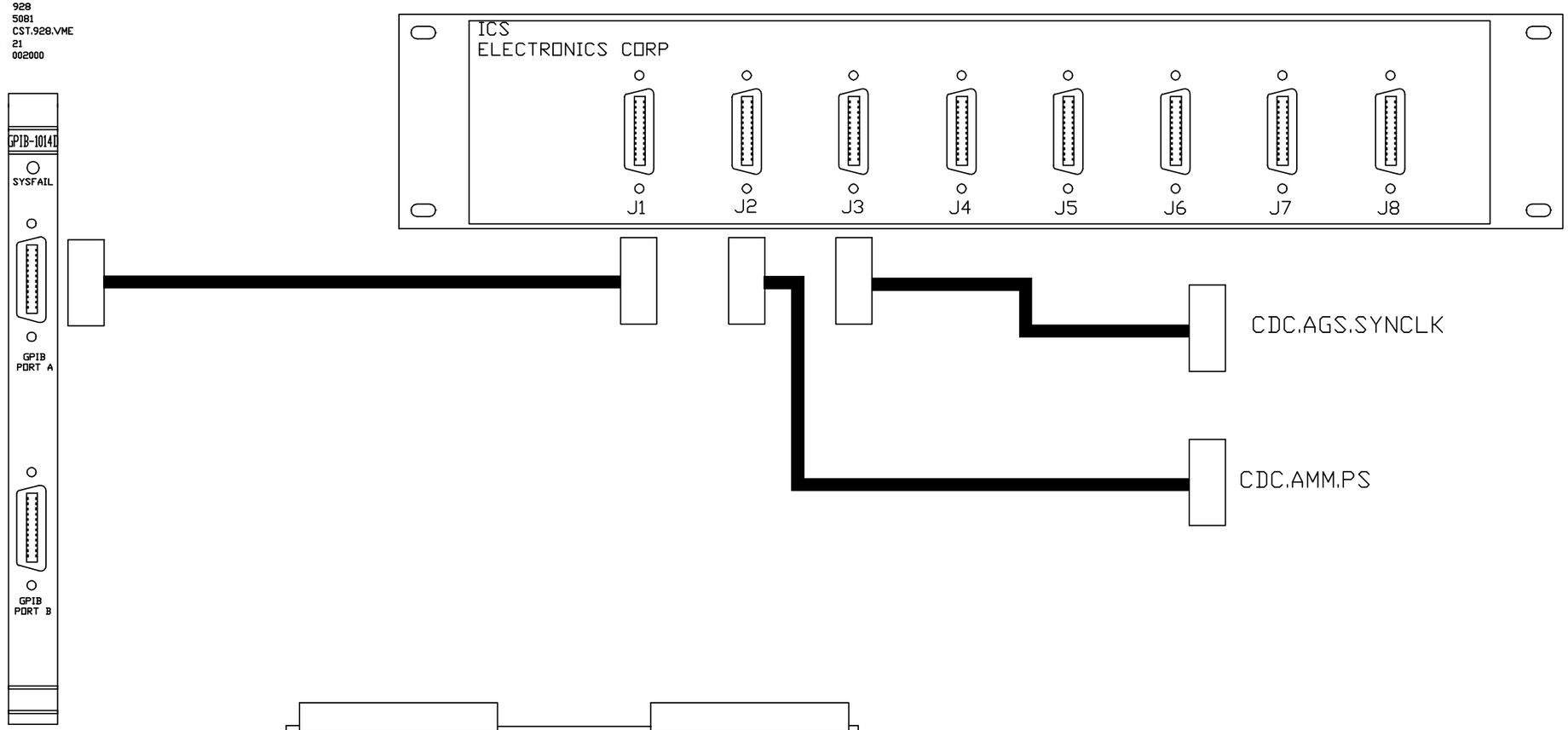

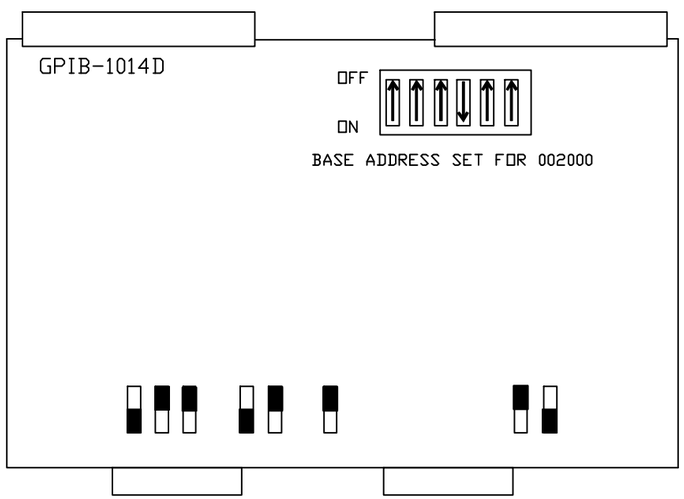

-3	-2	-1	REF DESIGNATOR	ITEM NO.	DESCRIPTION	MAT'L. DWG NO./BNL NO.
QTY REQD						

INTERPRET IN GENERAL ACCORDANCE WITH ASME Y14.24M-1989

UNLESS OTHERWISE SPECIFIED DIMENSIONS ARE IN INCHES

DECIMAL TOLERANCES
.X ±.030
.XX ±
.XXX ±
ANGULAR TOLERANCE
±

NA FINISH

BREAK SHARP EDGES
MAX. XX MIN. XX

OUTSTANDING ECN

Q.A. CATEGORY A-3		DATE
DRAWN BY	Warren Jappe	2/4/00
CHECKED BY		
DESIGN APPROVAL		
ENGINEER APPROVAL		
SUPVR. APPROVAL		

NEXT ASSEMBLY

BROOKHAVEN NATIONAL LABORATORY
UPTON, N.Y. 11973

CAD WIRING DIAGRAM

BLDG. 928 CST.928.VME

GPIB wiring detail

SIZE A | D09-E-RD2838 | REV. A

DRAWING NUMBER

MATERIAL: n/a SCALE: n/a WEIGHT: - SHEET 5

*AUTOCAD

BNL, BNL 12/28/00 1:28 PM D09-E-RD2839.dwg

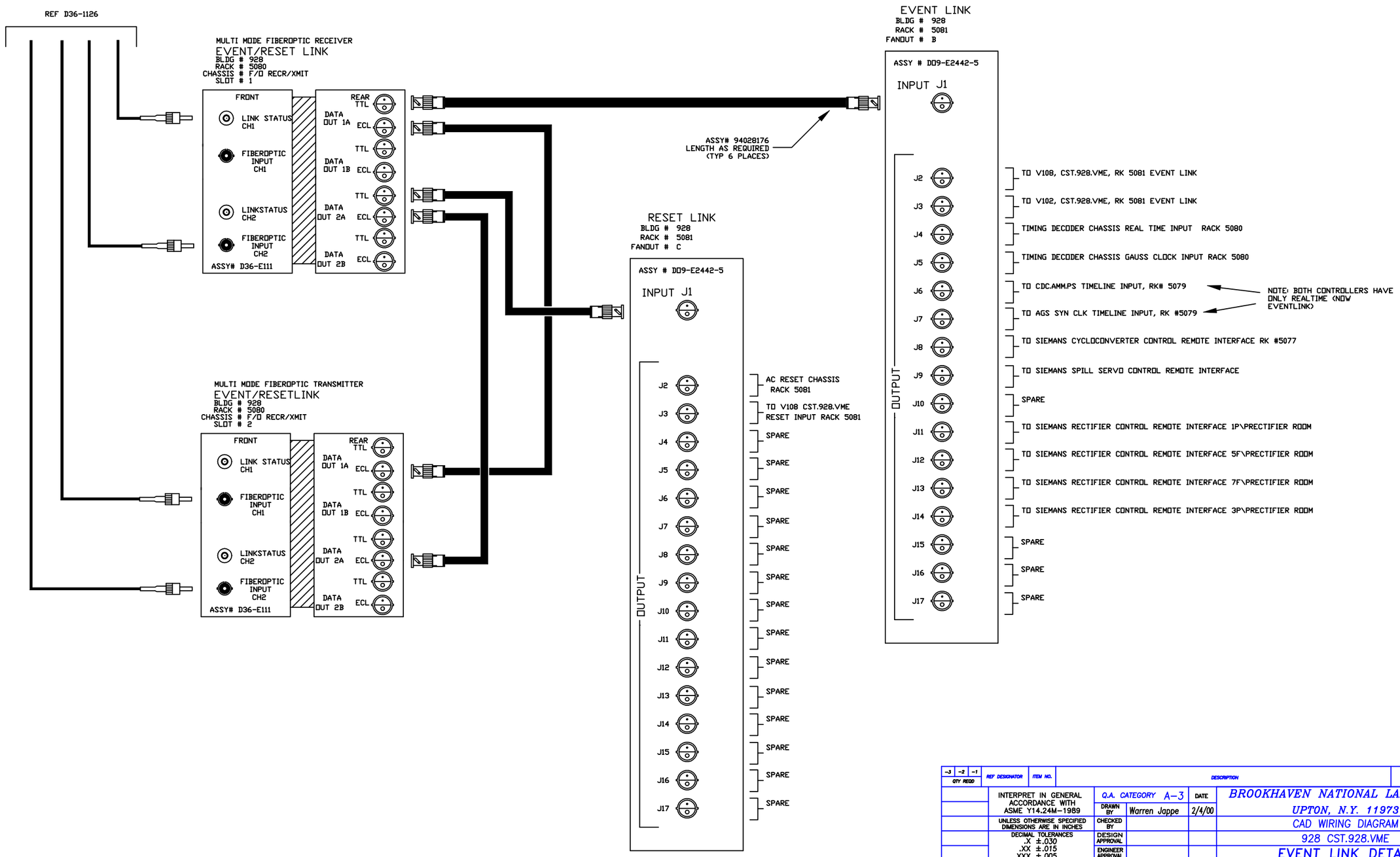

-3	-2	-1	REF DESIGNATOR	ITEM NO.	DESCRIPTION	MAT'L DWG NO.,BNL NO.
QTY REQD						

INTERPRET IN GENERAL ACCORDANCE WITH ASME Y14.24M-1989

UNLESS OTHERWISE SPECIFIED DIMENSIONS ARE IN INCHES

DECIMAL TOLERANCES .X ±.030 .XX ±.015 .XXX ±.005 ANGULAR TOLERANCE ± .5°

OUTSTANDING ECN

NA FINISH

BREAK SHARP EDGES MAX. XX MIN. XX

Q.A. CATEGORY A-3

		DATE
DRAWN BY	Warren Jappe	2/4/00
CHECKED BY		
DESIGN APPROVAL		
ENGINEER APPROVAL		
SUPVR. APPROVAL		

NEXT ASSEMBLY

BROOKHAVEN NATIONAL LABORATORY
UPTON, N.Y. 11973

CAD WIRING DIAGRAM

928 CST.928.VME

EVENT LINK DETAIL

SIZE A | DRAWING NUMBER D09-E-RD2839 | REV. A

MATERIAL: ——— SCALE: NA WEIGHT: – SHEET 6

*AUTOCAD

REV.	ZONE	ECN NO.	DATE	BY	CKR	APP.

BNL, BNL 12/28/00 1:40 PM D09-E-RD2840.dwg

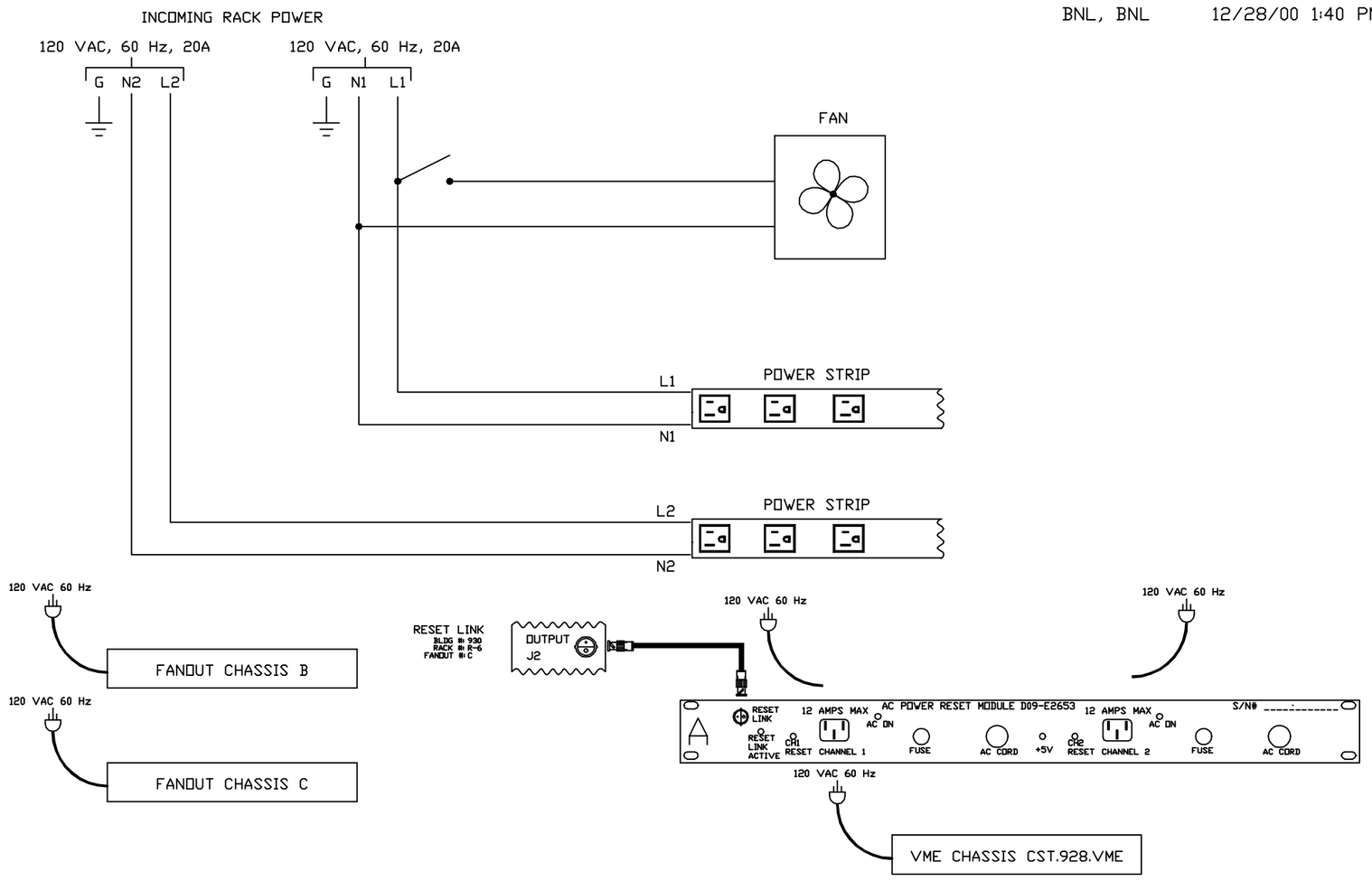

NOTE: ALL 120 VAC, 60 Hz POWER CORDS
PLUG INTO POWER STRIP OUTLETS EXCEPT FOR 6U VME CHASSIS

-3	-2	-1	REF DESIGNATOR	ITEM NO.	DESCRIPTION	MAT'L DWG NO./BNL NO.
QTY REQD						

INTERPRET IN GENERAL ACCORDANCE WITH ASME Y14.24M-1989

UNLESS OTHERWISE SPECIFIED DIMENSIONS ARE IN INCHES

DECIMAL TOLERANCES
.X ±.030
.XX ±.015
.XXX ±.005
ANGULAR TOLERANCE ± .5°

OUTSTANDING ECN

NA FINISH

BREAK SHARP EDGES MAX. XX MIN. XX

Q.A. CATEGORY A-3		DATE
DRAWN BY	Jappe	3/22/00
CHECKED BY		
DESIGN APPROVAL		
ENGINEER APPROVAL		
SUPVR. APPROVAL		

NEXT ASSEMBLY

BROOKHAVEN NATIONAL LABORATORY
ASSOCIATED UNIVERSITIES, INC.
UPTON, N.Y. 11973

CAD WIRING DIAGRAM

SIEMANS RACK 5081

POWER DISTRIBUTION

SIZE | D09-E-RD2840 | REV.

DRAWING NUMBER

MATERIAL: ——— SCALE: NA WEIGHT: SHEET 8

*AUTOCAD