REV.	ZONE	ECN NO.	DATE	BY	CKR	APP.

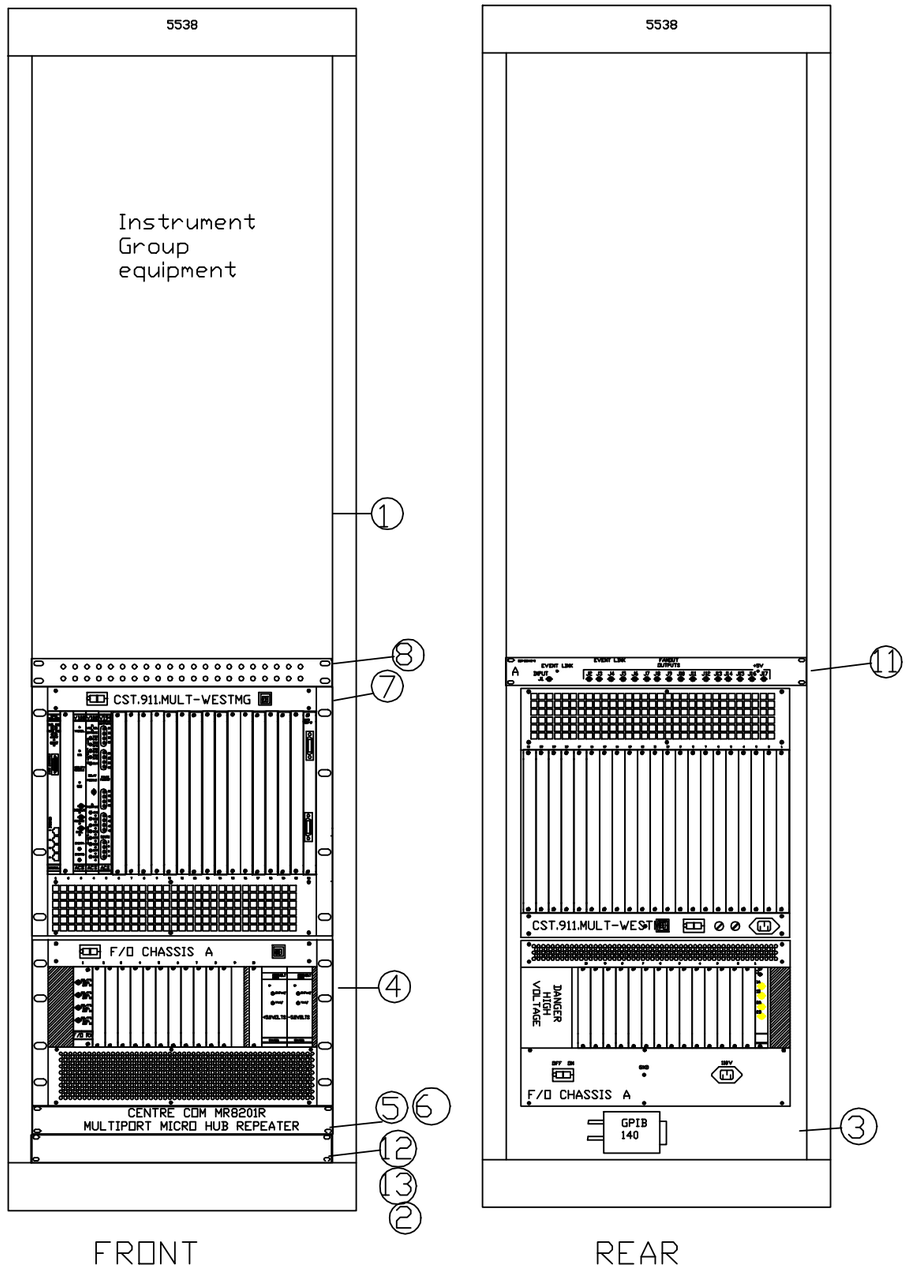

-3	-2	-1	QTY REQD	REF DESIGNATOR	ITEM NO.	DESCRIPTION	MAT'L DWG NO.,BNL NO.
				16	16		XXXX
				15	15		XXXX
				14	14		XXXX
			36	13	13	WASHER FINISHING	T84230
			36	12	12	OVAL HEAD SCREW 10-32 X 5/8	T59100
			1	11	11	FANOUT CHASSIS	DD9-E2442-5
				10	10		
				9	9		
			1	8	8	GROMMET PANEL	X
			1	7	7	VME CHASSIS	X
			1	6	6	ETHERNET TRANSCIEVER	MX20T
			1	5	5	ETHERNET HUB REPEATER	MR820TR
			1	4	4	3U F/O CHASSIS	X
			1	3	3	GPIB140	
			1	2	2	1.75"BLANK PANEL	A45501
			1	1	1	RACK	X

INTERPRET IN GENERAL ACCORDANCE WITH ASME Y14.24M-1989

UNLESS OTHERWISE SPECIFIED DIMENSIONS ARE IN INCHES

DECIMAL TOLERANCES
.X ±.030
.XX ±.015
.XXX ±.005
ANGULAR TOLERANCE
± .5°

NA FINISH

BREAK SHARP EDGES
MAX. XX MIN. XX

OUTSTANDING ECN

Q.A. CATEGORY A-3

		DATE
DRAWN BY	N.S.	07/22/99
CHECKED BY		
DESIGN APPROVAL		
ENGINEER APPROVAL		
SUPVR. APPROVAL		

NEXT ASSEMBLY

BROOKHAVEN NATIONAL LABORATORY
ASSOCIATED UNIVERSITIES, INC.
UPTON, N.Y. 11973

WESTINGHOUSE CONTROL ROOM

ASSEMBLY

SIZE D | DRAWING NUMBER | REV. A

MATERIAL: ——— | SCALE: N.A. | WEIGHT: – | SHEET 1 OF 7

*AUTOCAD

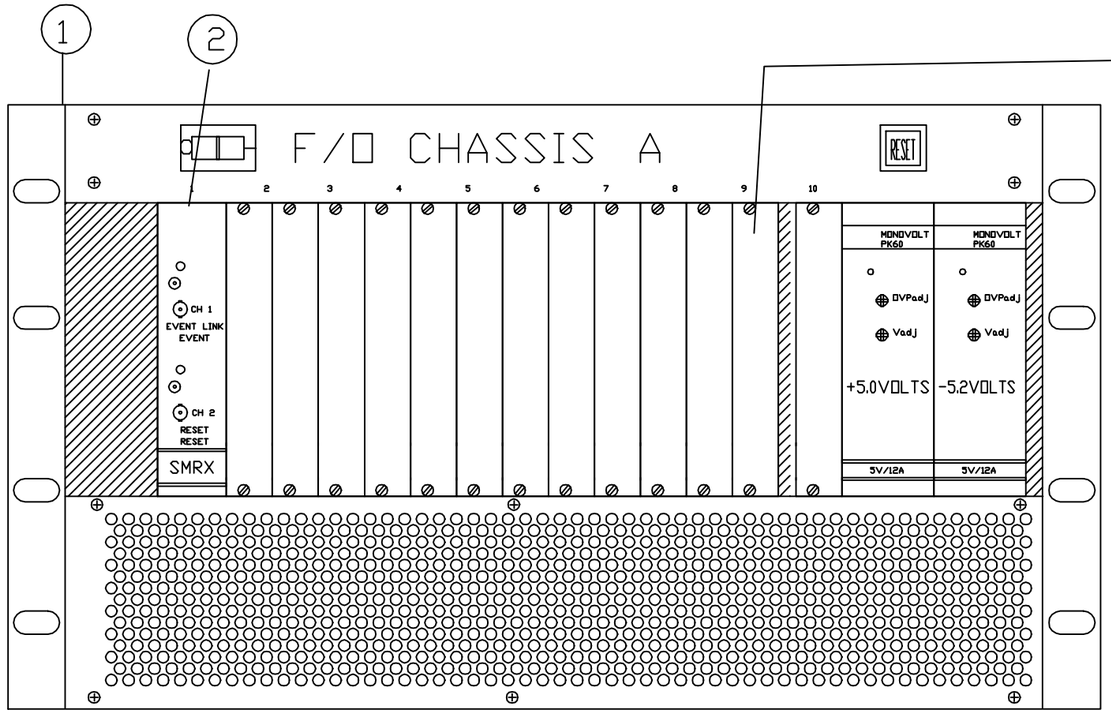

FRONT VIEW

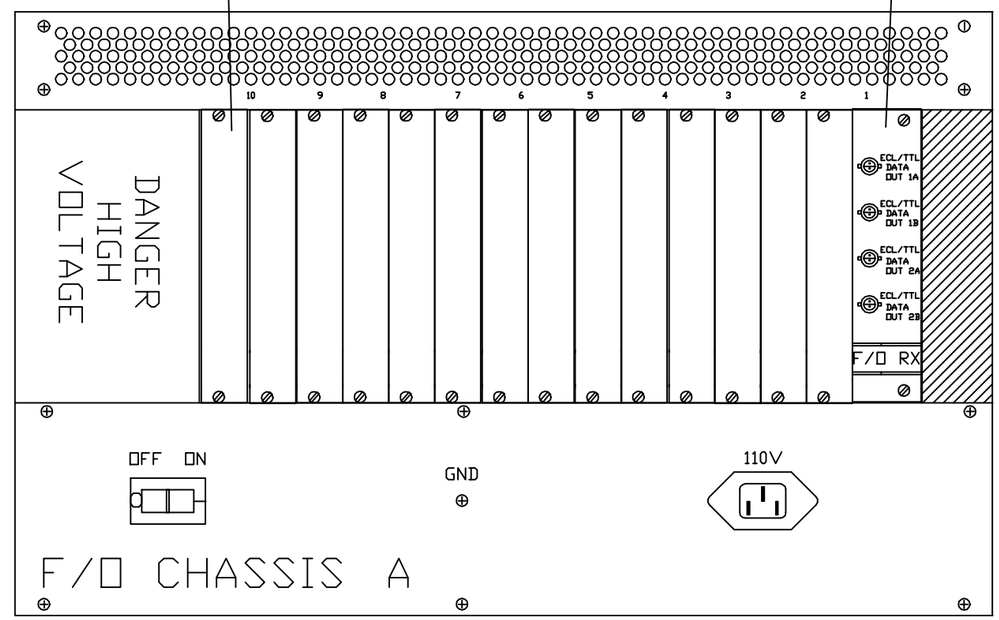

REAR VIEW

QTY REQD -3	QTY REQD -2	QTY REQD -1	REF DESIGNATOR	ITEM NO.	DESCRIPTION	MAT'L DWG NO.,BNL NO.
		27	4	4	BLANK PANELS 3U	X
		1	3	3	F/O RECIEVER TRANSITION MODULE	D09-E-2542
		1	2	2	F/O RECIEVER	94028099
		1	1	1	F/O CHASSIS	ACS 94/3

INTERPRET IN GENERAL ACCORDANCE WITH ASME Y14.24M-1989

UNLESS OTHERWISE SPECIFIED DIMENSIONS ARE IN INCHES

DECIMAL TOLERANCES
.X ±.030
.XX ±.015
.XXX ±.005
ANGULAR TOLERANCE
± .5°

OUTSTANDING ECN

NA FINISH

BREAK SHARP EDGES
MAX. XX MIN. XX

Q.A. CATEGORY A-3

		DATE
DRAWN BY	N.S.	07/22/99
CHECKED BY		
DESIGN APPROVAL		
ENGINEER APPROVAL		
SUPVR. APPROVAL		

NEXT ASSEMBLY

BROOKHAVEN NATIONAL LABORATORY
ASSOCIATED UNIVERSITIES, INC.
UPTON, N.Y. 11973

WESTINGHOUSE CONTROL ROOM

F/O CHASSIS

ASSEMBLY

SIZE D | Drawing Number | REV. A

DRAWING NUMBER

MATERIAL: ——— SCALE: N.A. WEIGHT: – SHEET 2 OF 7

*AUTOCAD

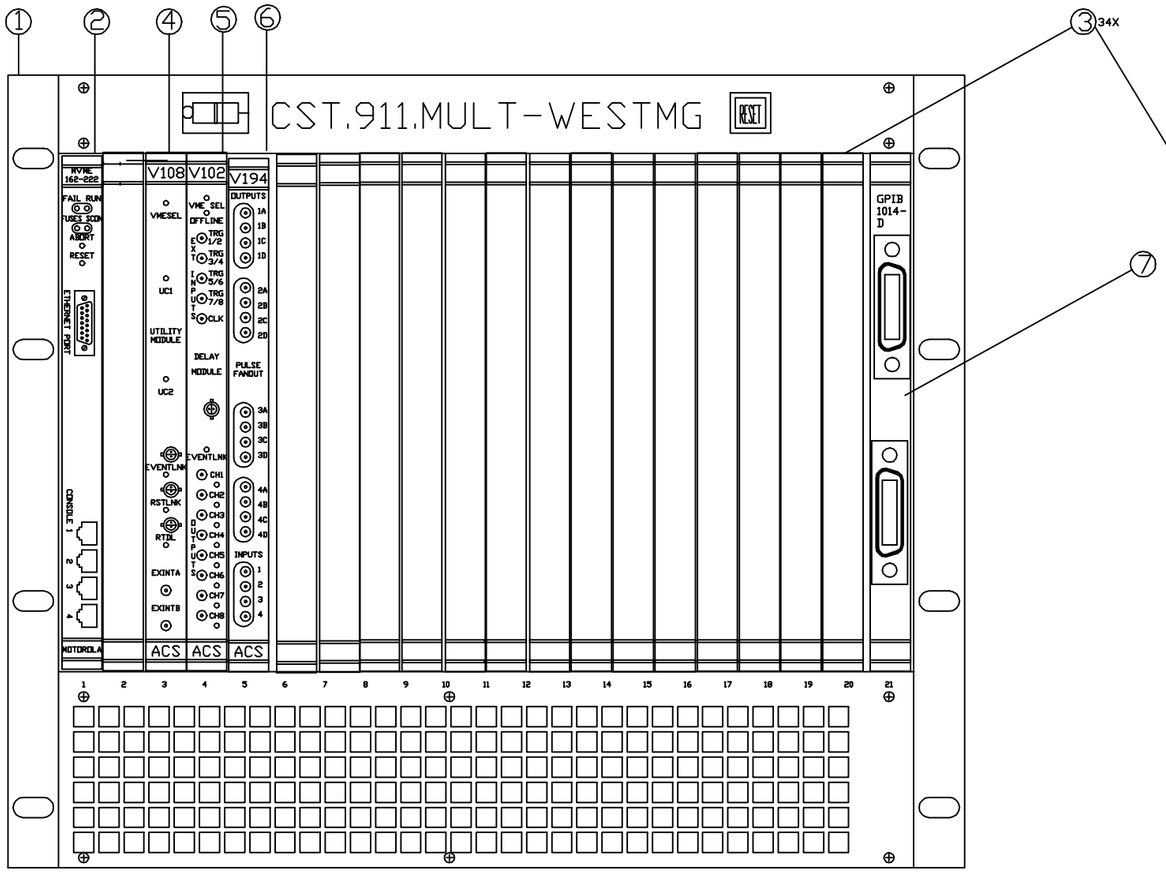

FRONT VIEW

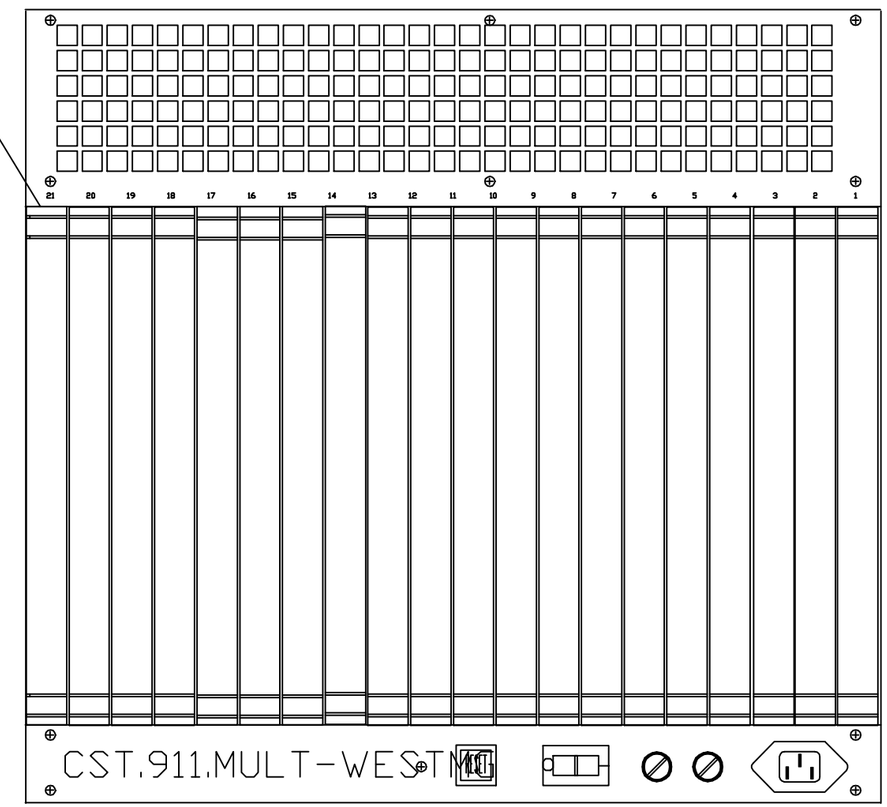

REAR VIEW

QTY REQD -3	QTY REQD -2	QTY REQD -1	REF DESIGNATOR	ITEM NO.	DESCRIPTION	MAT'L DWG NO./BNL NO.
		1	7	7	NATIONAL INST. GPIB 1014-D	
		1	6	6	v194	94028194-1
		3	5	5	V102	94028070
		1	4	4	V108	94028092
		37	3	3	6U BLANK PANELS	X
		1	2	2	MOTOROLA CPU BD.	MVME162-222
		1	1	1	VME CHASSIS 6U	93008000

INTERPRET IN GENERAL ACCORDANCE WITH ASME Y14.24M-1989

UNLESS OTHERWISE SPECIFIED DIMENSIONS ARE IN INCHES

DECIMAL TOLERANCES
.X ±.030
.XX ±.015
.XXX ±.005
ANGULAR TOLERANCE
± .5°

OUTSTANDING ECN

NA FINISH

BREAK SHARP EDGES
MAX. XX MIN. XX

Q.A. CATEGORY A-3

DATE

DRAWN BY N.S. 07/22/99

CHECKED BY

DESIGN APPROVAL

ENGINEER APPROVAL

SUPVR. APPROVAL

NEXT ASSEMBLY

BROOKHAVEN NATIONAL LABORATORY
ASSOCIATED UNIVERSITIES, INC.
UPTON, N.Y. 11973

WESTINGHOUSE CONTROL ROOM

VME CHASSIS

ASSEMBLY

SIZE D

Drawing Number

DRAWING NUMBER

REV. A

MATERIAL: ——— SCALE: N.A. WEIGHT: – SHEET 3 OF 7

*AUTOCAD

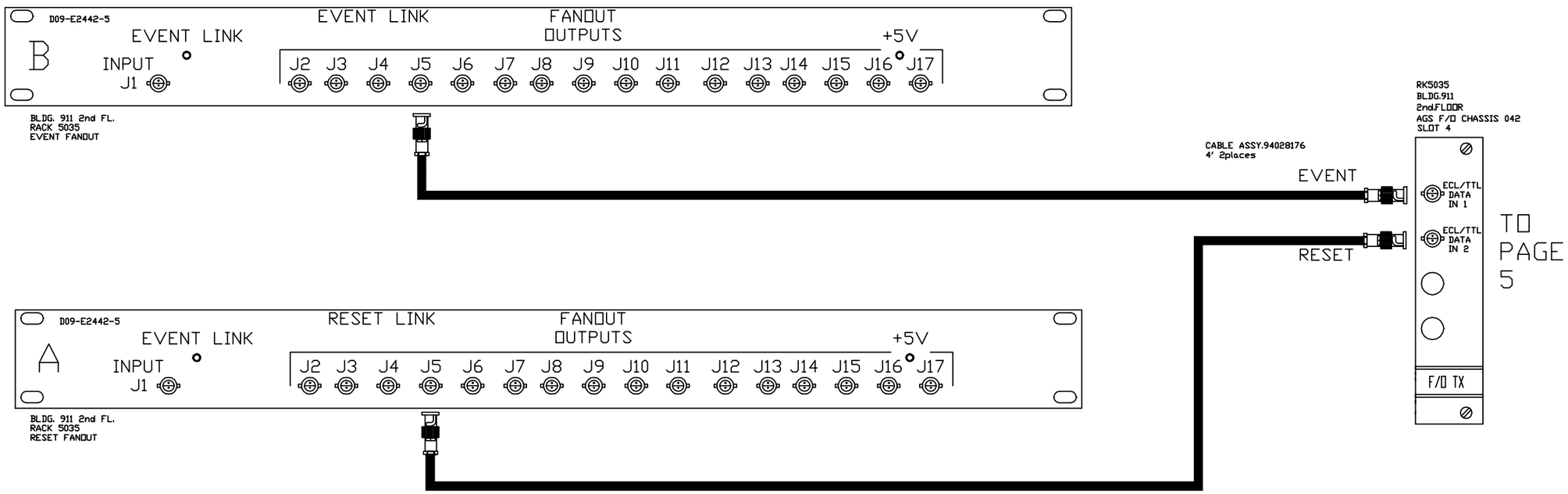

-3	-2	-1	REF DESIGNATOR	ITEM NO.	DESCRIPTION	MAT'L. DWG NO.,BNL NO.
QTY REQD						

INTERPRET IN GENERAL ACCORDANCE WITH ASME Y14.24M-1989

UNLESS OTHERWISE SPECIFIED DIMENSIONS ARE IN INCHES

DECIMAL TOLERANCES
.X ±.030
.XX ±.015
.XXX ±.005
ANGULAR TOLERANCE ± .5°

OUTSTANDING ECN

NA FINISH

BREAK SHARP EDGES MAX. XX MIN. XX

Q.A. CATEGORY A-3

		DATE
DRAWN BY	N.S.	07/22/99
CHECKED BY		
DESIGN APPROVAL		
ENGINEER APPROVAL		
SUPVR. APPROVAL		

NEXT ASSEMBLY

BROOKHAVEN NATIONAL LABORATORY
ASSOCIATED UNIVERSITIES, INC.
UPTON, N.Y. 11973

WESTINGHOUSE CONTROL ROOM

TIMING AND COMMUNICATION CABLING

DIAGRAMS

SIZE D | Drawing Number | REV. A

DRAWING NUMBER

MATERIAL: ——— SCALE: N.A. WEIGHT: – SHEET 4 OF 7

*AUTOCAD

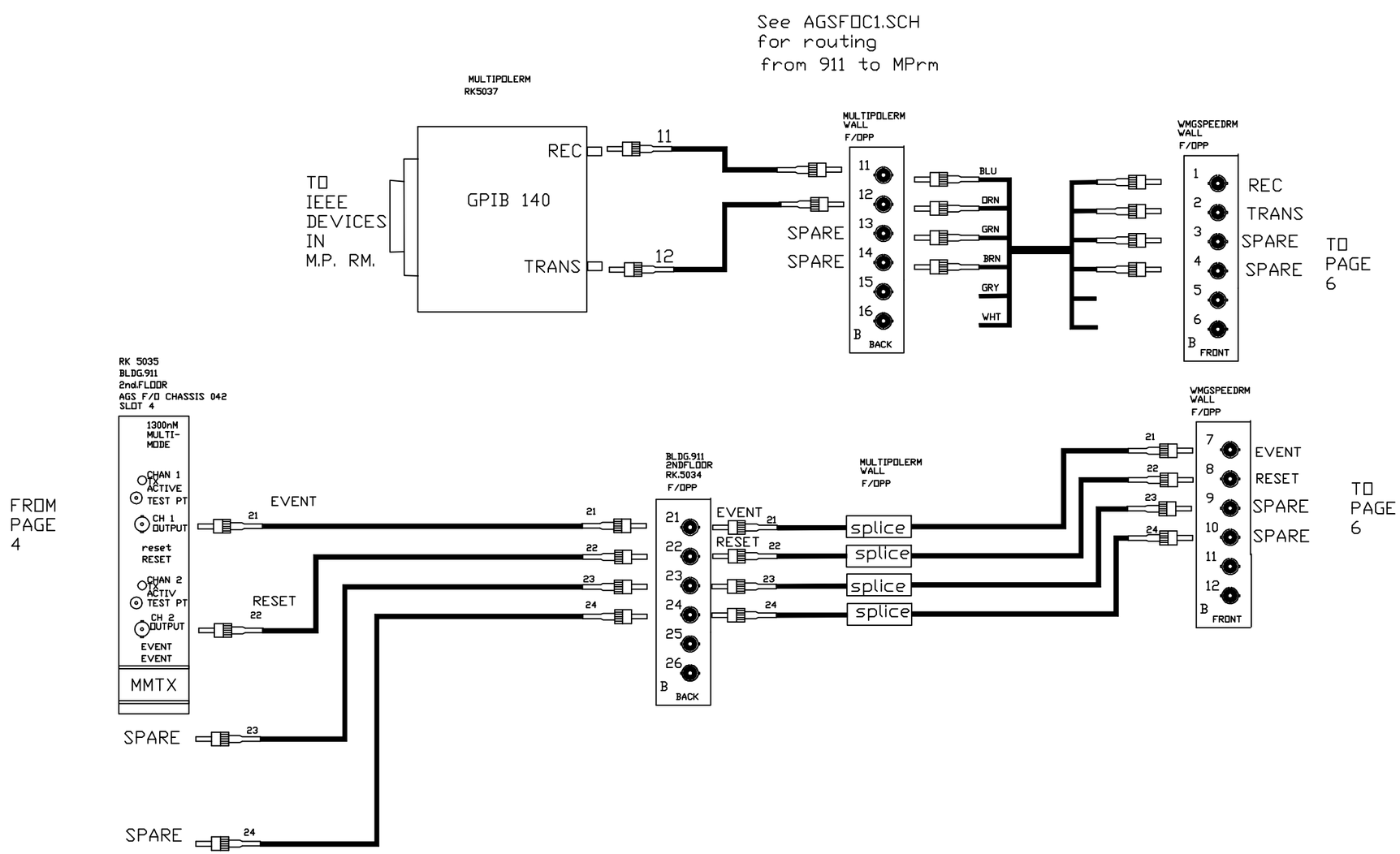

QTY REQD -3	QTY REQD -2	QTY REQD -1	REF DESIGNATOR	ITEM NO.	DESCRIPTION	MAT'L DWG NO.,SHL NO.

INTERPRET IN GENERAL ACCORDANCE WITH ASME Y14.24M-1989

UNLESS OTHERWISE SPECIFIED DIMENSIONS ARE IN INCHES

DECIMAL TOLERANCES
.X ±.030
.XX ±.015
.XXX ±.005
ANGULAR TOLERANCE
± .5°

NA FINISH

BREAK SHARP EDGES
MAX. XX MIN. XX

OUTSTANDING ECN

Q.A. CATEGORY A-3

		DATE
DRAWN BY	N.S.	07/22/99
CHECKED BY		
DESIGN APPROVAL		
ENGINEER APPROVAL		
SUPVR. APPROVAL		

NEXT ASSEMBLY

BROOKHAVEN NATIONAL LABORATORY
ASSOCIATED UNIVERSITIES, INC.
UPTON, N.Y. 11973

WESTINGHOUSE CONTROL ROOM

TIMING AND COMMUNICATION CABLING

DIAGRAMS

SIZE D | Drawing Number | REV. A

DRAWING NUMBER

MATERIAL: ——— SCALE: N.A. WEIGHT: – SHEET 5 OF 7

*AUTOCAD

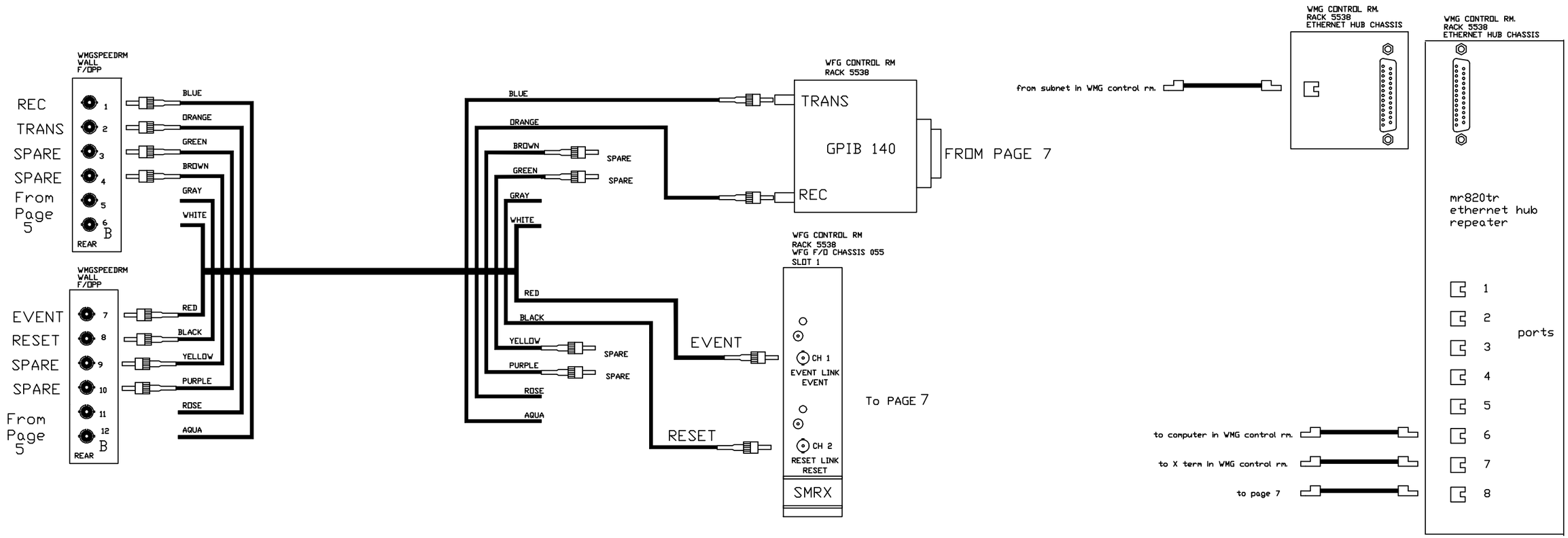

-3	-2	-1	REF DESIGNATOR	ITEM NO.	DESCRIPTION	MAT'L DWG NO.,BNL NO.
QTY REQD						

INTERPRET IN GENERAL ACCORDANCE WITH ASME Y14.24M-1989

UNLESS OTHERWISE SPECIFIED DIMENSIONS ARE IN INCHES

DECIMAL TOLERANCES
.X ±.030
.XX ±.015
.XXX ±.005
ANGULAR TOLERANCE
± .5°

NA FINISH — BREAK SHARP EDGES — MAX. XX MIN. XX

OUTSTANDING ECN

Q.A. CATEGORY A-3		DATE
DRAWN BY	N.S.	07/22/99
CHECKED BY		
DESIGN APPROVAL		
ENGINEER APPROVAL		
SUPVR. APPROVAL		

NEXT ASSEMBLY

BROOKHAVEN NATIONAL LABORATORY
ASSOCIATED UNIVERSITIES, INC.
UPTON, N.Y. 11973

WESTINGHOUSE CONTROL ROOM

TIMING AND COMMUNICATION CABLING

DIAGRAMS

SIZE D — Drawing Number (DRAWING NUMBER) — REV. A

MATERIAL: ——— SCALE: N.A. WEIGHT: – SHEET 6 OF 7

*AUTOCAD

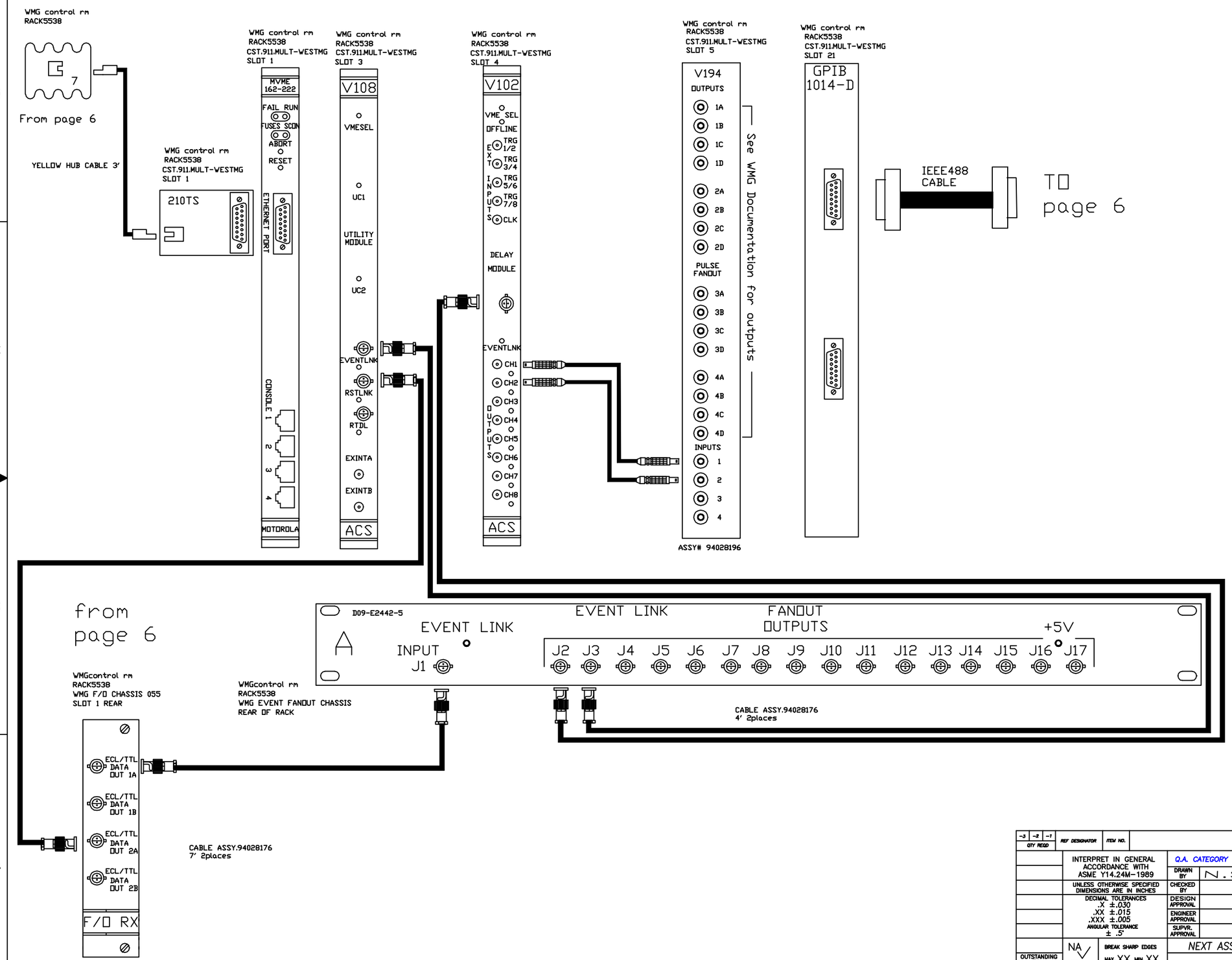

REV.	ZONE	ECN NO.	DATE	BY	CKR	APP.

-3	-2	-1	REF DESIGNATOR	ITEM NO.	DESCRIPTION	MAT'L DWG NO./BNL NO.
QTY REQD						

INTERPRET IN GENERAL ACCORDANCE WITH ASME Y14.24M-1989

UNLESS OTHERWISE SPECIFIED DIMENSIONS ARE IN INCHES

DECIMAL TOLERANCES
.X ±.030
.XX ±.015
.XXX ±.005
ANGULAR TOLERANCE
± .5°

OUTSTANDING ECN

NA FINISH

BREAK SHARP EDGES
MAX. XX MIN. XX

Q.A. CATEGORY A-3

		DATE
DRAWN BY	N.S.	07/12/99
CHECKED BY		
DESIGN APPROVAL		
ENGINEER APPROVAL		
SUPVR. APPROVAL		

NEXT ASSEMBLY

BROOKHAVEN NATIONAL LABORATORY
ASSOCIATED UNIVERSITIES, INC.
UPTON, N.Y. 11973

WESTINGHOUSE CONTROL ROOM

TIMING AND COMMUNICATION CABLING

DIAGRAMS

SIZE D

Drawing Number

DRAWING NUMBER

REV. A

MATERIAL: ——— SCALE: N.A. WEIGHT: – SHEET 7 OF 7

*AUTOCAD