907 HITL1

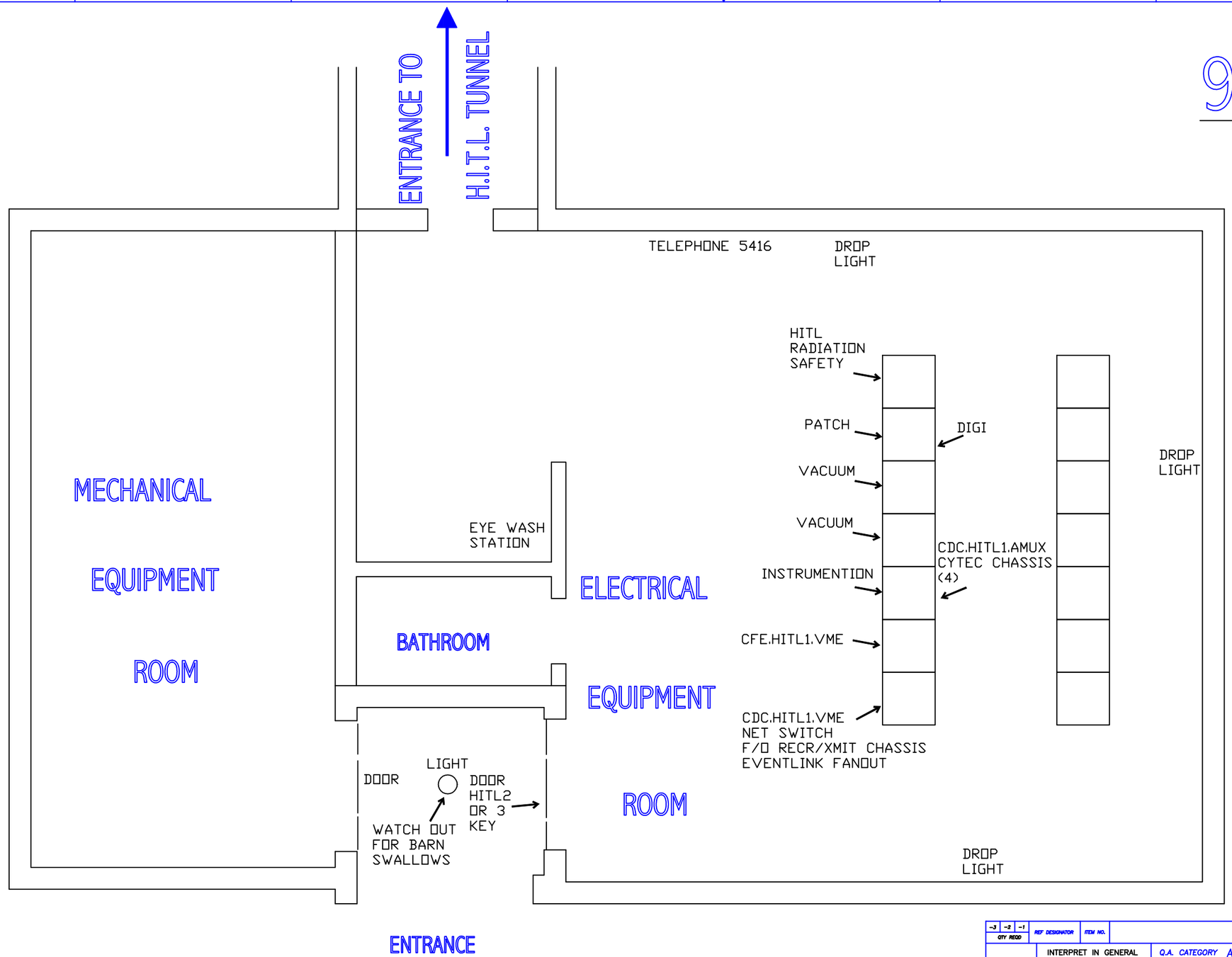

REV.	ZONE	ECN NO.	DATE	BY	CKR	APP.

-3	-2	-1	REF DESIGNATOR	ITEM NO.	DESCRIPTION	MAT'L DWG NO./JRNL NO.
QTY REQD						

INTERPRET IN GENERAL ACCORDANCE WITH ASME Y14.24M-1989

UNLESS OTHERWISE SPECIFIED DIMENSIONS ARE IN INCHES

DECIMAL TOLERANCES
.X ±.030
.XX ±.015
.XXX ±.005
ANGULAR TOLERANCE ± .5°

OUTSTANDING ECN

NA FINISH

BREAK SHARP EDGES MAX. XX MIN. XX

Q.A. CATEGORY A-3		DATE
DRAWN BY	Warren Jappe	08/06/01
CHECKED BY		
DESIGN APPROVAL		
ENGINEER APPROVAL		
SUPVR. APPROVAL		

NEXT ASSEMBLY

BROOKHAVEN NATIONAL LABORATORY
UPTON, N.Y. 11973

CAD division drawings

Map of 907 HITL1

SIZE D | DRAWING NUMBER | REV. A

MATERIAL: ——— | SCALE: FULL | WEIGHT: – | SHEET

*AUTOCAD