controls group, CAD 10/1/2004 10:46 AM multipole_block_F20_G20.dwg

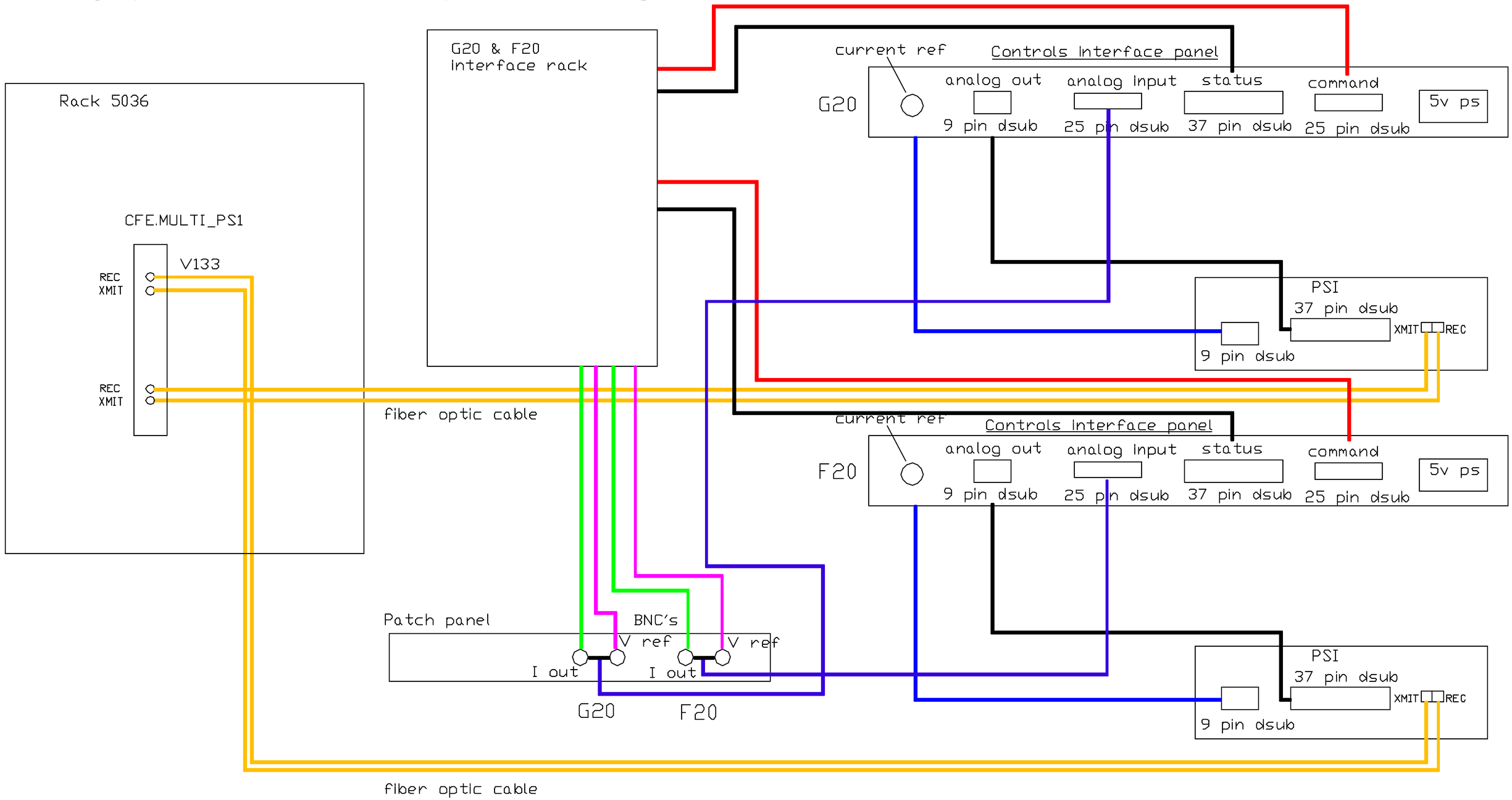

MULTIPOLE POWER SUPPLY
F20 & G20 BUMP

INTERPRET IN GENERAL ACCORDANCE WITH ASME Y14.24M-1989	Q.A. CATEGORY A-3	DATE	BROOKHAVEN NATIONAL LABORATORY ASSOCIATED UNIVERSITIES, INC. UPTON, N.Y. 11973		
UNLESS OTHERWISE SPECIFIED DIMENSIONS ARE IN INCHES	DRAWN BY Jappe	9/23/04	multipole room, block		
DECIMAL TOLERANCES .X ±.XX .XX ±.XX .XXX ±.XXX ANGULAR TOLERANCE ± XXX	CHECKED BY		F20 & G20		
	DESIGN APPROVAL				
	ENGINEER APPROVAL				
	SUPVR. APPROVAL				
NA FINISH	BREAK SHARP EDGES MAX. XX MIN. XX	NEXT ASSEMBLY	SIZE A	DRAWING NUMBER	REV. A
OUTSTANDING ECN			MATERIAL:	SCALE: NA	WEIGHT: - SHEET

*AUTOCAD