CONTROLS- 2/5/04 3:39 PM 930UEB_inj_ext_eurocard_chassisE.dwg

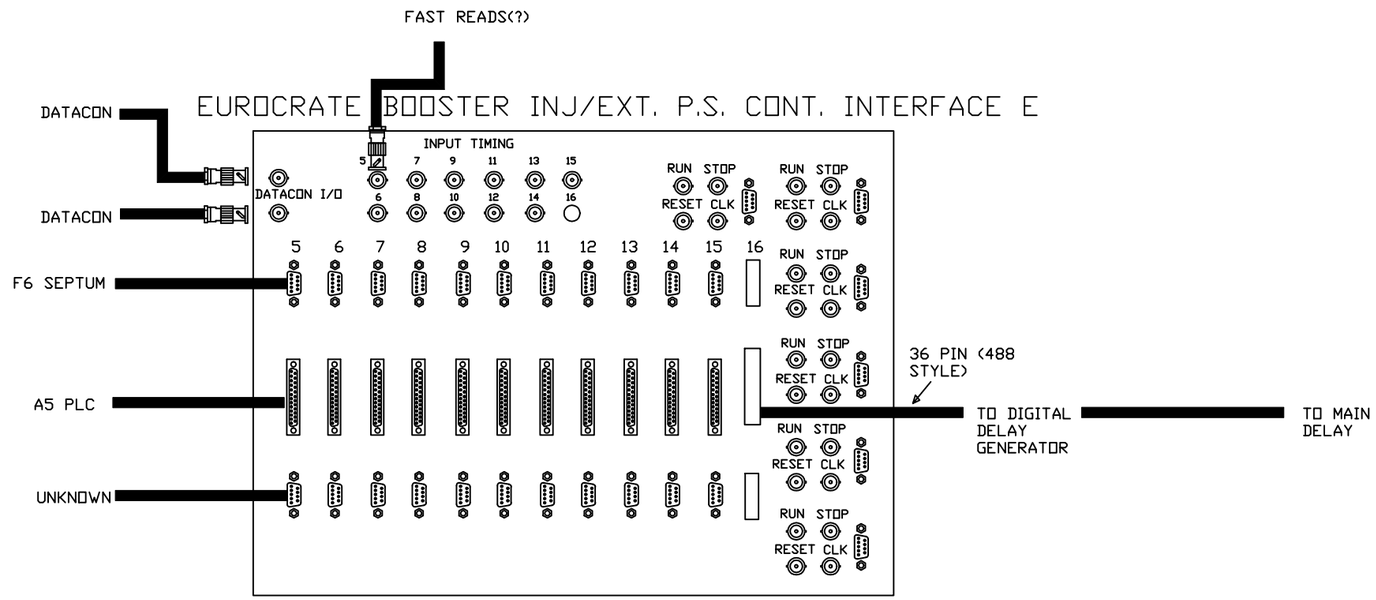

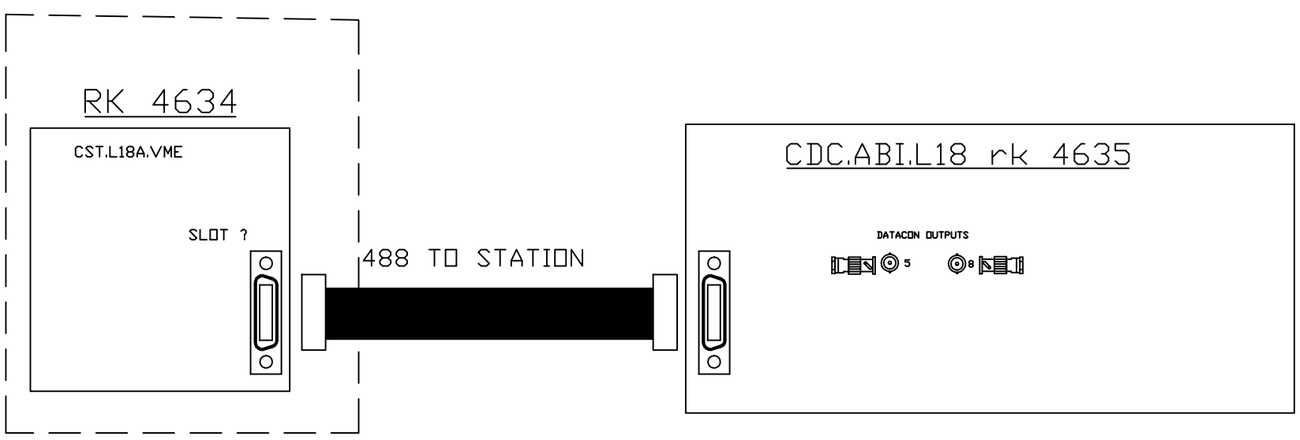

REV.	ZONE	ECN NO.	DATE	BY	CKR	APP.

-3	-2	-1	QTY REQD	REF DESIGNATOR	ITEM NO.	DESCRIPTION	MAT'L DWG NO./BNL NO.

INTERPRET IN GENERAL ACCORDANCE WITH ASME Y14.24M-1989

UNLESS OTHERWISE SPECIFIED DIMENSIONS ARE IN INCHES

DECIMAL TOLERANCES
.X ±XXX
.XX ±XXX
.XXX ±XXX
ANGULAR TOLERANCE
± XXX

OUTSTANDING ECN

NA FINISH

BREAK SHARP EDGES
MAX. XX MIN. XX

Q.A. CATEGORY A-3

DRAWN BY Jappe DATE 2/04/2004

CHECKED BY

DESIGN APPROVAL

ENGINEER APPROVAL

SUPVR. APPROVAL

NEXT ASSEMBLY

BROOKHAVEN NATIONAL LABORATORY
ASSOCIATED UNIVERSITIES, INC.
UPTON, N.Y. 11973

CAD WIRING DIAGRAM

L18A INJ/EXT BLOCK DIAGRAM

SIZE A

DRAWING NUMBER

REV. A

MATERIAL: ——— SCALE: NA WEIGHT: – SHEET 3

*AUTOCAD