Tandem Controls Section
TALCOVE Wiring Diagrams
BNL Drawing Number Talcove_hitl

Brookhaven National Laboratory, Upton, New York 11973

Created By: Ralph Schoenfeld
Last Updated 11/9/04

Mechanical Drawings
🕮 R1 Rack Layout (Sheet 1)
🕮 R2 Rack Layout (Sheet 2)
🕮 R3 Rack Layout (Sheet 3)
🕮 R4 Rack Layout (Sheet 4)
🕮 R5 Rack Layout (Sheet 5)
🕮 Fiber Optic Chassis Layout (Sheet 6)
🕮 MP6 Chassis Layout (Sheet 10)
🕮 CST-TALCOVE-VME Chassis Layout (Sheet 13)
🕮 CFE-TALCOVE-VME Chassis Layout (Sheet 14)

Serial Links
🕮 Event Link (Sheet 7)
🕮 Reset Link (Sheet 8)
🕮 INJ RTDL (Sheet 9)
🕮 MP6 Panel Wiring Diagram (Sheet 11)
🕮 Digi 16 Port Server MDS-TALCOVE-TERM1 & 2 (Sheet 12)

VME Chassis CST-TALCOVE-VME modules
🕮 Front End Computer and V108 Utility Module (Sheet 15)
🕮 V102 Delay Module #1 (Sheet 16)
🕮 V102 Delay Module #2 (Sheet 17)
🕮 SIS3803 Scaler Module (Sheet 18)
🕮 VMEX Motor Control Module (Sheet 19)
🕮 GPIB 1014 and GPIB 1014D IEEE 488 Interface Modules (Sheet 20)

VME Chassis CFE-TALCOVE-VME modules
🕮 Front End Computer and V108 Utility Module (Sheet 21)
🕮 V202 & V294 Digital Timing #1 (Sheet 22)
🕮 VMIC 1160A-200D Digital Input Module #3 (Sheet 23)
🕮 VMIC 1160A-200D Digital Input Module #4 (Sheet 24)
🕮 VMIC 1160A-403D Digital Input Module #5 (Sheet 25)
🕮 VMIC 2170A-210D Digital Output Module #2 (Sheet 26)
🕮 VMIC 3122-012 Analog Input Module #1 (Sheet 27)
🕮 V202 & V294 Digital Timing #2 (Sheet 28)
🕮 VMIC 1160A-200D Digital Input Module #1 (Sheet 29)
🕮 VMIC 1160A-403D Digital Input Module #2 (Sheet 30)
🕮 VMIC 2170A-210D Digital Output Module #1 (Sheet 31)
🕮 VMIC 3122-012 Analog Input Module #2 (Sheet 32)

High Ion Transfer Line Controls Section
HITL Houses Wiring Diagrams
BNL Drawing Number Talcove_hitl

Brookhaven National Laboratory, Upton, New York 11973

Created By: Ralph Schoenfeld
Last Updated 11/9/04

Mechanical Drawings
- 🕮 HITL1 Controls Rack Layout (Sheet 33)
- 🕮 HTIL1 Instrumentation Rack Layout (Sheet 34)
- 🕮 HTIL1 Vacuum Rack Layout (Sheet 35)
- 🕮 HTIL1 Fiber Optic Chassis Layout (Sheet 36)
- 🕮 HITL2 Controls Rack Layout (Sheet 50)
- 🕮 HTIL2 Instrumentation Rack Layout (Sheet 51)
- 🕮 HTIL2 Vacuum Rack Layout (Sheet 52)
- 🕮 HTIL2 Fiber Optic Chassis Layout (Sheet 53)
- 🕮 HITL3 Controls Rack Layout (Sheet 73)
- 🕮 HTIL3 Instrumentation Rack Layout (Sheet 74)
- 🕮 HTIL3 Vacuum Rack Layout (Sheet 75)
- 🕮 HTIL3 Fiber Optic Chassis Layout (Sheet 76)
- 🕮 CST-HITL1-VME Chassis Layout (Sheet 38)
- 🕮 CFE-HITL1-VME Chassis Layout (Sheet 39)
- 🕮 CST-HITL2-VME Chassis Layout (Sheet 57)
- 🕮 CFE-HITL2-VME Chassis Layout (Sheet 58)
- 🕮 CFE-HITL2-POLO1 Chassis Layout (Sheet 59)
- 🕮 CST-HITL3-VME Chassis Layout (Sheet 78)
- 🕮 CFE-HITL3-VME Chassis Layout (Sheet 79)

Serial Links
- 🕮 HITL1 Event / Reset / INJ RTDL Link (Sheet 37)
- 🕮 HITL2 Event Link (Sheet 54)
- 🕮 HITL2 Reset Link (Sheet 55)
- 🕮 HITL2 INJ RTDL (Sheet 56)
- 🕮 HITL3 Event / Reset / INJ RTDL Link (Sheet 77)

VME Chassis CST-HITL1-VME modules
- 🕮 Front End Computer and V108 Utility Module (Sheet 40)
- 🕮 V102 Delay Module (Sheet 41)
- 🕮 GPIB 1014 and GPIB 1014D IEEE 488 Interface Modules (Sheet 42)

VME Chassis CFE-HITL1-VME modules
- 🕮 Front End Computer and V108 Utility Module (Sheet 43)
- 🕮 V202 & V294 Digital Timing (Sheet 44)
- 🕮 VMIC 1160A-200D Digital Input Module #1 (Sheet 45)
- 🕮 VMIC 1160A-200D Digital Input Module #2 (Sheet 46)
- 🕮 VMIC 1160A-403D Digital Input Module #3 (Sheet 47)
- 🕮 VMIC 2170A-210D Digital Output Module (Sheet 48)
- 🕮 VMIC 3122-012 Analog Input Module (Sheet 49)

VME Chassis CST-HITL2-VME modules
- 🕮 Front End Computer and V108 Utility Module (Sheet 60)
- 🕮 V102 Delay Module (Sheet 61)
- 🕮 GPIB 1014 and GPIB 1014D IEEE 488 Interface Modules (Sheet 62)

VME Chassis CFE-HITL2-VME modules
- 🕮 Front End Computer and V108 Utility Module (Sheet 63)
- 🕮 V202 & V294 Digital Timing (Sheet 64)
- 🕮 VMIC 1160A-200D Digital Input Module #1 (Sheet 65)
- 🕮 VMIC 1160A-403D Digital Input Module #2 (Sheet 66)
- 🕮 VMIC 2170A-210D Digital Output Module (Sheet 67)
- 🕮 VMIC 3122-012 Analog Input Module (Sheet 68)

VME Chassis CST-HITL2-POLO1 modules
- 🕮 Front End Computer and V108 Utility Module (Sheet 69)
- 🕮 V202 Delay Module (Sheet 70)
- 🕮 SIS3803 Scaler Module (Sheet 71)
- 🕮 VMEX Motor Control Module (Sheet 72)

VME Chassis CST-HITL3-VME modules
- 🕮 Front End Computer and V108 Utility Module (Sheet 80)
- 🕮 V102 Delay Module (Sheet 81)
- 🕮 GPIB 1014 and GPIB 1014D IEEE 488 Interface Modules (Sheet 82)

VME Chassis CFE-HITL3-VME modules
- 🕮 Front End Computer and V108 Utility Module (Sheet 83)
- 🕮 V202 & V294 Digital Timing (Sheet 84)
- 🕮 VMIC 1160A-200D Digital Input Module #1 (Sheet 85)
- 🕮 VMIC 1160A-200D Digital Input Module #2 (Sheet 86)
- 🕮 VMIC 1160A-403D Digital Input Module #3 (Sheet 87)
- 🕮 VMIC 2170A-210D Digital Output Module (Sheet 88)
- 🕮 VMIC 3122-012 Analog Input Module (Sheet 89)

REV.	ZONE	ECN NO.	DATE	BY	CKR	APP.

Schoenfeld, Controls 11/8/2004 3:26 PM talcove_hitl_1.dwg

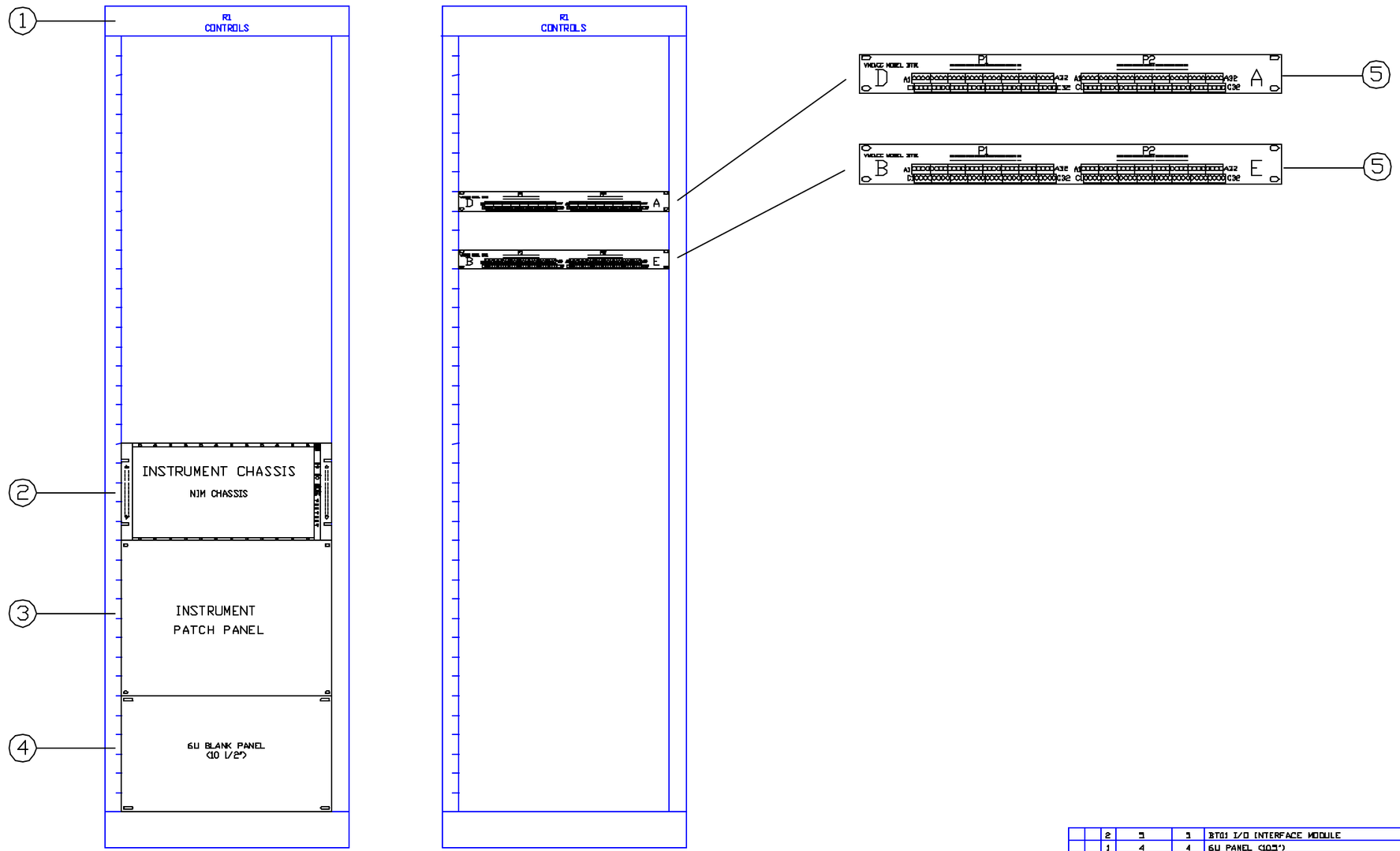

-3	-2	-1	REF DESIGNATOR	ITEM NO.	DESCRIPTION	MAT'L DWG NO./INT. NO.
		2	5	5	BT01 I/O INTERFACE MODULE	
		1	4	4	6U PANEL (10.5")	X
		1	3	3	INSTRUMENT PATCH PANEL	X
		1	2	2	INSTRUMENT CHASSIS	X
		1	1	1	70" RACK	X

QTY REQD

INTERPRET IN GENERAL ACCORDANCE WITH ASME Y14.24M-1989

UNLESS OTHERWISE SPECIFIED DIMENSIONS ARE IN INCHES

DECIMAL TOLERANCES
.X ±.030
.XX ±.015
.XXX ±.005
ANGULAR TOLERANCE ± 1°

OUTSTANDING ECN

NA FINISH

BREAK SHARP EDGES
MAX. XX MIN. XX

Q.A. CATEGORY A-3

		DATE
DRAWN BY	Schoenfeld	11/18/04
CHECKED BY		
DESIGN APPROVAL		
ENGINEER APPROVAL		
SUPVR. APPROVAL		

NEXT ASSEMBLY

BROOKHAVEN NATIONAL LABORATORY
UPTON, N.Y. 11973

CONTROLS WIRING DIAGRAM

BLDG 901A, TALCOVE CFE-TALCOVE-VME

R1 RACK

SIZE D

TALCOVE_HITL_1

DRAWING NUMBER

REV. A

MATERIAL: ——— SCALE: FULL WEIGHT: - SHEET 1

*AUTOCAD

Schoenfeld, Controls 11/8/2004 3:26 PM talcove_hitl_2.dwg

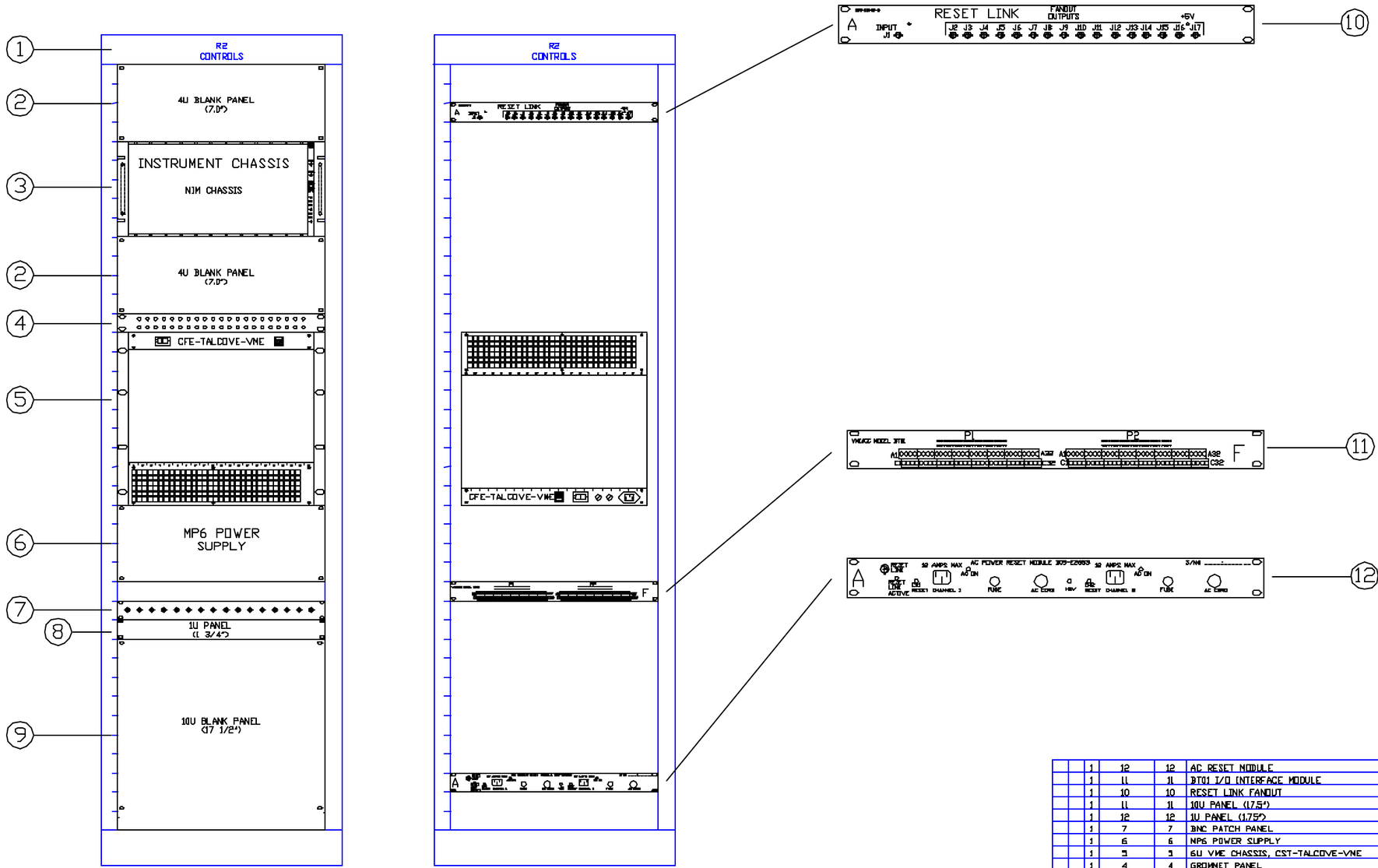

REV.	ZONE	ECN NO.	DATE	BY	CKR	APP.

-3	-2	-1	REF DESIGNATOR	ITEM NO.	DESCRIPTION	MAT'L DWG NO.(NO.)
		1	12	12	AC RESET MODULE	X
		1	11	11	DT01 I/O INTERFACE MODULE	
		1	10	10	RESET LINK FANOUT	DD9-EE442
		1	11	11	10U PANEL (17.5")	A-45521
		1	12	12	1U PANEL (1.75")	A-45501
		1	7	7	BNC PATCH PANEL	X
		1	6	6	MP6 POWER SUPPLY	X
		1	5	5	6U VME CHASSIS, CST-TALCOVE-VME	X
		1	4	4	GROMMET PANEL	X
		1	3	3	INSTRUMENT CHASSIS	X
		2	2	2	4U PANEL (7")	A-45307
		1	1	1	70" RACK	X

INTERPRET IN GENERAL ACCORDANCE WITH ASME Y14.24M-1989	Q.A. CATEGORY A-3	DATE	BROOKHAVEN NATIONAL LABORATORY
	DRAWN BY Schoenfeld	11/18/04	UPTON, N.Y. 11973
UNLESS OTHERWISE SPECIFIED DIMENSIONS ARE IN INCHES	CHECKED BY		CONTROLS WIRING DIAGRAM
DECIMAL TOLERANCES .X ±.030 .XX ±.015 .XXX ±.005 ANGULAR TOLERANCE ± .5°	DESIGN APPROVAL		BLDG 901A, TALCOVE CFE-TALCOVE-VME
	ENGINEER APPROVAL		R2 RACK
	SUPVR. APPROVAL		SIZE D — TALCOVE_HITL_2 — REV. A
OUTSTANDING ECN	NA FINISH	BREAK SHARP EDGES MAX. XX MIN. XX	NEXT ASSEMBLY — DRAWING NUMBER
			MATERIAL: — SCALE: FULL WEIGHT: - SHEET 2

*AUTOCAD

Schoenfeld, Controls 11/8/2004 3:27 PM talcove_hitl_3.dwg

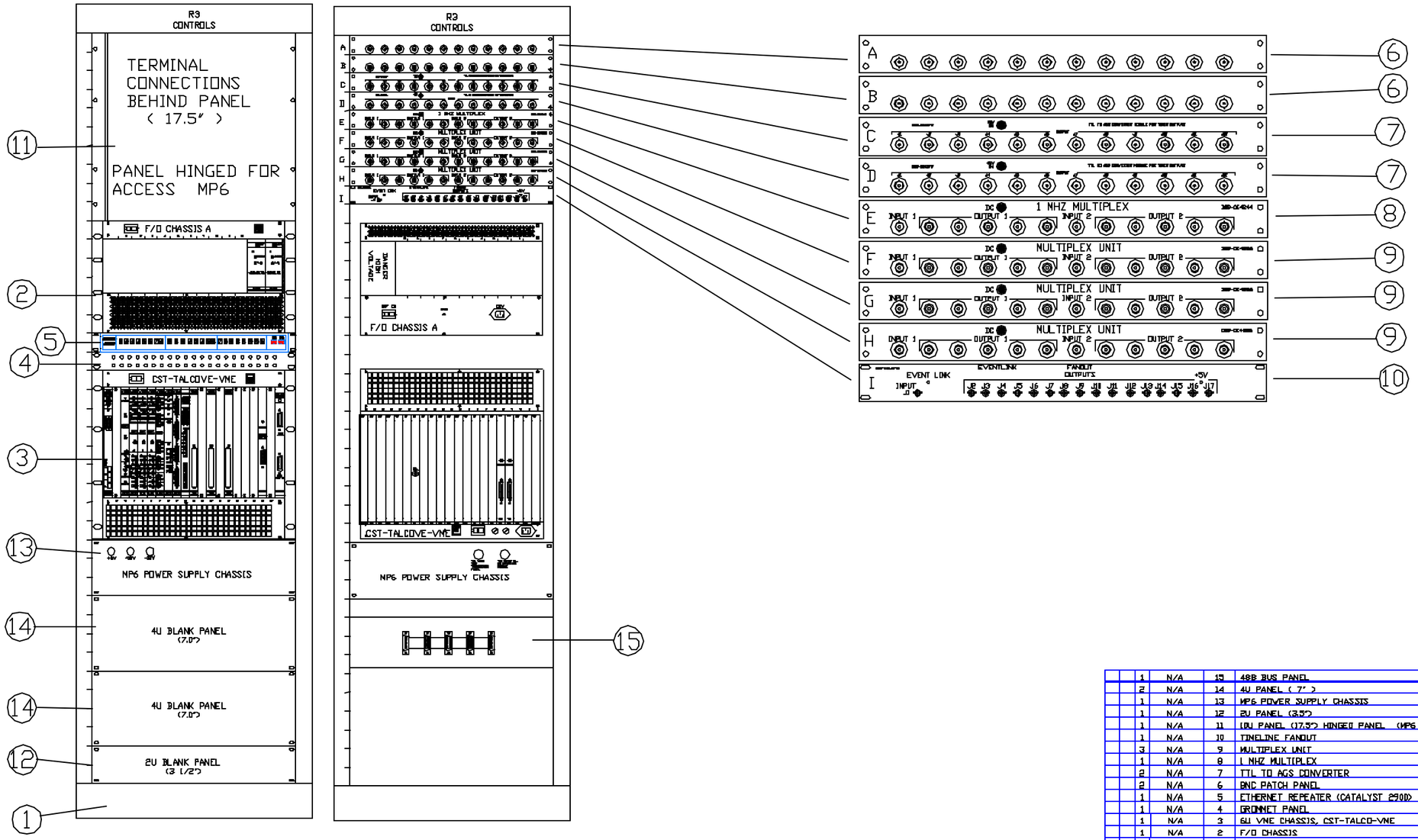

		1	N/A	15	488 BUS PANEL	
		2	N/A	14	4U PANEL (7")	A-45507
		1	N/A	13	MP6 POWER SUPPLY CHASSIS	XXXXXX
		1	N/A	12	2U PANEL (3.5")	A-4XXXXXX
		1	N/A	11	1DU PANEL (17.5") HINGED PANEL (MP6 INTERFACE PANEL)	
		1	N/A	10	TIMELINE FANOUT	D09-E2442
		3	N/A	9	MULTIPLEX UNIT	D09-0E4286
		1	N/A	8	1 MHZ MULTIPLEX	D09-0E4244
		2	N/A	7	TTL TO AGS CONVERTER	N/A
		2	N/A	6	BNC PATCH PANEL	N/A
		1	N/A	5	ETHERNET REPEATER (CATALYST 2900)	N/A
		1	N/A	4	GROMMET PANEL	N/A
		1	N/A	3	6U VME CHASSIS, CST-TALCO-VME	N/A
		1	N/A	2	F/O CHASSIS	N/A
		1	HITL 1	1	19" RACK	N/A
-3	-2	-1	REF DESIGNATION	ITEM NO.	DESCRIPTION	MATL DWG AQUIRE NO.
QTY REQD						

INTERPRET IN GENERAL ACCORDANCE WITH ASME Y14.24M-1989

UNLESS OTHERWISE SPECIFIED DIMENSIONS ARE IN INCHES

DECIMAL TOLERANCES
.X ±.030
.XX ±.015
.XXX ±.005
ANGULAR TOLERANCE
± .5°

NA FINISH

BREAK SHARP EDGES
MAX. XX MIN. XX

OUTSTANDING ECN

Q.A. CATEGORY A-3

		DATE
DRAWN BY	SCHOENFELD	9/02/03
CHECKED BY		
DESIGN APPROVAL		
ENGINEER APPROVAL		
SUPVR. APPROVAL		

NEXT ASSEMBLY

BROOKHAVEN NATIONAL LABORATORY
UPTON, N.Y. 11973

RACK R3 LAYOUT FOR TALCOVE
CONTROL SYSTEM

R3 TALCOVE RACK

SIZE D

TALCOVE_HITL_3

DRAWING NUMBER

REV. A

MATERIAL: ——— SCALE: FULL WEIGHT: - SHEET 3

*AUTOCAD

Schoenfeld, Controls 11/8/2004 3:27 PM talcove_hitl_4.dwg

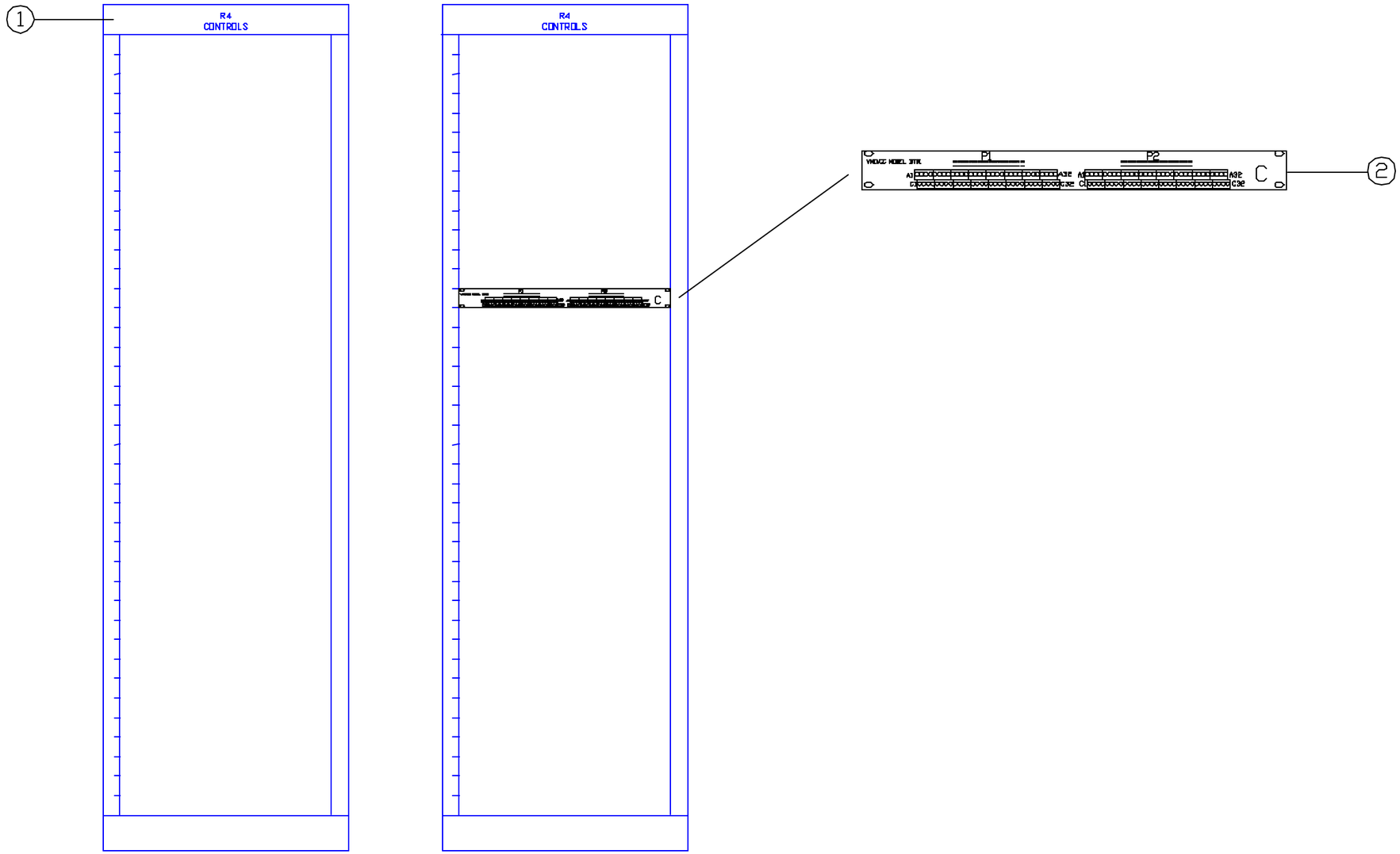

FRONT VIEW

REAR VIEW

QTY REQD -3	QTY REQD -5	QTY REQD -7	REF DESIGNATION	ECN NO.	DESCRIPTION	MAT'L DWG HOLDING NO.
		2	3	3	BT01 I/O INTERFACE MODULE	
		1	1	1	70" RACK	X

INTERPRET IN GENERAL ACCORDANCE WITH ASME Y14.24M-1989

UNLESS OTHERWISE SPECIFIED DIMENSIONS ARE IN INCHES

DECIMAL TOLERANCES
.X ± .030
.XX ± .015
.XXX ± .005
ANGULAR TOLERANCE ± .5°

NA FINISH

BREAK SHARP EDGES MAX. XX MIN. XX

OUTSTANDING ECN

Q.A. CATEGORY A-3

		DATE
DRAWN BY	Schoenfeld	11/18/04
CHECKED BY		
DESIGN APPROVAL		
ENGINEER APPROVAL		
SUPPVR. APPROVAL		

NEXT ASSEMBLY

BROOKHAVEN NATIONAL LABORATORY
UPTON, N.Y. 11973

CONTROLS WIRING DIAGRAM

BLDG 901A, TALCOVE CFE-TALCOVE-VME

R4 RACK

SIZE D — **TALCOVE_HITL_4** — REV. A

DRAWING NUMBER

MATERIAL: ——— SCALE: FULL WEIGHT: - SHEET 4

1 *AUTOCAD

Schoenfeld, Controls 11/8/2004 3:28 PM talcove_hitl_5.dwg

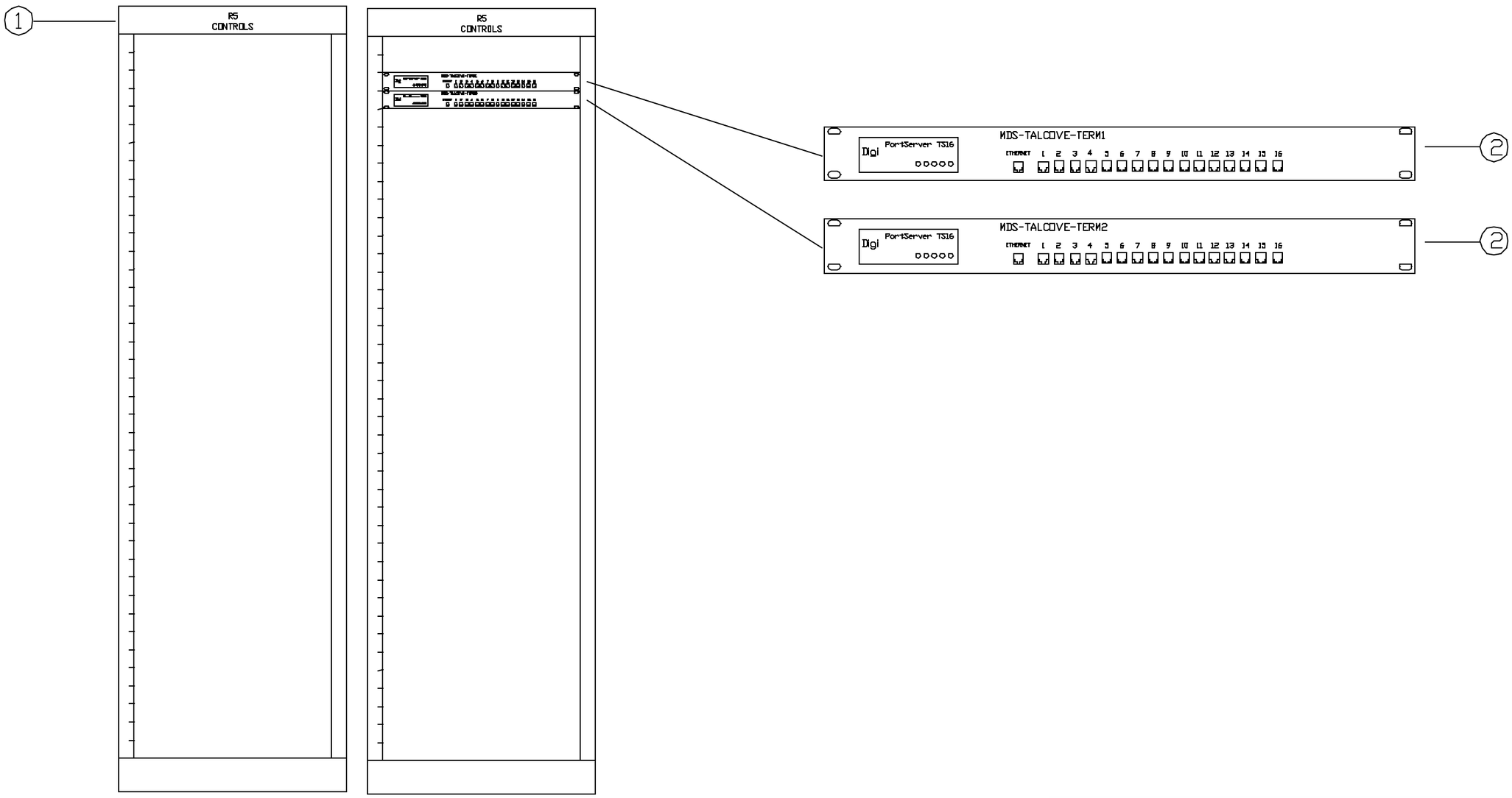

QTY REQD -3	QTY REQD -2	QTY REQD -1	REF DESIGNATOR	ITEM NO.	DESCRIPTION	MAT'L DWG NO./SPEC NO.
		2	N/A	2	16 PORTSEVER DIGI	70001742
		1	1	1	70" RACK	N/A

INTERPRET IN GENERAL ACCORDANCE WITH ASME Y14.24M-1989	Q.A. CATEGORY A-3	DATE	BROOKHAVEN NATIONAL LABORATORY
	DRAWN BY SCHOENFELD	9/12/03	UPTON, N.Y. 11973
UNLESS OTHERWISE SPECIFIED DIMENSIONS ARE IN INCHES	CHECKED BY		RACK R5 LAYOUT FOR TALCOVE
DECIMAL TOLERANCES .X ±.030 .XX ±.015 .XXX ±.005 ANGULAR TOLERANCE ± .5°	DESIGN APPROVAL		CONTROL SYSTEM
	ENGINEER APPROVAL		R5 TALCOVE RACK
	SUPVR. APPROVAL		SIZE D — TALCOVE_HITL_5 — REV. A
NA FINISH	BREAK SHARP EDGES MAX. XX MIN. XX	NEXT ASSEMBLY	DRAWING NUMBER
OUTSTANDING ECN			MATERIAL: ——— SCALE: FULL WEIGHT: – SHEET 5

1 *AUTOCAD

REV.	ZONE	ECN NO.	DATE	BY	CKR	APP.

Schoenfeld, Controls 11/8/2004 3:28 PM talcove_hitl_6.dwg

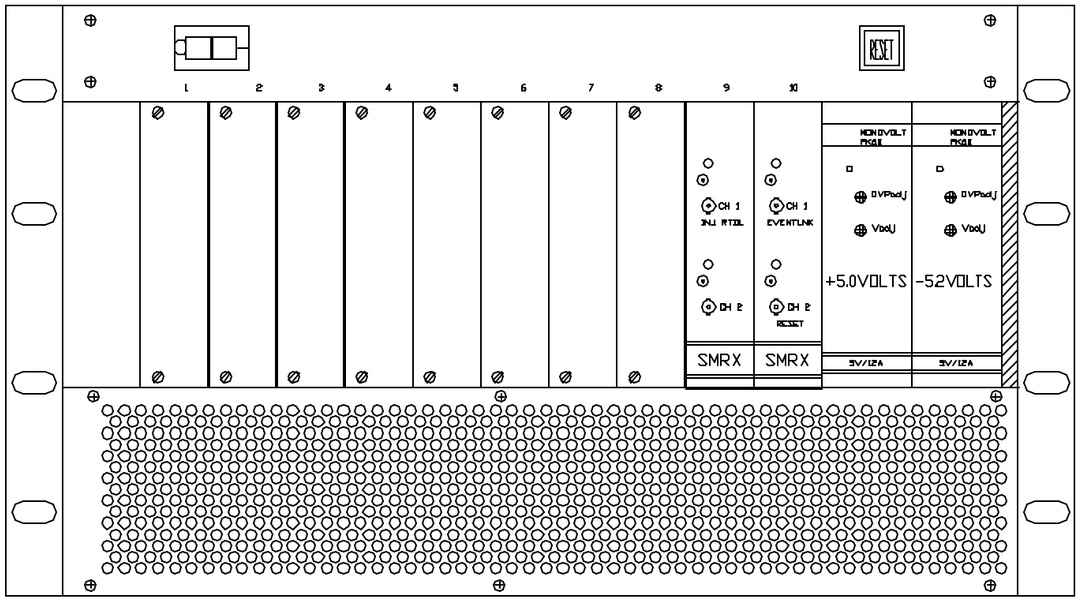

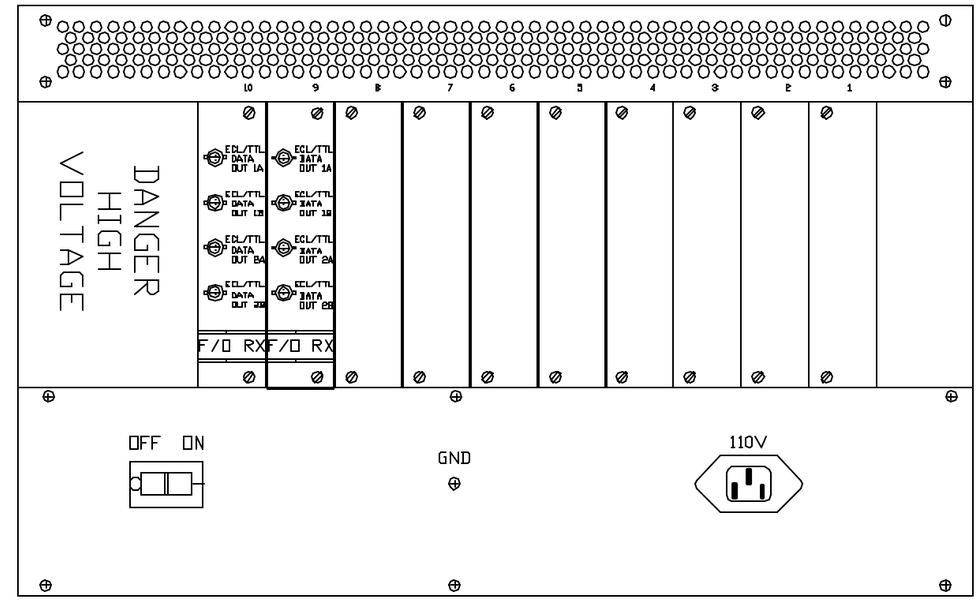

NOTE 1: FILLER PANELS FOR UNUSED SLOTS

QTY REQD -3	QTY REQD -2	QTY REQD -1	REF DESIGNATOR	ITEM NO.	DESCRIPTION	MAT'L DWG NO./INT. NO.
		18	NOTE 1	6	3U X 6HP BLANK PANEL	ESFE-3032
		1	SLOT 12	5	NONOVOLT P.S. -12V	X
		1	SLOT 11	4	NONOVOLT P.S. +5V	X
		2	SLOT 9,10	3	3U FIBER OPTIC TRANSISTION MODULE (TTL)	DO9-E254P
		2	SLOT 9,10	2	3U FIBER OPTIC SINGLE MODE RECIEVER	94028101
		1	N/A	1	3U FIBER OPTIC CHASSIS	94028261

INTERPRET IN GENERAL ACCORDANCE WITH ASME Y14.24M-1989

UNLESS OTHERWISE SPECIFIED DIMENSIONS ARE IN INCHES

DECIMAL TOLERANCES
.X ±.030
.XX ±.015
.XXX ±.005
ANGULAR TOLERANCE ± .5°

NA FINISH

BREAK SHARP EDGES
MAX. XX MIN. XX

OUTSTANDING ECN

Q.A. CATEGORY A-3

		DATE
DRAWN BY	SCHOENFELD	9/02/03
CHECKED BY		
DESIGN APPROVAL		
ENGINEER APPROVAL		
SUPVR. APPROVAL		

NEXT ASSEMBLY

BROOKHAVEN NATIONAL LABORATORY
UPTON, N.Y. 11973

CONTROLS CHASSIS LAYOUT

BLDG 901A, TALCOVE

TANDEM LINE FIBER OPTIC CHASSIS

SIZE D — DRAWING NUMBER TALCOVE_HITL_6 — REV. A

MATERIAL: ——— SCALE: FULL WEIGHT: - SHEET 8

*AUTOCAD

Schoenfeld, Controls 11/8/2004 3:28 PM talcove_hitl_7.dwg

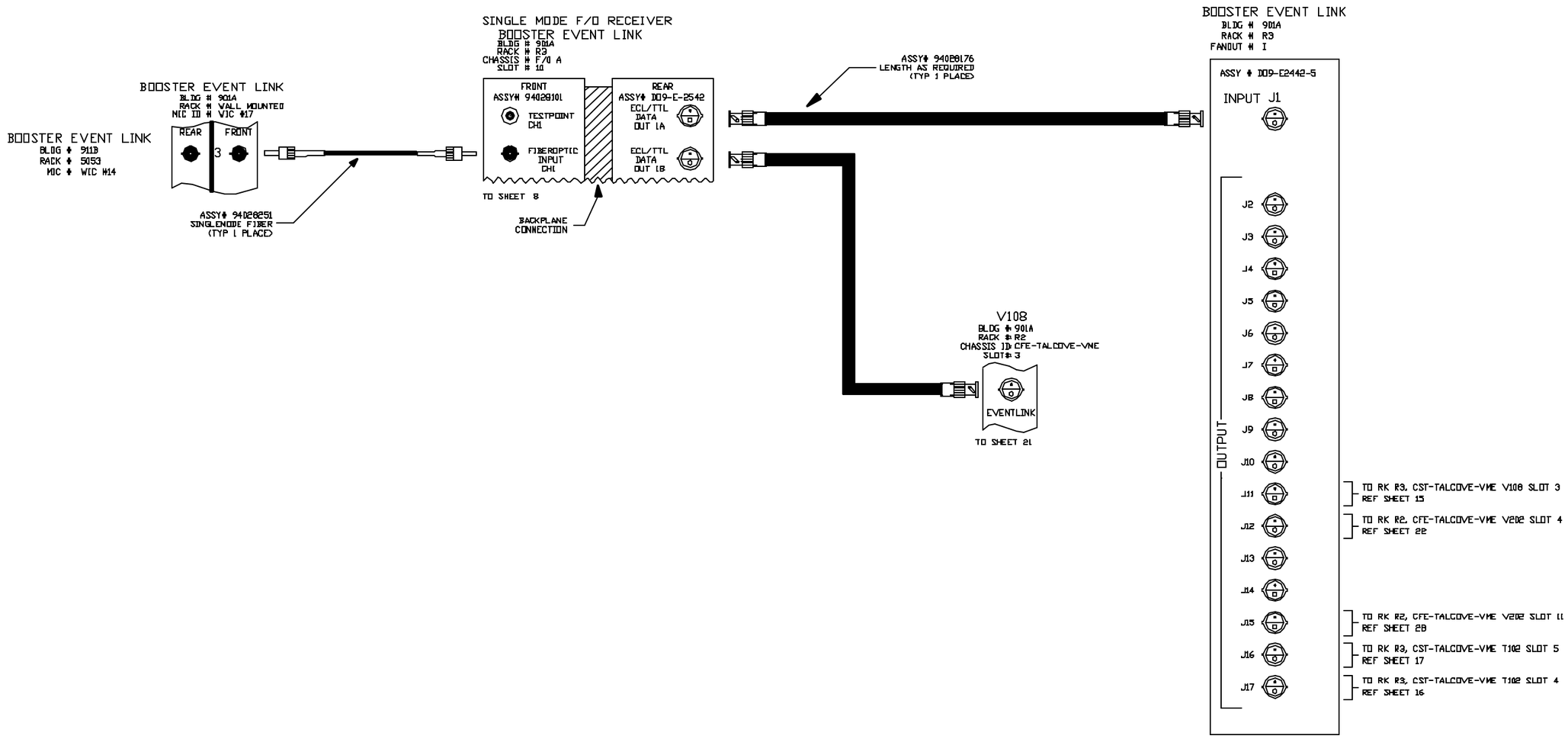

REV.	ZONE	ECN NO.	DATE	BY	CKR	APP.

-3	-2	-1	REF DESIGNATION	ITEM NO.	DESCRIPTION	MFG. PART NO./NAME NO.
QTY REQD						

INTERPRET IN GENERAL ACCORDANCE WITH ASME Y14.24M-1989

UNLESS OTHERWISE SPECIFIED DIMENSIONS ARE IN INCHES

DECIMAL TOLERANCES
.X ± .030
.XX ± .015
.XXX ± .005
ANGULAR TOLERANCE ± .5°

NA FINISH

BREAK SHARP EDGES MAX. XX MIN. XX

OUTSTANDING ECN

Q.A. CATEGORY A-3

		DATE
DRAWN BY	Schoenfeld	9/02/03
CHECKED BY		
DESIGN APPROVAL		
ENGINEER APPROVAL		
SUPVR. APPROVAL		

NEXT ASSEMBLY

BROOKHAVEN NATIONAL LABORATORY
UPTON, N.Y. 11973

CONTROLS WIRING DIAGRAM

BLDG 901A, TALCOVE

BOOSTER EVENT LINK

SIZE D

TALCOVE_HITL_7

DRAWING NUMBER

REV. A

MATERIAL: ——— SCALE: FULL WEIGHT: - SHEET 7

1 *AUTOCAD

Schoenfeld, Controls 11/8/2004 3:29 PM talcove_hltl_8.dwg

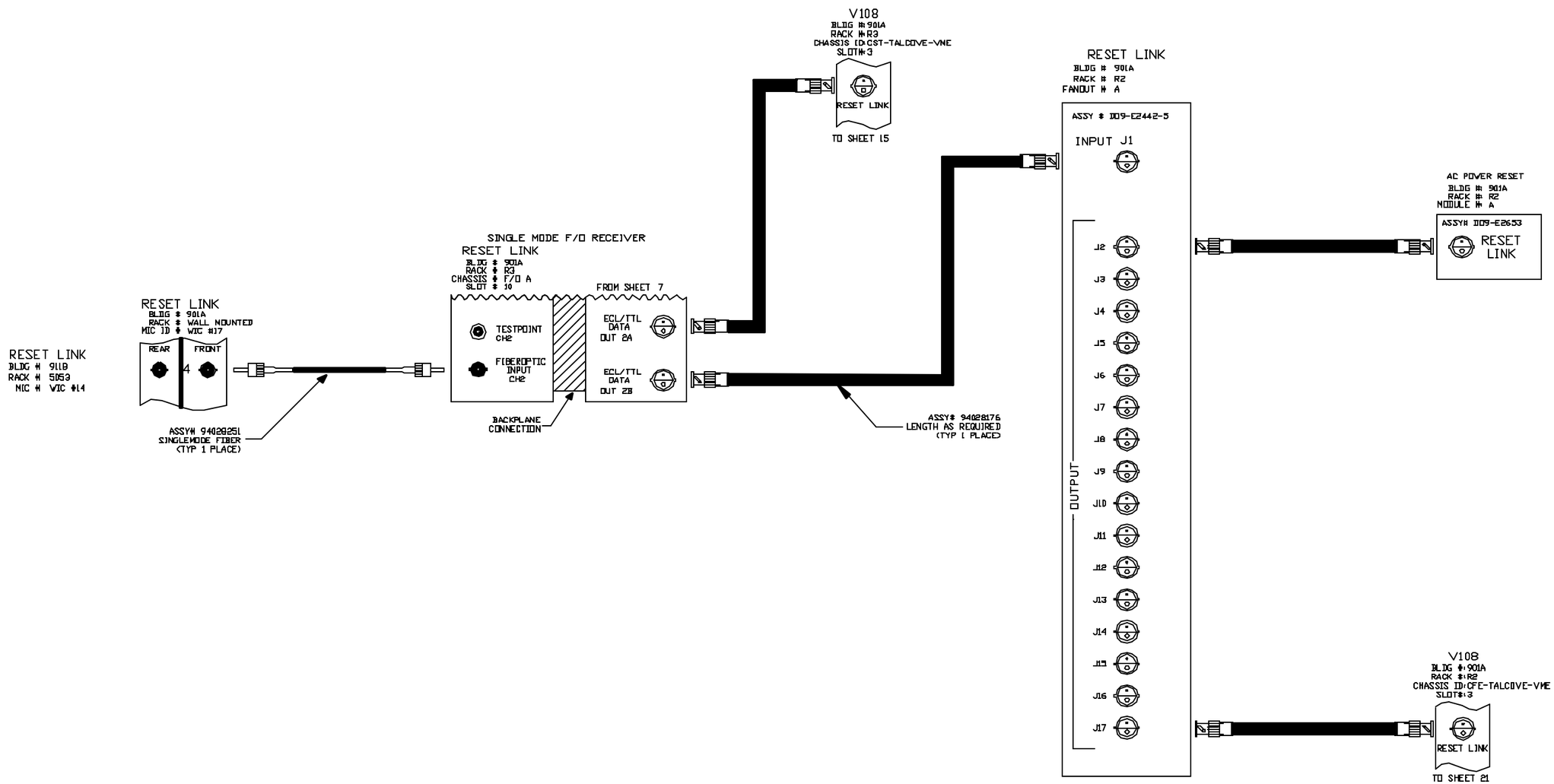

-3	-2	-1	REF DESIGNATION	ECN NO.	DESCRIPTION	MFG. DRG ALUM. NO.
QTY REQD						

INTERPRET IN GENERAL ACCORDANCE WITH ASME Y14.24M-1989

UNLESS OTHERWISE SPECIFIED: DIMENSIONS ARE IN INCHES

DECIMAL TOLERANCES: .X ±.030 .XX ±.015 .XXX ±.005 ANGULAR TOLERANCE ± .5°

NAV FINISH

BREAK SHARP EDGES MAX. XX MIN. XX

OUTSTANDING ECN

Q.A. CATEGORY A-3		DATE
DRAWN BY	Schoenfeld	8/2/03
CHECKED BY		
DESIGN APPROVAL		
ENGINEER APPROVAL		
SUPVR. APPROVAL		

NEXT ASSEMBLY

BROOKHAVEN NATIONAL LABORATORY
UPTON, N.Y. 11973

CONTROLS WIRING DIAGRAM

BLDG 901A, TALCOVE

RESET LINK

SIZE D | TALCOVE_HITL_8 | REV. A

DRAWING NUMBER

MATERIAL: ——— SCALE: FULL WEIGHT: - SHEET 8

*AUTOCAD

Schoenfeld, Controls 11/8/2004 3:29 PM talcove_hltl_9.dwg

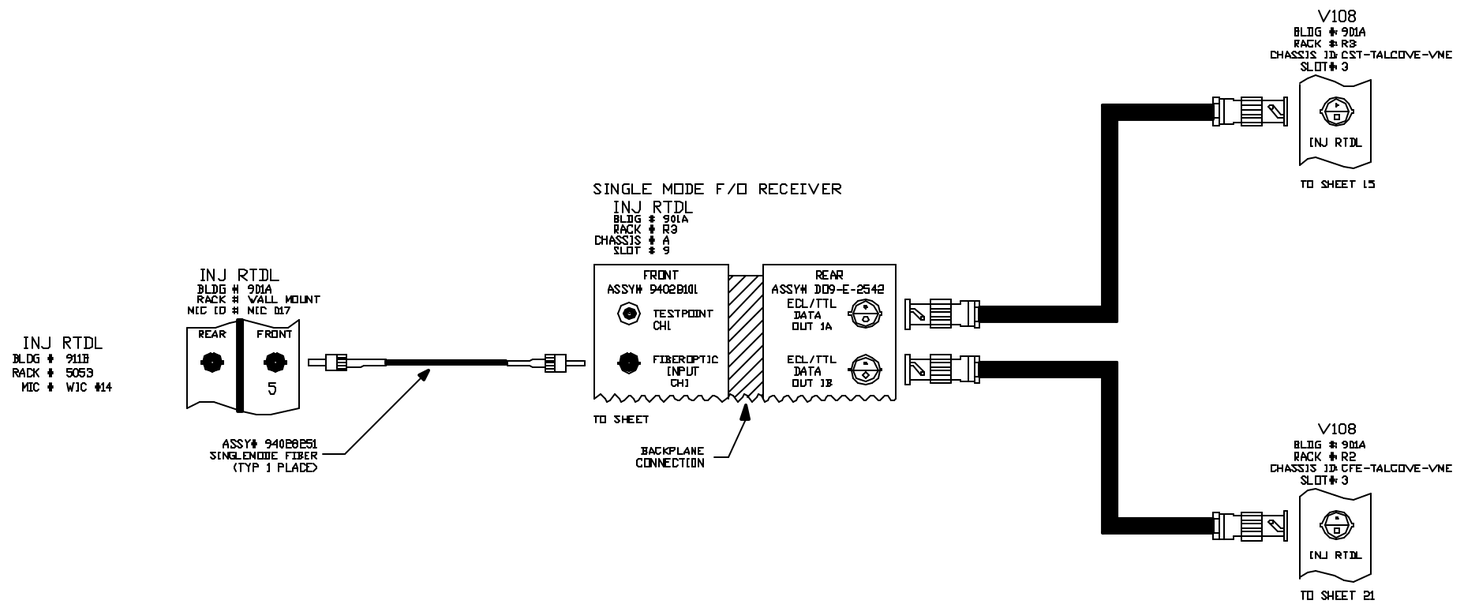

-3	-2	-1	REV DESCRIPTION	ECN NO.	DESCRIPTION	MAT'L DWG NO./ENG. NO.
QTY REQD						

INTERPRET IN GENERAL ACCORDANCE WITH ASME Y14.24M-1989	Q.A. CATEGORY A-3	DATE	BROOKHAVEN NATIONAL LABORATORY
	DRAWN BY SCHOENFELD	9/02/03	UPTON, N.Y. 11973
UNLESS OTHERWISE SPECIFIED DIMENSIONS ARE IN INCHES	CHECKED BY		CONTROLS WIRING DIAGRAM
DECIMAL TOLERANCES .X ±.030 .XX ±.015 .XXX ±.005 ANGULAR TOLERANCE ± .5°	DESIGN APPROVAL		TALCOVE
	ENGINEER APPROVAL		INJ RTDL
	SUPVR. APPROVAL		SIZE D — TALCOVE_HITL_9 — REV. A
NA / FINISH	BREAK SHARP EDGES MAX. XX MIN. XX	NEXT ASSEMBLY	DRAWING NUMBER
OUTSTANDING ECN			MATERIAL: —— SCALE: FULL WEIGHT: - SHEET 9

*AUTOCAD

Schoenfeld, Controls 11/8/2004 3:30 PM talcove_hitl_10.dwg

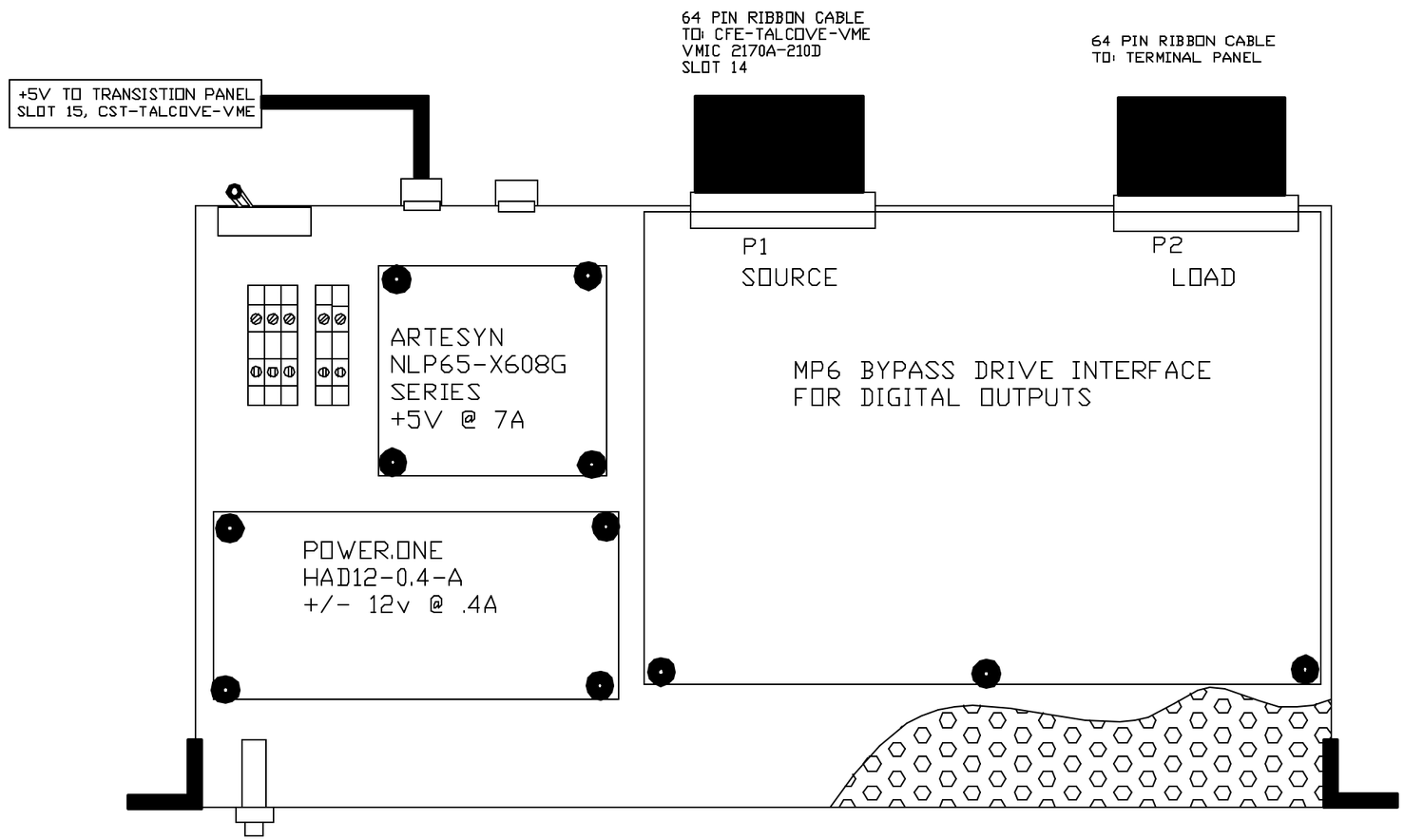

QTY -3	QTY -2	QTY -1	REF DESIGNATOR	ITEM NO.	DESCRIPTION	MANF. PART NO./INT. NO.
		X	X	X	X	X
		X	X	X	X	X
		1	X	3	POWER ONE +/- 12V POWER SUPPLY @.4A	HAD12-0.4-A
		1	X	2	ARTESYN +5V POWER SUPPLY @ 7A	NLP65-X608G
		1	X	1	FLEX BOX	X

INTERPRET IN GENERAL ACCORDANCE WITH ASME Y14.24M-1989

UNLESS OTHERWISE SPECIFIED DIMENSIONS ARE IN INCHES

DECIMAL TOLERANCES
.X ±.030
.XX ±.015
.XXX ±.005
ANGULAR TOLERANCE ± .5°

NA FINISH

BREAK SHARP EDGES MAX. XX MIN. XX

OUTSTANDING ECN

Q.A. CATEGORY A-3

		DATE
DRAWN BY	SCHOENFELD	9/02/03
CHECKED BY		
DESIGN APPROVAL		
ENGINEER APPROVAL		
SUPVR. APPROVAL		

NEXT ASSEMBLY

BROOKHAVEN NATIONAL LABORATORY
UPTON, N.Y. 11973

C-A CONTROLS DIAGRAM

BLDG 901A, TALCOVE CFE-TALCOVE-VME

MP6 POWER SUPPLY CHASSIS

SIZE D | DRAWING NUMBER TALCOVE_HITL_10 | REV. A

MATERIAL: ——— SCALE: FULL WEIGHT: - SHEET 10

*AUTOCAD

Schoenfeld, Controls 11/8/2004 3:30 PM talcove_hitl_11.dwg

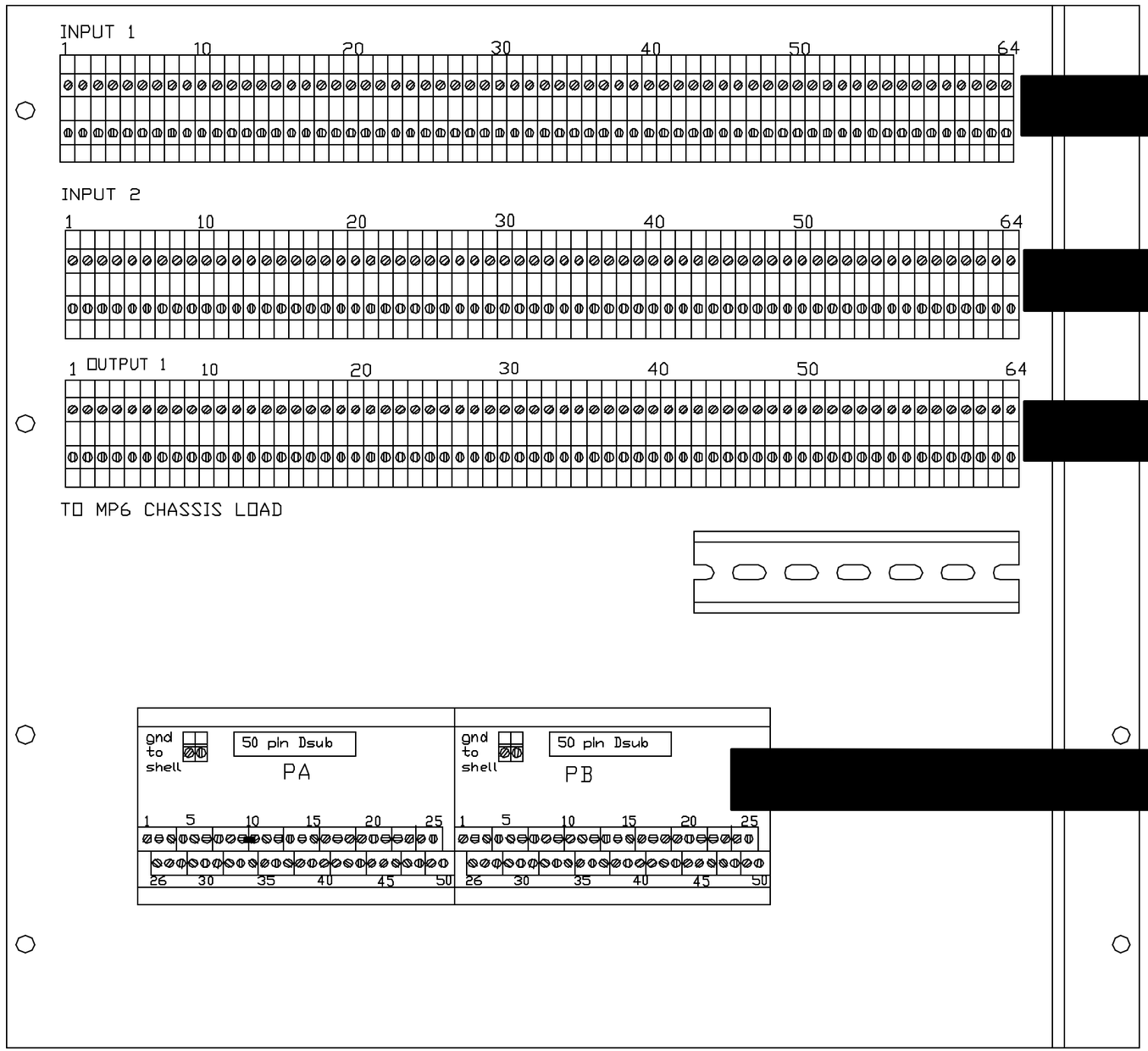

64 PIN RIBBON CABLE TO:
CFE-TALCOVE-VME
VMIC 1160 SLOT 13
HARP / CUP STATUS
SEE SHEET 29

64 PIN RIBBON CABLE TO:
NOT CONNECTED TO BOARD
VACUUM VALVE STATUS
SEE SHEET 30

64 PIN RIBBON CABLE TO:
MP6 POWER SUPPLY CHASSIS
SEE SHEET 31

MP6 VACUUM CONTROLLER
7 READBACKS TO DIGI 16 PORTSERVER
RACK R5 MDS-TALCOVE-TERM2
SEE SHEET 32

QTY REQD			REF DESIGNATION	ITEM NO.	DESCRIPTION	MFG. PART NO./INS. NO.
		X	X	X	X	X
		X	X	X	X	X
		2	X	3	50 PIN DSUB to 50 PIN DSUB CABLE	X
		192	2	2	UNIVERAL TERMINAL BLOCK	A-53600
		2	X	1	50 pin Dsub to Terminal block	X

INTERPRET IN GENERAL ACCORDANCE WITH ASME Y14.24M-1989
UNLESS OTHERWISE SPECIFIED DIMENSIONS ARE IN INCHES
DECIMAL TOLERANCES: .X ±.030 .XX ±.015 .XXX ±.005 ANGULAR TOLERANCE ± .5°
OUTSTANDING ECN: NA
FINISH: BREAK SHARP EDGES MAX. XX MIN. XX

Q.A. CATEGORY A-3
DRAWN BY: Schoenfeld DATE: 9/02/03
CHECKED BY
DESIGN APPROVAL
ENGINEER APPROVAL
SUPVR. APPROVAL
NEXT ASSEMBLY

BROOKHAVEN NATIONAL LABORATORY
UPTON, N.Y. 11973
CONTROLS WIRING DIAGRAM
BLDG 901A, TALCOVE
MP6 TERMINAL WIRING PANEL

SIZE: D
DRAWING NUMBER: TALCOVE_HITL_11
REV.: A
MATERIAL: ——— SCALE: FULL WEIGHT: - SHEET 11

*AUTOCAD

Schoenfeld, Controls 11/8/2004 3:31 PM talcove_hitl_12.dwg

REV.	ZONE	ECN NO.	DATE	BY	CKD	APP.

MDS-TALCOVE-TERM1

BLDG # 901A
RACK # R5
IP # 130.199.111.160

ASSY # 50001185-01

ETHERNET

PORTSERVER TS 16

Port	Device	Signal
1	VACUUM CONTROLLER #1 GRANVILLE PHILLIPS 303 vacgp303mod:talcove-vmeA1	OLD READBACK #1 TO CDC.TALCOVE.VAC1
2	VACUUM CONTROLLER #2 GRANVILLE PHILLIPS 303 vacgp303mod:talcove-vmeA2	OLD READBACK #2 TO CDC.TALCOVE.VAC1
3	VACUUM CONTROLLER #3 GRANVILLE PHILLIPS 303 vacgp303mod:talcove-vmeA3	OLD READBACK #3 TO CDC.TALCOVE.VAC1
4	VACUUM CONTROLLER #4 GRANVILLE PHILLIPS 303 vacgp303mod:talcove-vmeA4	OLD READBACK #4 TO CDC.TALCOVE.VAC1
5	VACUUM CONTROLLER #5 GRANVILLE PHILLIPS 303 vacgp303mod:talcove-vmeA5	OLD READBACK #5 TO CDC.TALCOVE.VAC1
6	VACUUM CONTROLLER #6 GRANVILLE PHILLIPS 303 vacgp303mod:talcove-vmeA6	OLD READBACK #1 TO CDC.TALCOVE.VAC2
7	VACUUM CONTROLLER #7 GRANVILLE PHILLIPS 303 vacgp303mod:talcove-vmeA7	OLD READBACK #2 TO CDC.TALCOVE.VAC2
8	VACUUM CONTROLLER #8 GRANVILLE PHILLIPS 303 vacgp303mod:talcove-vmeA8	OLD READBACK #3 TO CDC.TALCOVE.VAC2
9		
10		
11		
12		
13		
14		
15		
16		

MDS-TALCOVE-TERM2

BLDG # 901A
RACK # R5
IP # 130.199.111.161

ASSY # 50001185-01

ETHERNET

PORTSERVER TS 16

Port	Device	Signal
1	VACUUM CONTROLLER #1 GRANVILLE PHILLIPS 303 vacgp303mod:talcove-vmeB1	OLD READBACK TO TVC.MP6_GP1
2	VACUUM CONTROLLER #2 GRANVILLE PHILLIPS 303 vacgp303mod:talcove-vmeB2	OLD READBACK TO TVC.MP6_GP2
3	VACUUM CONTROLLER #3 GRANVILLE PHILLIPS 303 vacgp303mod:talcove-vmeB3	OLD READBACK TO TVC.MP6_GP3
4	VACUUM CONTROLLER #4 GRANVILLE PHILLIPS 303 vacgp303mod:talcove-vmeB4	OLD READBACK TO TVC.MP6_GP4
5	VACUUM CONTROLLER #5 GRANVILLE PHILLIPS 303 vacgp303mod:talcove-vmeB5	OLD READBACK TO TVC.MP6_GP5
6	VACUUM CONTROLLER #6 GRANVILLE PHILLIPS 303 vacgp303mod:talcove-vmeB6	OLD READBACK TO TVC.MP6_GP6
7	VACUUM CONTROLLER #7 GRANVILLE PHILLIPS 303 vacgp303mod:talcove-vmeB7	OLD READBACK TO TVC.MP6_GP7
8		
9		
10		
11		
12		
13		
14		
15	CFE-TALCOVE-VME RACK R2 SLOT 1 DEBUG	
16	CST-TALCOVE-VME RACK R3 SLOT 1 DEBUG	

-3	-2	-1	REF DESIGNATOR	ECN NO.	DESCRIPTION	MFG. DWG NO./JAN. NO.
QTY REQD						

INTERPRET IN GENERAL ACCORDANCE WITH ASME Y14.24M-1989
UNLESS OTHERWISE SPECIFIED DIMENSIONS ARE IN INCHES
DECIMAL TOLERANCES .X ±.030 .XX ±.015 .XXX ±.005
ANGULAR TOLERANCE ± ±0°
BREAK SHARP EDGES MAX. XX MIN. XX
NA FINISH
OUTSTANDING ECN

Q.A. CATEGORY A-3

		DATE
DRAWN BY	SCHOENFELD	9/17/03
CHECKED BY		
DESIGN APPROVAL		
ENGINEER APPROVAL		
SUPVR. APPROVAL		

NEXT ASSEMBLY

BROOKHAVEN NATIONAL LABORATORY
UPTON, N.Y. 11973

CONTROLS WIRING DIAGRAM
BLDG 901A, TALCOVE
VACUUM READBACK DIGI SERVERS

SIZE D — DRAWING NUMBER TALCOVE_HITL_12 — REV. A

MATERIAL: —— SCALE: FULL WEIGHT: – SHEET 12

*AUTOCAD

REV.	ZONE	ECN NO.	DATE	BY	CKR	APP.

Schoenfeld, Controls 11/8/2004 3:31 PM talcove_hitl_13.dwg

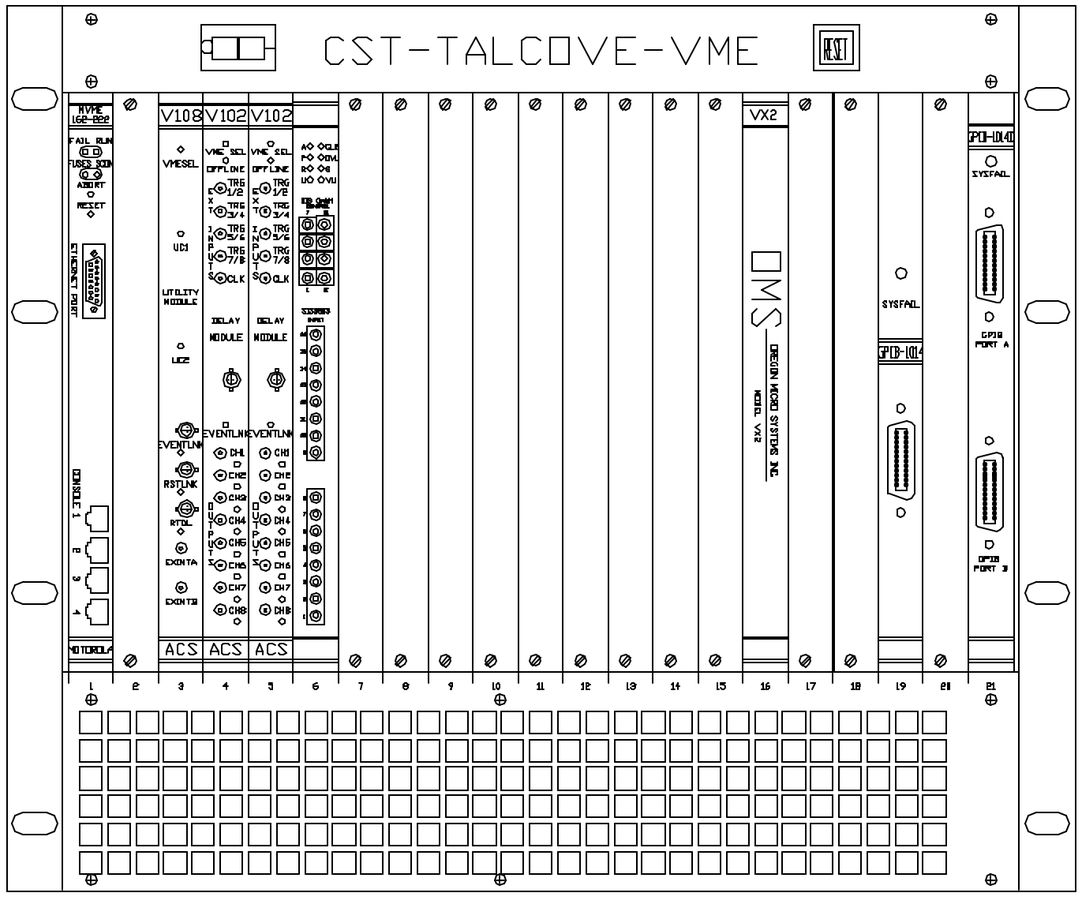

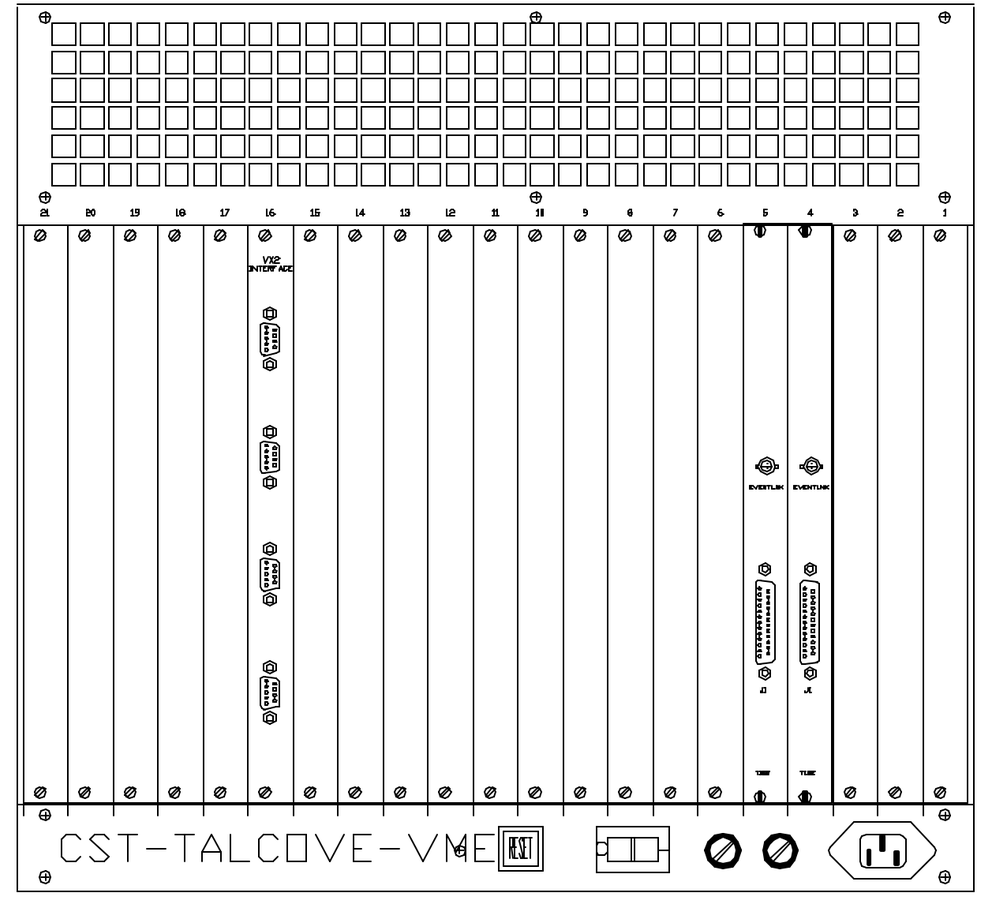

NOTE:
1. ALL UNUSED SLOTS, FRONT & REAR

QTY REQD -3	QTY REQD -2	QTY REQD -1	REF DESIGNATION	ITEM NO.	DESCRIPTION	MANF. PART NO./INT. NO.
		31	see note 1	14	VME BLANK PANEL (ELECTRO SPACE ESFE-P9B5D	
		2	SLOT 4, 5	13	T102 TRANSISTION MODULE	X
		1	SLOT 21	12	GPIB 1014D DUAL IEEE 488 CONTROLLER RD.	GPIB 1014 II
		1	SLOT 19	11	GPIB 1014 IEEE 488 CONTROLLER	GPIB 1014
		1	SLOT 16	6	VX2-D22 MOTOR CONTROL	X
		1	SLOT 6	5	SCALAR S1S3803 0X83283000	X
		2	SLOT 4,5	4	V102 DELAY MODULE	X
		1	SLOT 8	3	V108 UTILITY MODULE	94028094
		1	SLOT 1	2	FRONT END COMPUTER	NVME 162-222
		1	N/A	1	VME CHASSIS	RHIC-93008000

INTERPRET IN GENERAL ACCORDANCE WITH ASME Y14.24M-1989

UNLESS OTHERWISE SPECIFIED DIMENSIONS ARE IN INCHES

DECIMAL TOLERANCES
.X ±.030
.XX ±.015
.XXX ±.005
ANGULAR TOLERANCE ± .5°

OUTSTANDING ECN

NA FINISH

BREAK SHARP EDGES
MAX. XX MIN. XX

Q.A. CATEGORY A-3

		DATE
DRAWN BY	SCHOENFELD	9/02/03
CHECKED BY		
DESIGN APPROVAL		
ENGINEER APPROVAL		
SUPVR. APPROVAL		

NEXT ASSEMBLY

BROOKHAVEN NATIONAL LABORATORY
UPTON, N.Y. 11973

C-A CONTROLS CHASSIS LAYOUT

BLDG 901A, TALCOVE

CST-TALCOVE-VME

SIZE D

TALCOVE_HITL_13

DRAWING NUMBER

REV. A

MATERIAL: ——— SCALE: FULL WEIGHT: - SHEET 13

*AUTOCAD

REV.	ZONE	ECN NO.	DATE	BY	CKR	APP.

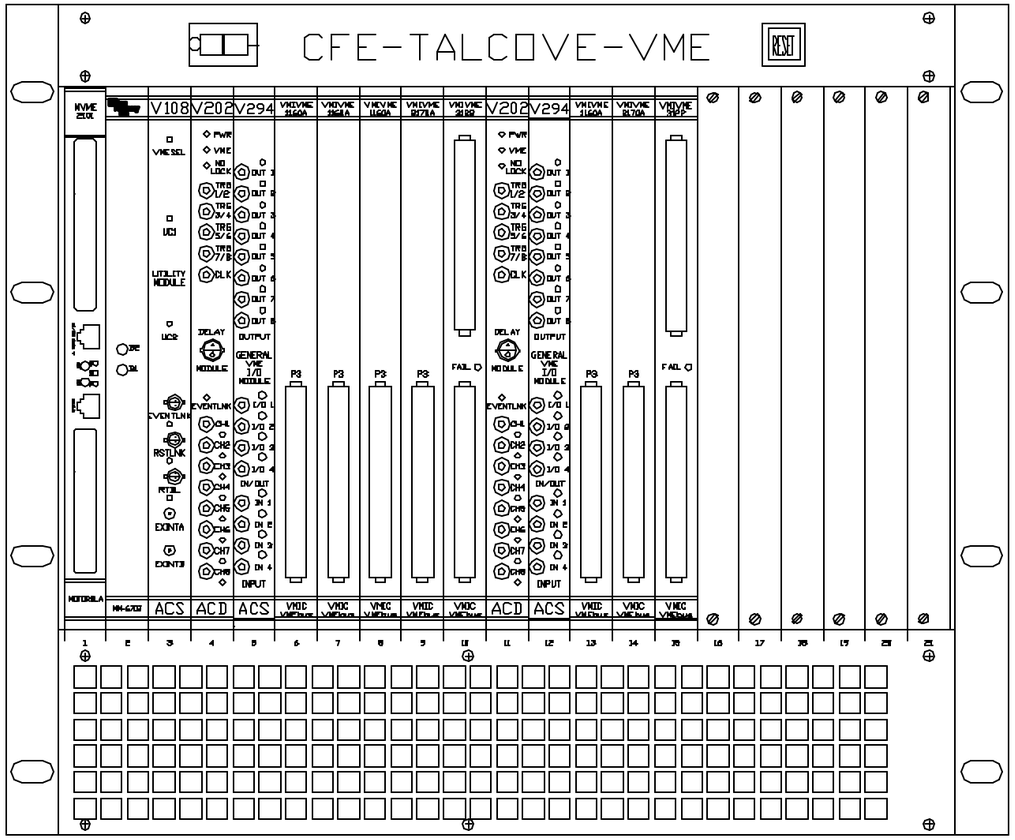

FRONT VIEW

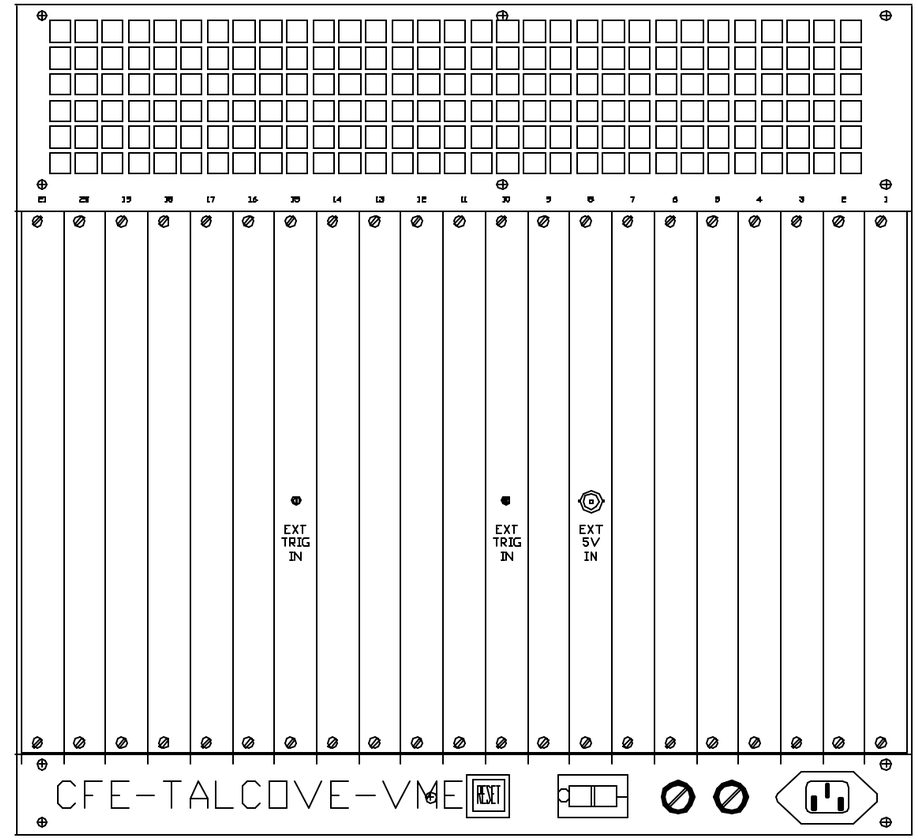

REAR VIEW

NOTE:

1. ALL UNUSED SLOTS, FRONT AND REAR

QTY REQD	REF DESIGNATOR	ITEM NO.	DESCRIPTION	MAT'L DWG NO./INS. NO.
	24	see note 1	11 VME BLANK PANEL (ELECTRO SPACE ESFE-29B50)	
	2	SLOT 10,15	10 VNIVME 3122-01E 16 BIT ADC	
	2	SLOT 9,14	9 VNIVME 2170A-P10D DIGITAL OUTPUT	
	1	SLOT 8	8 VNIVME 1160A-403D DIGITAL INPUT	
	3	SLOT 6,7,13	7 VNIVME 1160A-2001 DIGITAL INPUT	
	2	SLOT 5,12	6 V294 GEN I/O MODULE	
	2	SLOT 4,11	5 V202 EVENT DELAY MODULE	
	1	SLOT 3	4 V108 UTILITY MODULE	94028094
	1	SLOT 2	3 NM-6702C MEMORY MODULE	
	1	SLOT 1	2 FRONT END COMPUTER	NVME2101-1
	1	N/A	1 VME CHASSIS	RHIC-S30080000

INTERPRET IN GENERAL ACCORDANCE WITH ASME Y14.24M-1989

UNLESS OTHERWISE SPECIFIED DIMENSIONS ARE IN INCHES

DECIMAL TOLERANCES
.X ±.030
.XX ±.015
.XXX ±.005
ANGULAR TOLERANCE ± 1°

OUTSTANDING ECN: NA

FINISH: BREAK SHARP EDGES MAX. XX MIN. XX

Q.A. CATEGORY A-3

		DATE
DRAWN BY	SCHOENFELD	9/02/03
CHECKED BY		
DESIGN APPROVAL		
ENGINEER APPROVAL		
SUPVR. APPROVAL		

NEXT ASSEMBLY

BROOKHAVEN NATIONAL LABORATORY
ASSOCIATED UNIVERSITIES, INC.
UPTON, N.Y. 11973

TALCOVE CONTROLS

BLDG 901A, TALCOVE

CFE-TALCOVE-VME

SIZE: D

DRAWING NUMBER: TALCOVE_HITL_14

REV. A

MATERIAL: ——— SCALE: NA WEIGHT: – SHEET 14

*AUTOCAD

Schoenfeld, Controls 11/8/2004 3:32 PM talcove_hitl_15.dwg

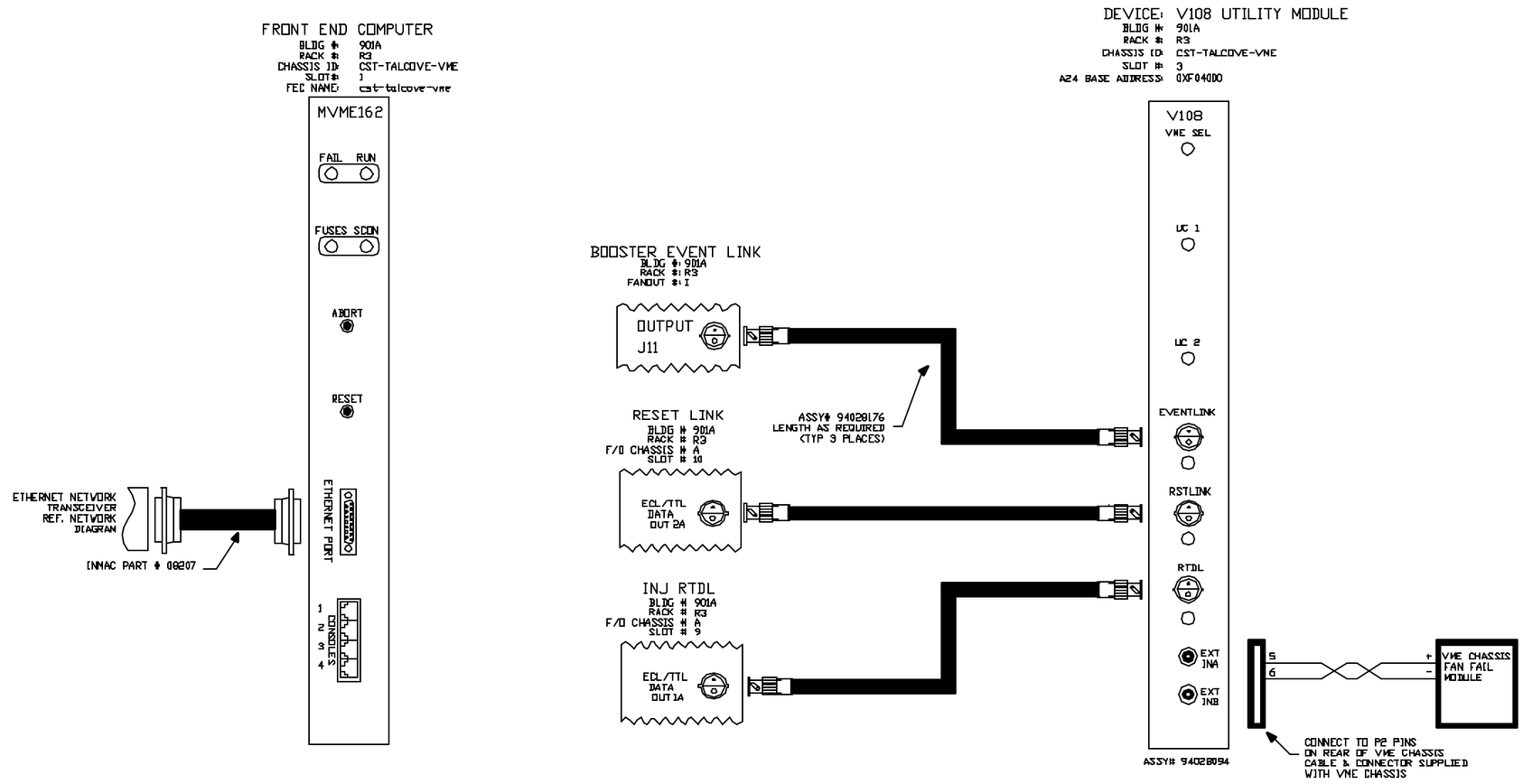

JUMPER LIST

E25 through E50 are configured for remote reset address at the time of board acceptance test.
DO NOT MODIFY!

Remote reset pulls VME SYS Reset.
E38-E60, E39-E61

A24 BASE ADDRESS= 4000h
E1-E13, E2-E14, E3-E15, E4-E16, E5-E17, E6-E18
E7-E19, E8-E20, E9-E21, E10-E22, E11-E24, E57-E23
SV1=OPEN
SV2=CLOSED
SV3=OPEN
SV4=OPEN

INTERPRET IN GENERAL ACCORDANCE WITH ASME Y14.24M-1989	Q.A. CATEGORY A-3		DATE	BROOKHAVEN NATIONAL LABORATORY UPTON, N.Y. 11973
	DRAWN BY	SCHOENFELD	9/02/03	CONTROLS WIRING DIAGRAM
UNLESS OTHERWISE SPECIFIED DIMENSIONS ARE IN INCHES	CHECKED BY			BLDG 901A, TALCOVE CST-TALCOVE-VME
DECIMAL TOLERANCES .X ±.030 .XX ±.015 .XXX ±.005 ANGULAR TOLERANCE ± .5°	DESIGN APPROVAL			FT END COMP /V108 UTIL MODULE
	ENGINEER APPROVAL			
	SUPVR. APPROVAL			SIZE D — TALCOVE_HITL_15 — REV. A
NA FINISH — BREAK SHARP EDGES — MAX. XX MIN. XX	NEXT ASSEMBLY			DRAWING NUMBER
OUTSTANDING ECN				MATERIAL: — SCALE: FULL WEIGHT: - SHEET 15

-3 -2 -1 QTY REQD | REF DESIGNATOR | ECN NO. | DESCRIPTION | MFG. DWG NO./ITM NO.

1 *AUTOCAD

Schoenfeld, Controls 11/8/2004 3:32 PM talcove_hitl_16.dwg

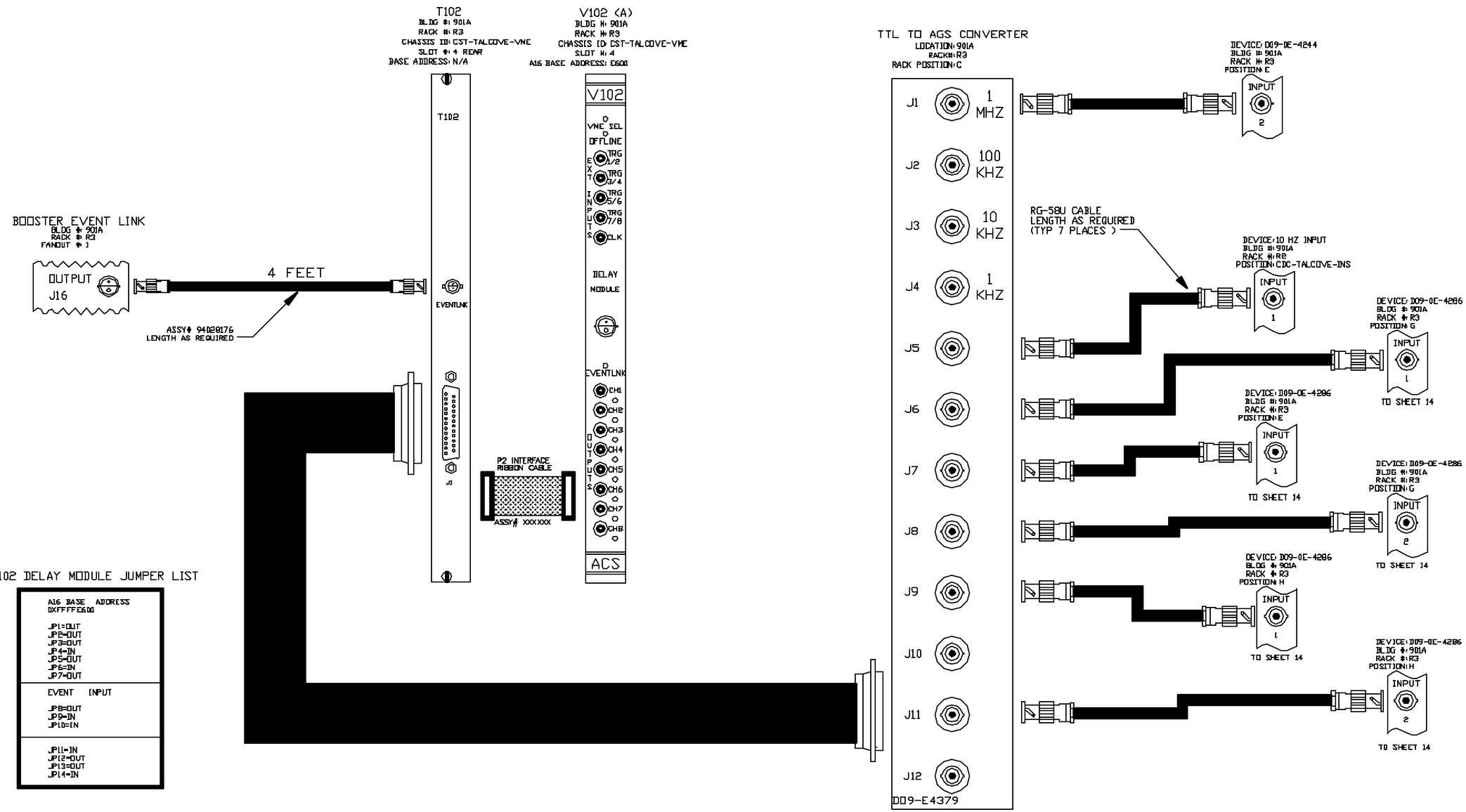

V102 DELAY MODULE JUMPER LIST

A16 BASE ADDRESS DXFFFFE600	
JP1=OUT	
JP2=OUT	
JP3=OUT	
JP4=IN	
JP5=OUT	
JP6=IN	
JP7=OUT	
EVENT	INPUT
JP8=OUT	
JP9=IN	
JP10=IN	
JP11=IN	
JP12=OUT	
JP13=OUT	
JP14=IN	

REV.	ZONE	ECN NO.	DATE	BY	CKR	APP.

-3 -2 -1 QTY REQD	REF DESIGNATION	ITEM NO.	DESCRIPTION		MFG. DWG NO.&ITM NO.
	INTERPRET IN GENERAL ACCORDANCE WITH ASME Y14.24M-1989	Q.A. CATEGORY A-3	DATE	BROOKHAVEN NATIONAL LABORATORY UPTON, N.Y. 11973	
		DRAWN BY SCHOENFELD	9/02/03		
	UNLESS OTHERWISE SPECIFIED DIMENSIONS ARE IN INCHES	CHECKED BY		C-A CONTROLS WIRING DIAGRAM	
	DECIMAL TOLERANCES: .X ± .030 .XX ± .015 .XXX ± .005 ANGULAR TOLERANCE ± 5°	DESIGN APPROVAL		BLDG 901A, TALCOVE CST-TALCOVE-VME	
		ENGINEER APPROVAL		V102 DELAY MODULE # 1	
		SUPVR. APPROVAL		SIZE D	TALCOVE_HITL_16 REV. A
OUTSTANDING ECN	NA FINISH	BREAK SHARP EDGES MAX. XX MIN. XX	NEXT ASSEMBLY	DRAWING NUMBER	
				MATERIAL: ———	SCALE: FULL WEIGHT: - SHEET 16

*AUTOCAD

Schoenfeld, Controls 11/8/2004 3:33 PM talcove_hitl_17.dwg

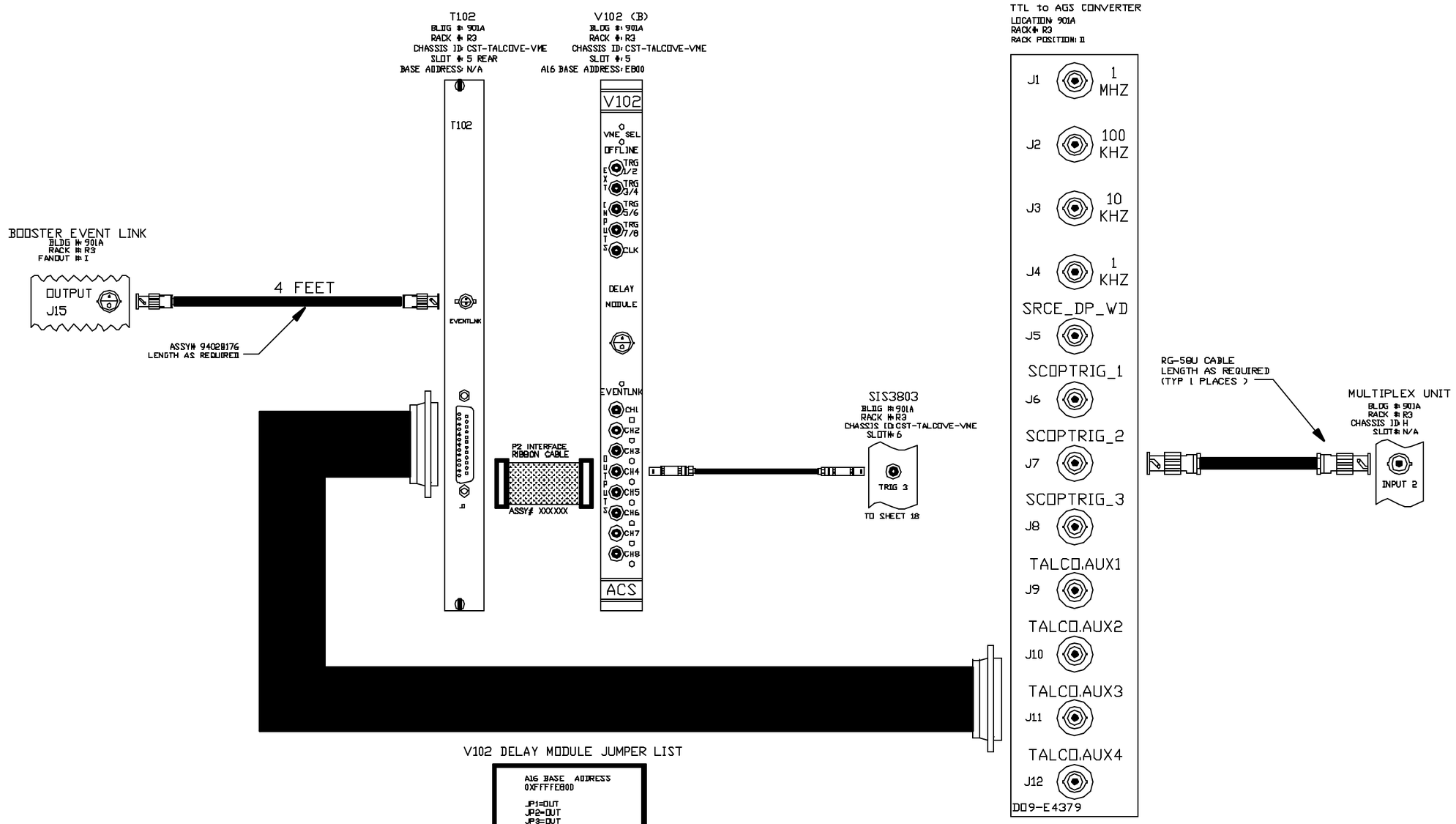

V102 DELAY MODULE JUMPER LIST

A16 BASE ADDRESS 0XFFFFE800 JP1=OUT JP2=OUT JP3=OUT JP4=IN JP5=OUT JP6=IN JP7=IN
EVENT INPUT JP8=OUT JP9=IN JP10=IN
JP11=IN JP12=OUT JP13=OUT JP14=IN

INTERPRET IN GENERAL ACCORDANCE WITH ASME Y14.24M-1989	Q.A. CATEGORY A-3	DATE	BROOKHAVEN NATIONAL LABORATORY UPTON, N.Y. 11973
UNLESS OTHERWISE SPECIFIED DIMENSIONS ARE IN INCHES	DRAWN BY SCHOENFELD	8/02/03	C-A CONTROLS WIRING DIAGRAM
DECIMAL TOLERANCES .X ±.030 .XX ±.015 .XXX ±.005 ANGULAR TOLERANCE ± .5°	CHECKED BY		BLDG 901A, TALCOVE CST-TALCOVE-VME
	DESIGN APPROVAL		V102 DELAY MODULE # 2
	ENGINEER APPROVAL		
	SUPVR. APPROVAL		
NA FINISH	BREAK SHARP EDGES MAX. XX MIN. XX	NEXT ASSEMBLY	SIZE D — TALCOVE_HITL_17 — REV. A
OUTSTANDING ECN			MATERIAL: — SCALE: FULL WEIGHT: - SHEET 17

*AUTOCAD

Schoenfeld, Controls 11/8/2004 3:33 PM talcove_hltl_18.dwg

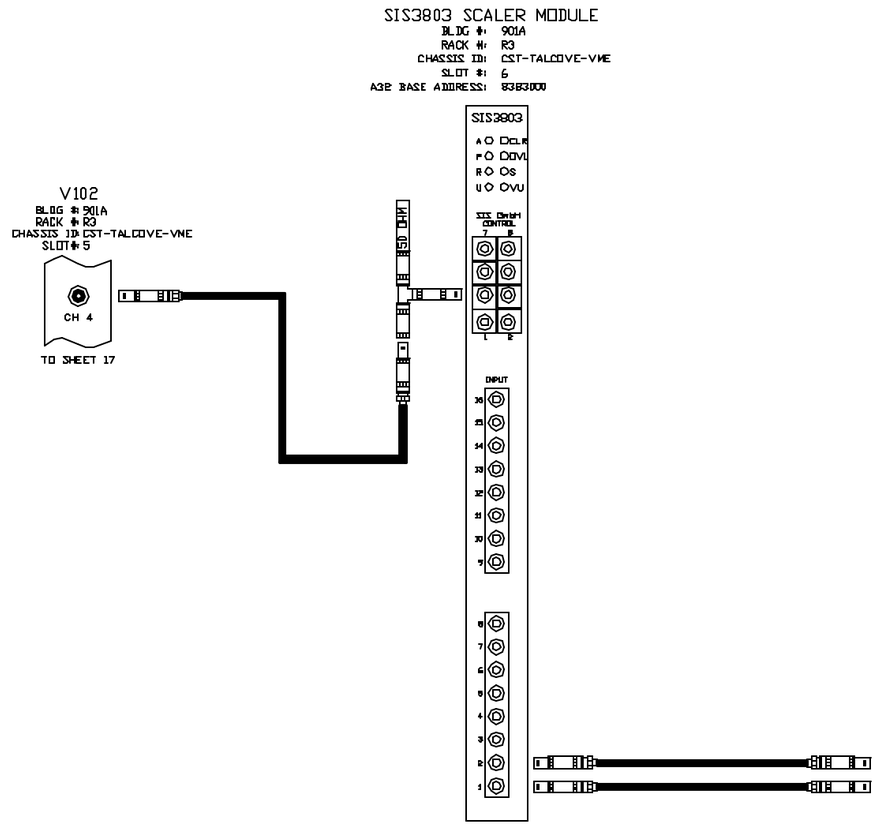

SIS3803 SCALER MODULE JUMPER LIST

```
A32 BASE  ADDRESS
0X08383000

EN_A16=OUT      J101-108=IN
EN_A24=OUT        J115=OUT
EN_A32=IN           J500=IN
                    J520=IN

SW_A32U= 0
SW_A32L= 0
SW_A24U= 3
SW_A24L= 0
SW_A16U= 3

J_ALL=IN
```

REV.	ZONE	ECN NO.	DATE	BY	CKD	APP.

-3 -2 -1 QTY REQD	REF DESIGNATION / ITEM NO.	DESCRIPTION		MANF. PART NO./INT. NO.
INTERPRET IN GENERAL ACCORDANCE WITH ASME Y14.24M-1989	Q.A. CATEGORY A-3	DATE	BROOKHAVEN NATIONAL LABORATORY UPTON, N.Y. 11973	
	DRAWN BY Schoenfeld	10/13/04		
UNLESS OTHERWISE SPECIFIED DIMENSIONS ARE IN INCHES	CHECKED BY		CONTROLS WIRING DIAGRAM	
DECIMAL TOLERANCES: .X ±.030 .XX ±.015 .XXX ±.005 ANGULAR TOLERANCE ± .5°	DESIGN APPROVAL		BLDG 901A, TALCOVE CST-TALCOVE-VME	
	ENGINEER APPROVAL		SCALER MODULE	
	SUPVR. APPROVAL		SIZE D — TALCOVE_HITL_18 — REV. A	
NA / FINISH	BREAK SHARP EDGES MAX. XX MIN. XX	NEXT ASSEMBLY	DRAWING NUMBER	
OUTSTANDING ECN			MATERIAL: —— SCALE: FULL WEIGHT: - SHEET 18	

1 *AUTOCAD

Schoenfeld, Controls 11/8/2004 3:34 PM talcove_hitl_19.dwg

TRANSITION MODULE VX2
BLDG #: 901A
RACK #: R3
CHASSIS ID: CST-TALCOVE-VME
SLOT #: 16 REAR
BASE ADDRESS: N/A

VX2-022
BLDG #: 901A
RACK #: R3
CHASSIS ID: CST-TALCOVE-VME
SLOT #: 16
?? BASE ADDRESS: ??????

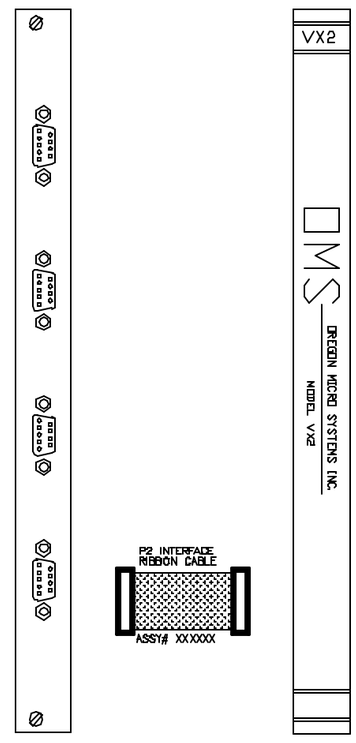

SWITCH POSISTIONS

S1:	1=	2=	3=	4=	5=	6=	7=	8=
S2:	1=	2=	3=	4=	5=	6=	7=	8=
S3:	1=	2=	3=	4=	5=	6=	7=	8=
S5:	1=	2=	3=	4=	5=	6=	7=	8=
S6:	1=	2=	3=	4=	5=	6=	7=	8=
S7:	1=	2=	3=	4=	5=	6=	7=	8=
S8:	1=	2=	3=	4=	5=	6=	7=	8=
S9:	1=	2=	3=	4=	5=	6=	7=	8=

REV.	ZONE	ECN NO.	DATE	BY	CKD	APP.

-3	-2	-1	REF DESIGNATION	FSCM NO.	DESCRIPTION	MAT'L DWG NO.(LAN NO.)
QTY REQD						

INTERPRET IN GENERAL ACCORDANCE WITH ASME Y14.24M-1989
UNLESS OTHERWISE SPECIFIED DIMENSIONS ARE IN INCHES
DECIMAL TOLERANCES
.X ±.030
.XX ±.015
.XXX ±.005
ANGULAR TOLERANCE ± .5°
OUTSTANDING ECN
NA FINISH
BREAK SHARP EDGES
MAX. XX MIN. XX

Q.A. CATEGORY A-3

		DATE
DRAWN BY	Schoenfeld	11/19/04
CHECKED BY		
DESIGN APPROVAL		
ENGINEER APPROVAL		
SUPVR. APPROVAL		

NEXT ASSEMBLY

BROOKHAVEN NATIONAL LABORATORY
UPTON, N.Y. 11973
CONTROLS WIRING DIAGRAM
BLDG 901A, TALCOVE CST-TALCOVE-VME
VX2 OMS MOTOR CONTROLLER

SIZE D
TALCOVE_HITL_19
DRAWING NUMBER
REV. A

MATERIAL: ——— SCALE: FULL WEIGHT: - SHEET 19

*AUTOCAD

Schoenfeld, Controls 11/8/2004 3:34 PM talcove_hitl_20.dwg

REV.	ZONE	ECN NO.	DATE	BY	CKR	APP.

GPIB 1014 FOR 488 DEVICE CONTROLLERS
BLDG #: 901A
RACK #: R3
CHASSIS ID: CST-TALCOVE-VME
SLOT #: 19
A24 BASE ADDRESS: 0XF0002000

GPIB 1014D FOR TRANSLATOR 488 CONNECTIONS
BLDG #: 901A
RACK #: R3
CHASSIS ID: CST-TALCOVE-VME
SLOT #: 21
A24 BASE ADDRESS: 0XF0002400

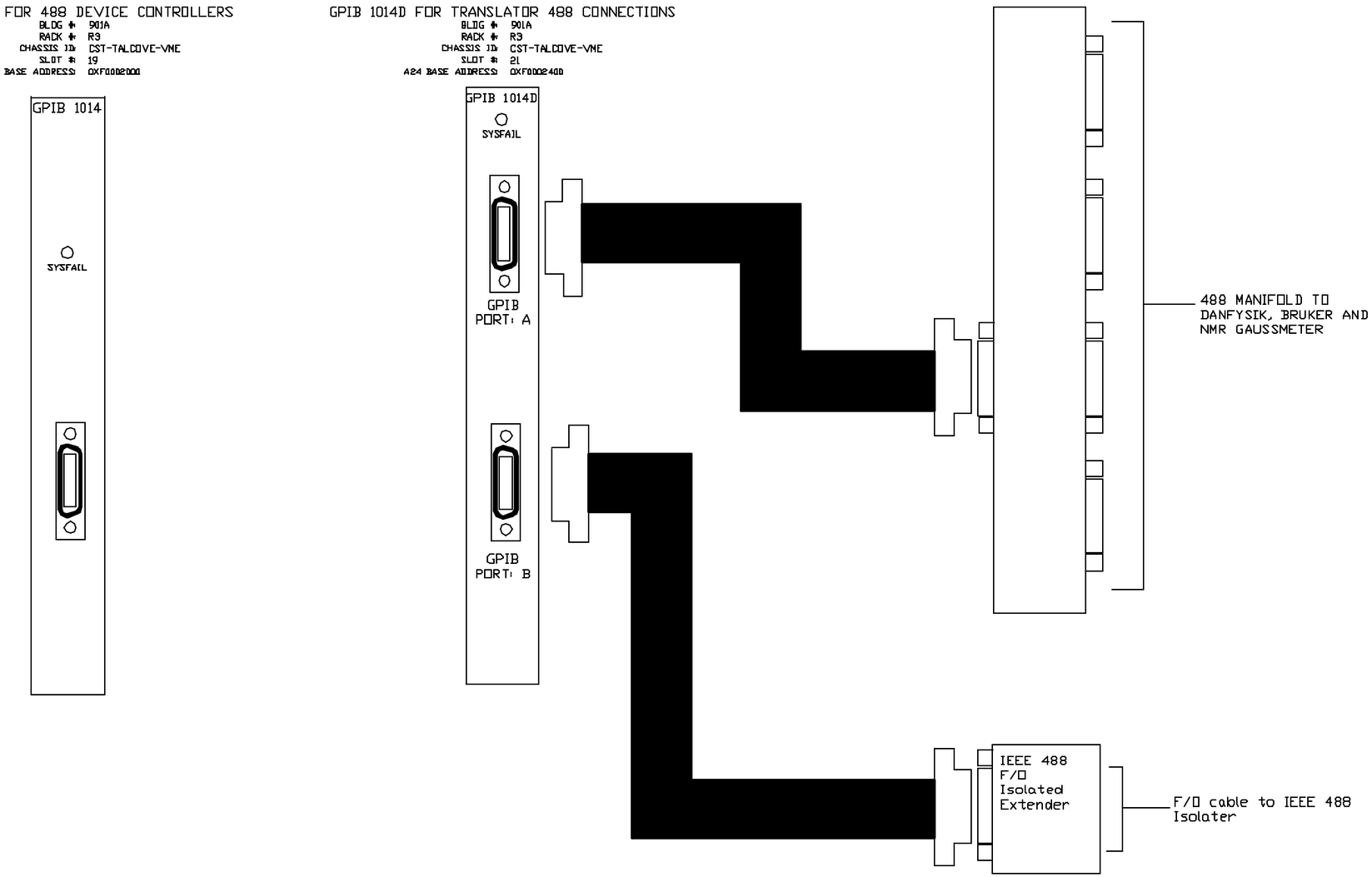

-3	-2	-1	REF DESIGNATOR	ECN NO.	DESCRIPTION	MFG. DWG NO./INV. NO.
QTY REQD						

INTERPRET IN GENERAL ACCORDANCE WITH ASME Y14.24M-1989
UNLESS OTHERWISE SPECIFIED DIMENSIONS ARE IN INCHES
DECIMAL TOLERANCES
.X ±.030
.XX ±.015
.XXX ±.005
ANGULAR TOLERANCE ± .5°
NA FINISH
BREAK SHARP EDGES
MAX. XX MIN. XX
OUTSTANDING ECN

Q.A. CATEGORY A-3		DATE
DRAWN BY	SCHOENFELD	9/02/03
CHECK'D BY		
DESIGN APPROVAL		
ENGINEER APPROVAL		
SUPVR. APPROVAL		

NEXT ASSEMBLY

BROOKHAVEN NATIONAL LABORATORY
UPTON, N.Y. 11973
C-A CONTROLS WIRING DIAGRAM
BLDG 901A, TALCOVE CST-TALCOVE-VME
GPIB INTER FOR DEVICE CNTRLS

SIZE D | DRAWING NUMBER TALCOVE_HITL_20 | REV. A

MATERIAL: —— SCALE: FULL WEIGHT: - SHEET 20

*AUTOCAD

Schoenfeld, Controls 11/8/2004 3:35 PM talcove_hitl_21.dwg

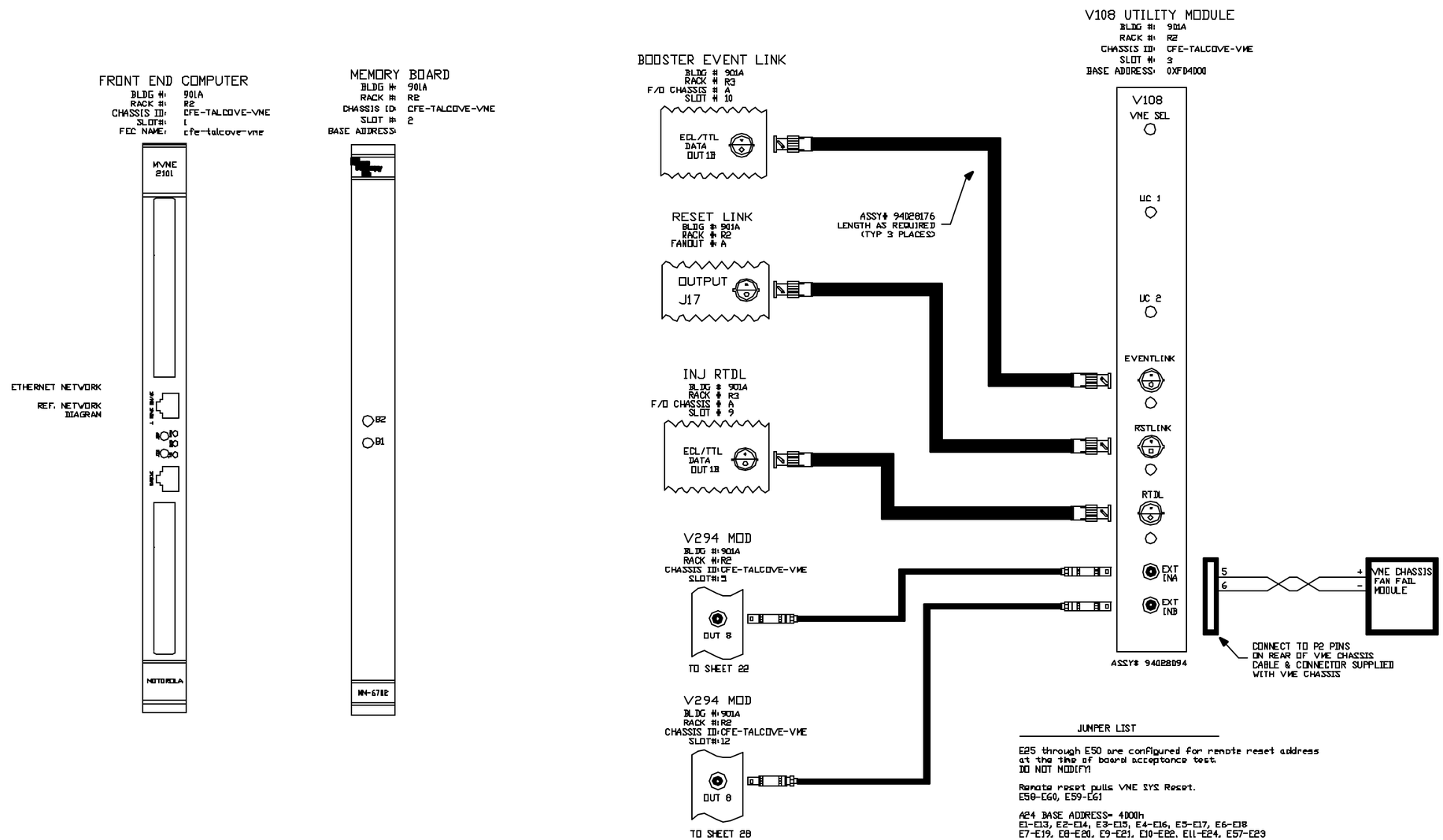

JUMPER LIST

E25 through E50 are configured for remote reset address at the time of board acceptance test.
DO NOT MODIFY!

Remote reset pulls VME SYS Reset.
E58-E60, E59-E61

A24 BASE ADDRESS= 4000h
E1-E13, E2-E14, E3-E15, E4-E16, E5-E17, E6-E18
E7-E19, E8-E20, E9-E21, E10-E22, E11-E24, E57-E23
SW1=OPEN
SW2=CLOSED
SW3=OPEN
SW4=OPEN

REV.	ZONE	ECN NO.	DATE	BY	CKR	APP.

INTERPRET IN GENERAL ACCORDANCE WITH ASME Y14.24M-1989	Q.A. CATEGORY A-3	DATE	BROOKHAVEN NATIONAL LABORATORY	
	DRAWN BY SCHOENFELD	01/02/13	UPTON, N.Y. 11973	
UNLESS OTHERWISE SPECIFIED DIMENSIONS ARE IN INCHES	CHECKED BY		C-A CONTROLS WIRING DIAGRAM	
DECIMAL TOLERANCES .X ±.030 .XX ±.015 .XXX ±.005 ANGULAR TOLERANCE ± 1°	DESIGN APPROVAL		901A, VME CHASSIS CFE-TALCOVE-VME	
	ENGINEER APPROVAL		FT END COMP /V108 UTIL MODULE	
	SUPVR. APPROVAL		SIZE D	TALCOVE_HITL_21 REV. A
NA FINISH	BREAK SHARP EDGES MAX. XX MIN. XX	NEXT ASSEMBLY	DRAWING NUMBER	
OUTSTANDING ECN			MATERIAL: — SCALE: FULL WEIGHT: - SHEET 21	

*AUTOCAD

Schoenfeld, Controls 11/8/2004 3:35 PM talcove_hitl_22.dwg

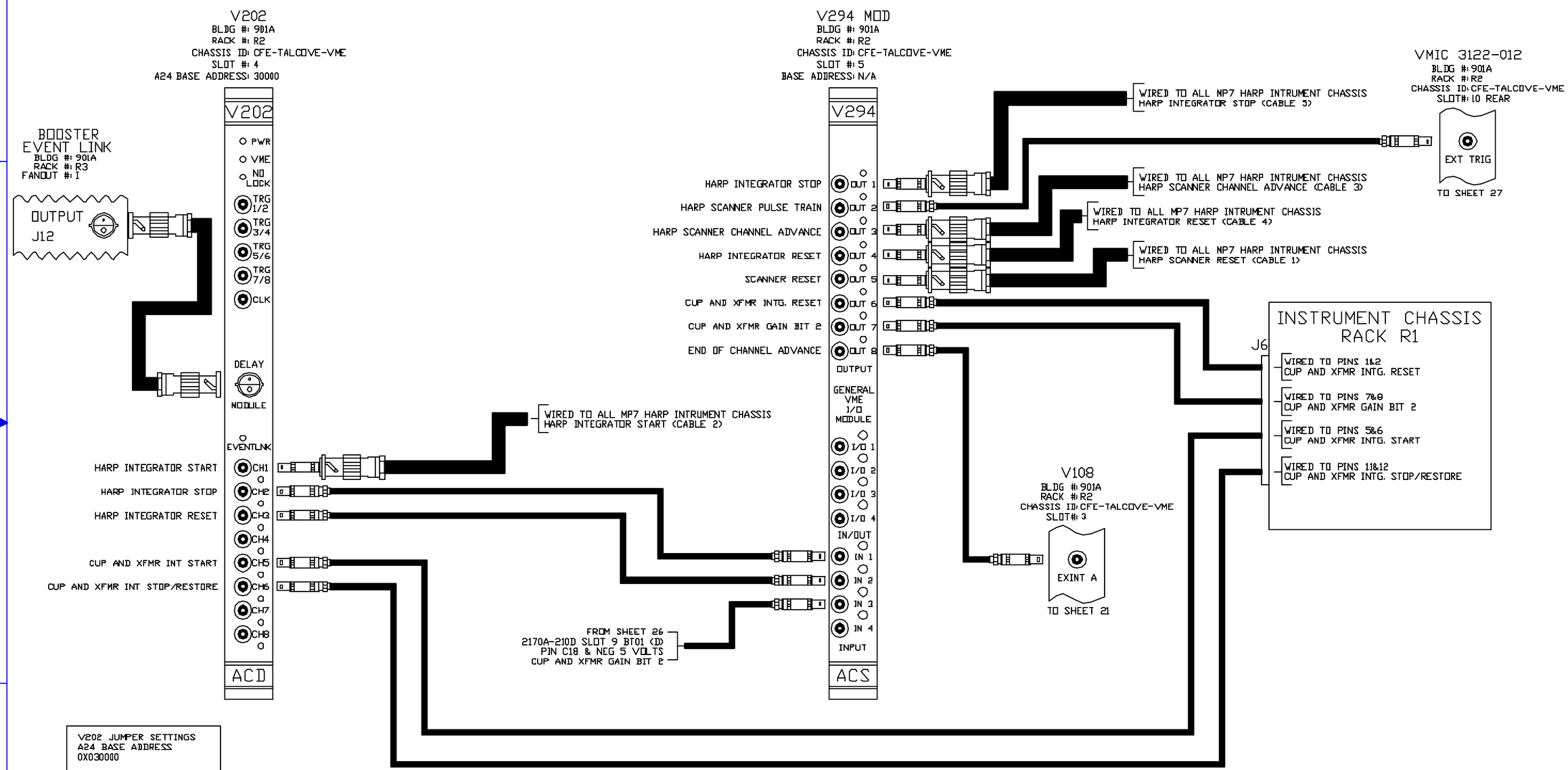

V202 JUMPER SETTINGS
A24 BASE ADDRESS
0X030000

SW1	JP1=IN
A16=1	JP2=PIN 1 TO 2
A17=1	JP3=IN
A18=0	JP4=OUT
A19=0	JP5=OUT
A20=0	JP6=OUT
A21=0	JP7=OUT
A22=0	JP8=OUT
A23=0	JP9=OUT
	JP10=IN
	JP11,12,13=IN

-3	-4	-7	REF DESIGNATOR	ECN NO.	DESCRIPTION	MAT'L DWG NO./MFR. NO.
QTY REQD						

INTERPRET IN GENERAL ACCORDANCE WITH ASME Y14.24M-1989
UNLESS OTHERWISE SPECIFIED DIMENSIONS ARE IN INCHES
DECIMAL TOLERANCES .X ±.030 .XX ±.015 .XXX ±.005
ANGULAR TOLERANCE ± .5°
NA FINISH
BREAK SHARP EDGES MAX. XX MIN. XX
OUTSTANDING ECN
NEXT ASSEMBLY

Q.A. CATEGORY A-3
DRAWN BY Schoenfeld DATE 10/12/04
CHECKED BY
DESIGN APPROVAL
ENGINEER APPROVAL
SUPVR. APPROVAL

BROOKHAVEN NATIONAL LABORATORY
UPTON, N.Y. 11973
C-A CONTROLS WIRING DIAGRAM
BLDG 901A, TALCOVE CFE-TALCOVE-VME
V202 AND V294 WIRING DIAGRAM

SIZE D
TALCOVE_HITL_22
DRAWING NUMBER
REV. A
MATERIAL: ——— SCALE: FULL WEIGHT: - SHEET 22

1 *AUTOCAD

Schoenfeld, Controls 11/8/2004 3:35 PM talcove_hitl_23.dwg

REV.	ZONE	ECN NO.	DATE	BY	CKR	APP.

VMIC 1160A-200D (C)
BLDG #: 901A
RACK #: R2
CHASSIS ID: CFE-TALCOVE-VME
SLOT #: 6
A16 BASE ADDRESS: E040

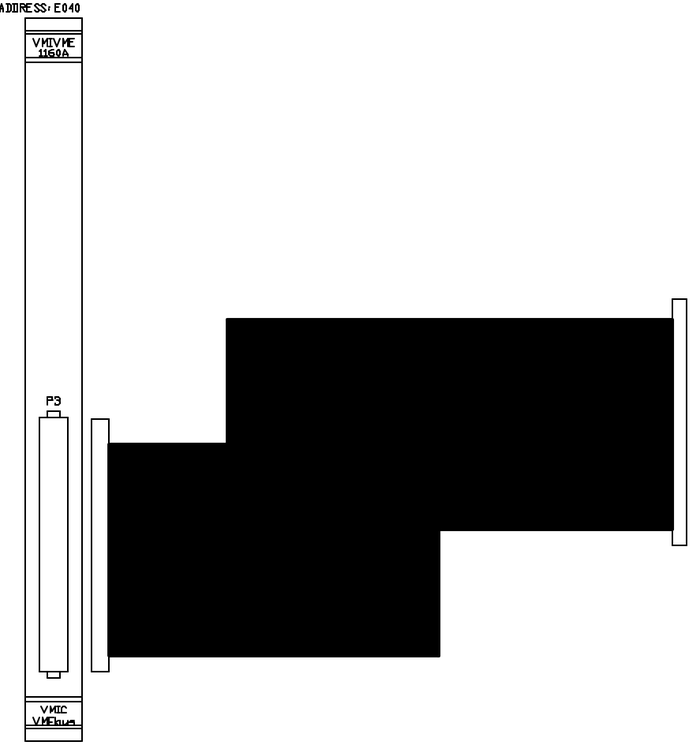

BT01 I/O PANEL
BLDG #: 901A
RACK #: R1
PANEL #: A

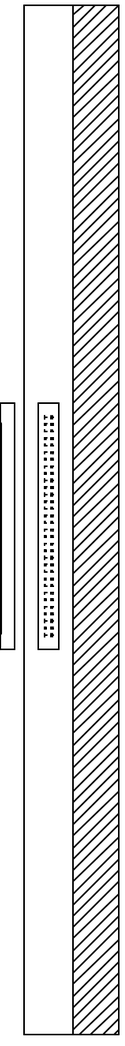

		TYPE OF SIGNAL	VAGO STRIP	NAME OF SIGNAL
A1		OUT STATUS HI	PIN 7 INST1-1	TTL.10MW020
C1		OUT STATUS LOW	PIN 8 INST1-1	
A2		IN STATUS HI	PIN 5 INST1-1	
C2		IN STATUS LOW	PIN 6 INST1-1	
A3		REM/LOC STATUS HI	PIN 15 INST1-1	
C3		REM/LOC STATUS LOW	PIN 16 INST1-1	
A4		OUT STATUS HI	PIN 11 INST1-1	
C4		OUT STATUS LOW	PIN 12 INST1-1	
A5		IN STATUS HI	PIN 9 INST1-1	
C5		IN STATUS LOW	PIN 10 INST1-1	
A6		REM/LOC STATUS HI	PIN 15 INST1-1	
C6		REM/LOC STATUS LOW	PIN 16 INST1-1	
A7		HI VOLT STATUS HI	PIN 13 INST1-1	
C7		HI VOLT STATUS LOW	PIN 14 INST1-1	
A8		OUT STATUS HI	PIN 7 INST1-2	TTL.11MW010
C8		OUT STATUS LOW	PIN 8 INST1-2	
A9		IN STATUS HI	PIN 5 INST1-2	
C9		IN STATUS LOW	PIN 6 INST1-2	
A10		REM/LOC STATUS HI	PIN 15 INST1-2	
C10		REM/LOC STATUS LOW	PIN 16 INST1-2	
A11		OUT STATUS HI	PIN 11 INST1-3	TTL.11FC030
C11		OUT STATUS LOW	PIN 12 INST1-3	
A12		IN STATUS HI	PIN 9 INST1-3	
C12		IN STATUS LOW	PIN 10 INST1-3	
A13		REM/LOC STATUS HI	PIN 15 INST1-3	
C13		REM/LOC STATUS LOW	PIN 16 INST1-3	
A14		HI VOLT STATUS HI	PIN 13 INST1-3	
C14		HI VOLT STATUS LOW	PIN 14 INST1-3	
A15		OUT STATUS HI	PIN 7 INST1-3	TTL.11MW030
C15		OUT STATUS LOW	PIN 8 INST1-3	
A16		IN STATUS HI	PIN 5 INST1-3	
C16		IN STATUS LOW	PIN 6 INST1-3	
A17		REM/LOC STATUS HI	PIN 15 INST1-3	
C17		REM/LOC STATUS LOW	PIN 16 INST1-3	
A18		OUT STATUS HI	PIN 11 INST1-5	TTL.11FC060
C18		OUT STATUS LOW	PIN 12 INST1-5	
A19		IN STATUS HI	PIN 9 INST1-5	
C19		IN STATUS LOW	PIN 10 INST1-5	
A20		REM/LOC STATUS HI	PIN 15 INST1-5	
C20		REM/LOC STATUS LOW	PIN 16 INST1-5	
A21		HI VOLT STATUS HI	PIN 13 INST1-5	
C21		HI VOLT STATUS LOW	PIN 14 INST1-5	
A22		OUT STATUS HI	PIN 7 INST1-4	TTL.11MW040
C22		OUT STATUS LOW	PIN 8 INST1-4	
A23		IN STATUS HI	PIN 5 INST1-4	
C23		IN STATUS LOW	PIN 6 INST1-4	
A24		REM/LOC STATUS HI	PIN 15 INST1-4	
C24		REM/LOC STATUS LOW	PIN 16 INST1-4	
A25		OUT STATUS HI	PIN 11 INST1-7	TTL.11FC165
C25		OUT STATUS LOW	PIN 12 INST1-7	
A26		IN STATUS HI	PIN 9 INST1-7	
C26		IN STATUS LOW	PIN 10 INST1-7	
A27		REM/LOC STATUS HI	PIN 15 INST1-7	
C27		REM/LOC STATUS LOW	PIN 16 INST1-7	
A28		HI VOLT STATUS HI	PIN 13 INST1-7	
C28		HI VOLT STATUS LOW	PIN 14 INST1-7	
A29		OUT STATUS HI	PIN 7 INST1-5	TTL.11MW060
C29		OUT STATUS LOW	PIN 8 INST1-5	
A30		IN STATUS HI	PIN 5 INST1-5	
C30		IN STATUS LOW	PIN 6 INST1-5	
A31		REM/LOC STATUS HI	PIN 13 INST1-5	
C31		REM/LOC STATUS LOW	PIN 16 INST1-5	
A32				
C32				

The following jumpers are installed:
J1, J3, J5, J7, J9, J11, J13, J15, J17, J19, J21, J23, J25,
J27, J29, J31, J33, J35, J37, J39, J41, J43, J45, J47,
J49, J51, J53, J55, J57, J59, J61, J63

U35
SW 1-3 OFF
SW 4-8 ON

U34
SW 1 ON
SW 2 OFF
SW 3-8 ON

J65 AM2 For Short Supervisory I/O Access or Short
Nonprivileged I/O Access

-3	-2	-1	REF DESIGNATION	ECN NO.	DESCRIPTION	MFG. DWG NO.&NO.
QTY REQD						

INTERPRET IN GENERAL ACCORDANCE WITH ASME Y14.24M-1989
UNLESS OTHERWISE SPECIFIED DIMENSIONS ARE IN INCHES
DECIMAL TOLERANCES .X ± .030 .XX ± .015 .XXX ± .005
ANGULAR TOLERANCE ± .5°
NA FINISH
BREAK SHARP EDGES MAX. XX MIN. XX
OUTSTANDING ECN

Q.A. CATEGORY A-3

		DATE
DRAWN BY	Schoenfeld	11/8/04
CHECKED BY		
DESIGN APPROVAL		
ENGINEER APPROVAL		
SUPVR. APPROVAL		

NEXT ASSEMBLY

BROOKHAVEN NATIONAL LABORATORY
UPTON, N.Y. 11973
CONTROLS WIRING DIAGRAM
BLDG 901A, TALCOVE CFE-TALCOVE-VME
VMIC 1160A-200D WIRING (C)

SIZE D | DRAWING NUMBER TALCOVE_HITL_23 | REV. A

MATERIAL: ——— SCALE: FULL WEIGHT: - SHEET 23

1 *AUTOCAD

Schoenfeld, Controls 11/8/2004 3:36 PM talcove_hitl_24.dwg

REV.	ZONE	ECN NO.	DATE	BY	CKR	APP.

BT01 I/O PANEL

BLDG #: 901A
RACK #: R1
PANEL #: B

VMIC 1160A-200D (D)
BLDG #: 901A
RACK #: R2
CHASSIS ID: CFE-TALCOVE-VME
SLOT #: 7
A16 BASE ADDRESS: E060

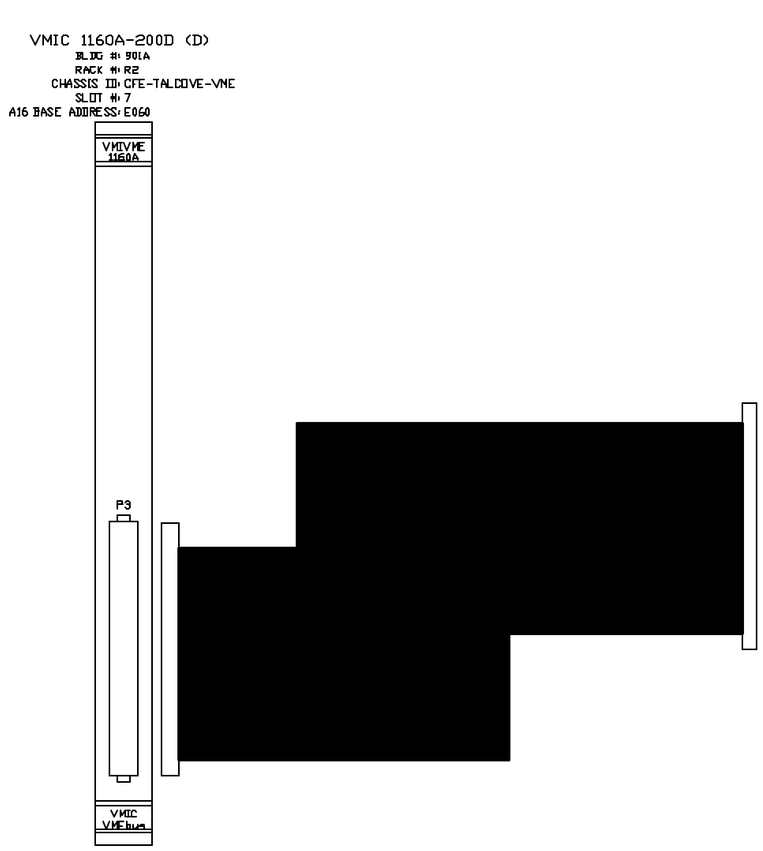

			TYPE OF SIGNAL	VAGO STRIP	NAME OF SIGNAL
A1	C1		OUT STATUS HI	PIN 11 INST1-8	TTL.13FC240
A2	C2		OUT STATUS LOW	PIN 12 INST1-8	
A3	C3		IN STATUS HI	PIN 9 INST1-8	
A4	C4		IN STATUS LOW	PIN 10 INST1-8	
A5	C5		REM/LOC STATUS HI	PIN 15 INST1-8	
A6	C6		REM/LOC STATUS LOW	PIN 16 INST1-8	
A7	C7		HI VOLT STATUS HI	PIN 13 INST1-8	
A8	C8		HI VOLT STATUS LOW	PIN 14 INST1-8	
A9	C9		OUT STATUS HI	PIN 7 INST1-6	TTL.12MW030
A10	C10		OUT STATUS LOW	PIN 8 INST1-6	
A11	C11		IN STATUS HI	PIN 5 INST1-6	
A12	C12		IN STATUS LOW	PIN 6 INST1-6	
A13	C13		REM/LOC STATUS HI	PIN 15 INST1-6	
A14	C14		REM/LOC STATUS LOW	PIN 16 INST1-6	
A15	C15				
A16	C16				
A17	C17				
A18	C18				
A19	C19		OUT STATUS HI	PIN 7 INST1-7	TTL.12MW165
A20	C20		OUT STATUS LOW	PIN 8 INST1-7	
A21	C21		IN STATUS HI	PIN 5 INST1-7	
A22	C22		IN STATUS LOW	PIN 6 INST1-7	
A23	C23		REM/LOC STATUS HI	PIN 13 INST1-7	
A24	C24		REM/LOC STATUS LOW	PIN 16 INST1-7	
A25	C25				
A26	C26				
A27	C27				
A28	C28				
A29	C29		OUT STATUS HI	PIN 7 INST1-8	TTL.13MW240
A30	C30		OUT STATUS LOW	PIN 8 INST1-8	
A31	C31		IN STATUS HI	PIN 5 INST1-8	
A32	C32		IN STATUS LOW	PIN 6 INST1-8	
			REM/LOC STATUS HI	PIN 15 INST1-8	
			REM/LOC STATUS LOW	PIN 16 INST1-8	

The following jumpers are installed:
J1, J3, J5, J7, J9, J11, J13, J15, J17, J19, J21, J23, J25,
J27, J29, J31, J33, J35, J37, J39, J41, J43, J45, J47,
J49, J51, J53, J55, J57, J59, J61, J63

U35
SW 1-3 OFF
SW 4-8 ON

U34
SW 1 ON
SW 2-3 OFF
SW 4-8 ON

J65 AM2 For Short Supervisory I/O Access or Short
Nonprivileged I/O Access

-3	-2	-1	REF DESIGNATION	ITEM NO.	DESCRIPTION	MFG. DWG NO./INS. NO.
QTY REQD						

INTERPRET IN GENERAL ACCORDANCE WITH ASME Y14.24M-1989
UNLESS OTHERWISE SPECIFIED DIMENSIONS ARE IN INCHES
DECIMAL TOLERANCES .X ±.030 .XX ±.015 .XXX ±.005
ANGULAR TOLERANCE ± .5°
NA FINISH
BREAK SHARP EDGES MAX. XX MIN. XX
OUTSTANDING ECN

Q.A. CATEGORY A-3

		DATE
DRAWN BY	Schoenfeld	11/13/04
CHECKED BY		
DESIGN APPROVAL		
ENGINEER APPROVAL		
SUPVR. APPROVAL		

NEXT ASSEMBLY

BROOKHAVEN NATIONAL LABORATORY
UPTON, N.Y. 11973
CONTROLS WIRING DIAGRAM
BLDG 901A, TALCOVE CFE-TALCOVE-VME
VMIC 1160A-200D WIRING (D)

SIZE D | DRAWING NUMBER TALCOVE_HITL_24 | REV. A

MATERIAL: ——— SCALE: FULL WEIGHT: - SHEET 24

1 *AUTOCAD

Schoenfeld, Controls 11/8/2004 3:36 PM talcove_hitl_25.dwg

BT01 I/O PANEL

BLDG #: 901A
RACK #: R4
PANEL #: C

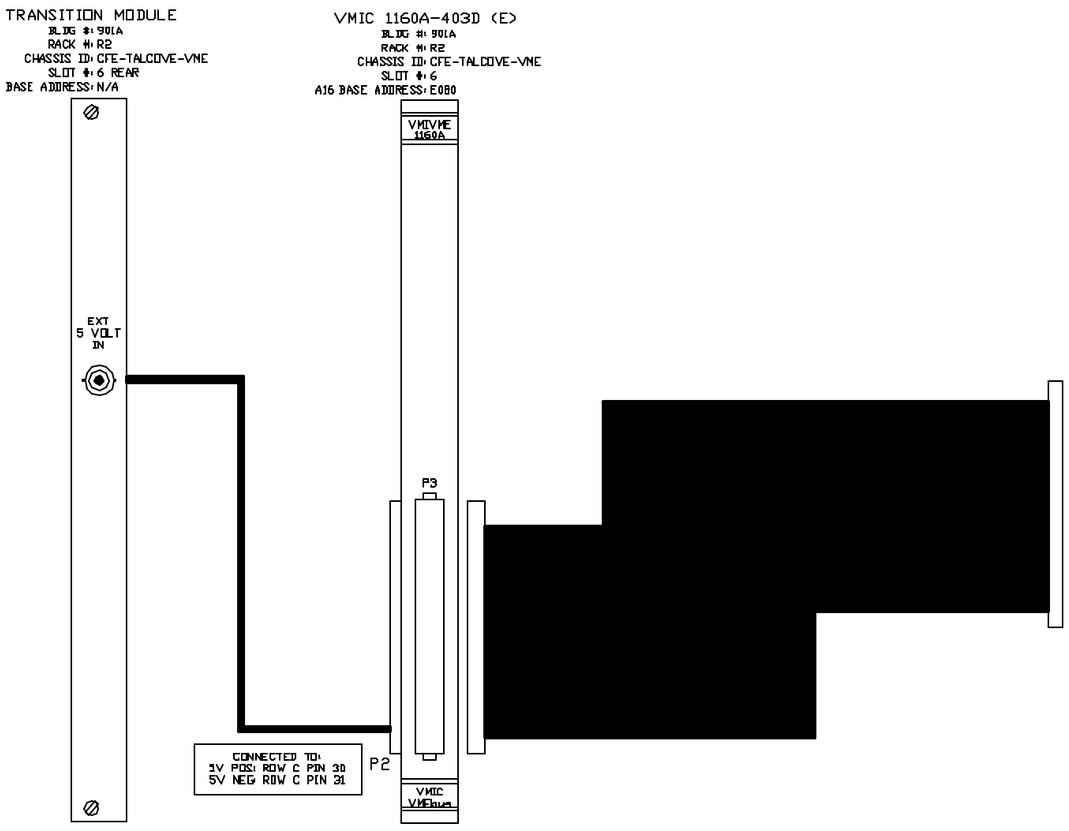

	TYPE OF SIGNAL	WAGO STRIP	NAME OF SIGNAL
A1	OPEN STATUS HI	PIN 11 VAC-2-1	10VP019
C1	OPEN STATUS LOW	PIN 3 VAC-2-1	
A2	CLOSED STATUS HI	PIN 4 VAC-2-1	
C2	CLOSED STATUS LOW	PIN 3 VAC-2-1	
A3	OPEN STATUS HI	PIN 25 VAC-2-1	10VP030
C3	OPEN STATUS LOW	PIN 33 VAC-2-1	
A4	CLOSED STATUS HI	PIN 34 VAC-2-1	
C4	CLOSED STATUS LOW	PIN 33 VAC-2-1	
A5	OPEN STATUS HI	PIN 11 VAC-2-2	11VP027
C5	OPEN STATUS LOW	PIN 3 VAC-2-2	
A6	CLOSED STATUS HI	PIN 4 VAC-2-2	
C6	CLOSED STATUS LOW	PIN 3 VAC-2-2	
A7	OPEN STATUS HI	PIN 25 VAC-2-2	11VP034
C7	OPEN STATUS LOW	PIN 33 VAC-2-2	
A8	CLOSED STATUS HI	PIN 34 VAC-2-2	
C8	CLOSED STATUS LOW	PIN 33 VAC-2-2	
A9	OPEN STATUS HI	PIN 11 VAC-2-3	11VP037
C9	OPEN STATUS LOW	PIN 3 VAC-2-3	
A10	CLOSED STATUS HI	PIN 4 VAC-2-3	
C10	CLOSED STATUS LOW	PIN 3 VAC-2-3	
A11	OPEN STATUS HI	PIN 25 VAC-2-3	11VP039
C11	OPEN STATUS LOW	PIN 33 VAC-2-3	
A12	CLOSED STATUS HI	PIN 34 VAC-2-3	
C12	CLOSED STATUS LOW	PIN 33 VAC-2-3	
A13	OPEN STATUS HI	PIN 11 VAC-2-4	11VP059
C13	OPEN STATUS LOW	PIN 3 VAC-2-4	
A14	CLOSED STATUS HI	PIN 4 VAC-2-4	
C14	CLOSED STATUS LOW	PIN 3 VAC-2-4	
A15	OPEN STATUS HI	PIN 25 VAC-2-4	11VP061
C15	OPEN STATUS LOW	PIN 33 VAC-2-4	
A16	CLOSED STATUS HI	PIN 34 VAC-2-4	
C16	CLOSED STATUS LOW	PIN 33 VAC-2-4	
A17	OPEN STATUS HI	PIN 11 VAC-2-5	12VP039
C17	OPEN STATUS LOW	PIN 3 VAC-2-5	
A18	CLOSED STATUS HI	PIN 4 VAC-2-5	
C18	CLOSED STATUS LOW	PIN 3 VAC-2-5	
A19	OPEN STATUS HI	PIN 25 VAC-2-5	12VP041
C19	OPEN STATUS LOW	PIN 33 VAC-2-5	
A20	CLOSED STATUS HI	PIN 34 VAC-2-5	
C20	CLOSED STATUS LOW	PIN 33 VAC-2-5	
A21	OPEN STATUS HI	PIN 11 VAC-2-6	12VP166
C21	OPEN STATUS LOW	PIN 3 VAC-2-6	
A22	CLOSED STATUS HI	PIN 4 VAC-2-6	
C22	CLOSED STATUS LOW	PIN 3 VAC-2-6	
A23	OPEN STATUS HI	PIN 17 VAC-2-8	12VA162
C23	OPEN STATUS LOW	PIN 16 & 18 VAC-2-8	
A24	CLOSED STATUS HI	PIN 15 VAC-2-8	
C24	CLOSED STATUS LOW	PIN 16 & 17 VAC-2-8	
A25	OPEN STATUS HI	PIN 25 VAC-2-6	12VP168
C25	OPEN STATUS LOW	PIN 33 VAC-2-6	
A26	CLOSED STATUS HI	PIN 34 VAC-2-6	
C26	CLOSED STATUS LOW	PIN 33 VAC-2-6	
A27	OPEN STATUS HI	PIN 11 VAC-2-7	13VP239
C27	OPEN STATUS LOW	PIN 3 VAC-2-7	
A28	CLOSED STATUS HI	PIN 4 VAC-2-7	
C28	CLOSED STATUS LOW	PIN 3 VAC-2-7	
A29	OPEN STATUS HI	PIN 25 VAC-2-7	13VP241
C29	OPEN STATUS LOW	PIN 33 VAC-2-7	
A30	CLOSED STATUS HI	PIN 34 VAC-2-7	
C30	CLOSED STATUS LOW	PIN 33 VAC-2-7	
A31	OPEN STATUS HI	PIN 4 VAC-2-8	14VP239
C31	OPEN STATUS LOW	PIN 5 VAC-2-8	
A32	CLOSED STATUS HI	PIN 3 VAC-2-8	
C32	CLOSED STATUS LOW	PIN 5 VAC-2-8	

The following jumpers are installed:
J1, J3, J5, J7, J9, J11, J13, J15, J17, J19, J21, J23, J25, J27, J29, J31, J33, J35, J37, J39, J41, J43, J45, J47, J49, J51, J53, J55, J57, J59, J61, J63

U35
SW 1-3 OFF
SW 4-8 ON

U34
SW 1 OFF
SW 2-8 ON

J65 AM2 For Short Supervisory I/O Access or Short Nonprivileged I/O Access

INTERPRET IN GENERAL ACCORDANCE WITH ASME Y14.24M-1989	Q.A. CATEGORY A-3	DATE	BROOKHAVEN NATIONAL LABORATORY
	DRAWN BY Schoenfeld	11/13/04	UPTON, N.Y. 11973
UNLESS OTHERWISE SPECIFIED DIMENSIONS ARE IN INCHES	CHECKED BY		CONTROLS WIRING DIAGRAM
DECIMAL TOLERANCES .X ±.030 .XX ±.015 .XXX ±.005 ANGULAR TOLERANCE ± .5°	DESIGN APPROVAL		BLDG 901A, TALCOVE CFE-TALCOVE-VME
	ENGINEER APPROVAL		VMIC 1160A-403D WIRING (E)
	SURVEY APPROVAL		SIZE D — TALCOVE_HITL_25 — REV. A
NA FINISH	BREAK SHARP EDGES MAX. XX MIN. XX	NEXT ASSEMBLY	DRAWING NUMBER
OUTSTANDING ECN			MATERIAL: ——— SCALE: FULL WEIGHT: - SHEET 25

*AUTOCAD

Schoenfeld, Controls 11/8/2004 3:36 PM talcove_hitl_26.dwg

BT01 I/O PANEL

BLDG #: 901A
RACK #: R1
PANEL #: D

VMIC 2170A-210D (B)
BLDG #: 901A
RACK #: R2
CHASSIS ID: CFE-TALCOVE-VME
SLOT #: 9
A16 BASE ADDRESS: E104

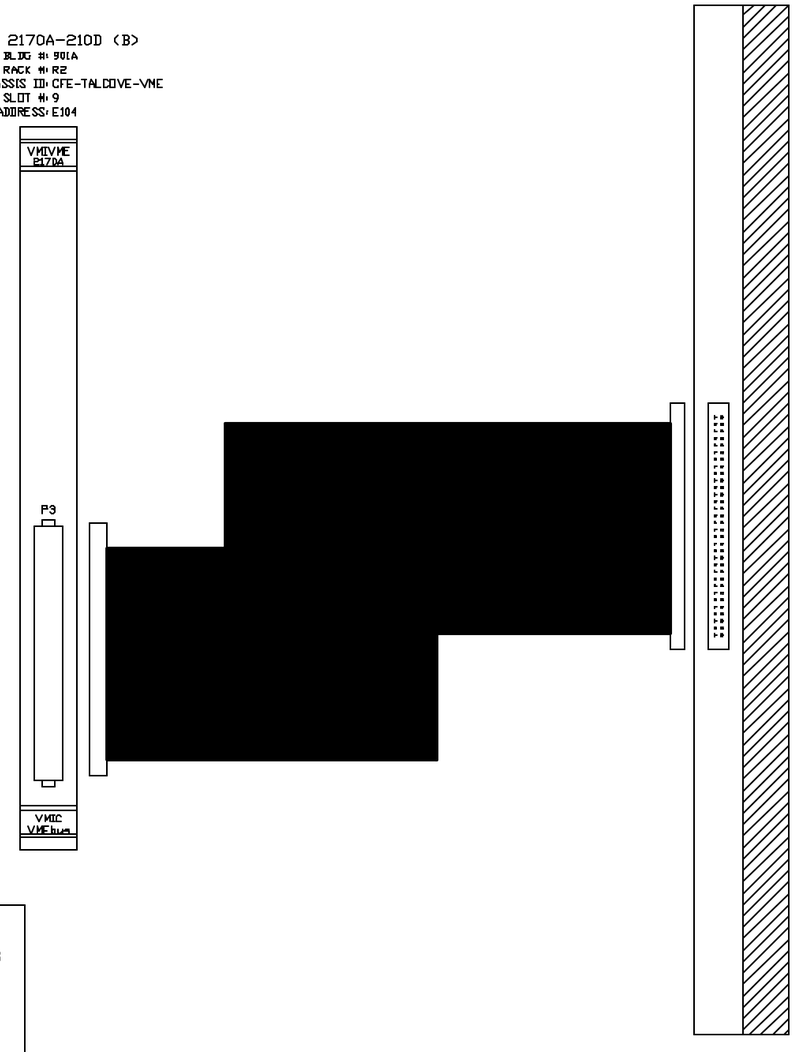

		TYPE OF SIGNAL	WAGO STRIP	NAME OF DEVICE
A1		HARP 1 CMD LOW	PIN 1 INST1-1	TTL.10MW020
C1		HARP 1 CMD HI	PIN 2 INST1-1 (5V POS)	
A2		FC 1 CMD LOW	PIN 3 INST1-1	TTL.10FC010
C2		FC 1 CMD HI	PIN 4 INST1-1 (5V POS)	
A3		HARP 2 CMD LOW	PIN 1 INST1-2	TTL.11MW010
C3		HARP 2 CMD HI	PIN 2 INST1-2 (5V POS)	
A4		FC 2 CMD LOW	PIN 3 INST1-3	TTL.11FC030
C4		FC 2 CMD HI	PIN 4 INST1-3 (5V POS)	
A5		HARP 3 CMD LOW	PIN 1 INST1-3	TTL.11MW030
C5		HARP 3 CMD HI	PIN 2 INST1-3 (5V POS)	
A6		FC 3 CMD LOW	PIN 3 INST1-5	TTL.11FC060
C6		FC 3 CMD HI	PIN 4 INST1-5 (5V POS)	
A7		HARP 4 CMD LOW	PIN 1 INST1-4	TTL.11MW040
C7		HARP 4 CMD HI	PIN 2 INST1-4 (5V POS)	
A8		FC 4 CMD LOW	PIN 3 INST1-7	TTL.11FC165
C8		FC 4 CMD HI	PIN 4 INST1-7 (5V POS)	
A9		HARP 5 CMD LOW	PIN 1 INST1-5	TTL.11MW060
C9		HARP 5 CMD HI	PIN 2 INST1-5 (5V POS)	
A10		FC 5 CMD LOW	PIN 3 INST1-8	TTL.13FC240
C10		FC 5 CMD HI	PIN 4 INST1-8 (5V POS)	
A11		HARP 6 CMD LOW	PIN 1 INST1-6	TTL.12MW030
C11		HARP 6 CMD HI	PIN 2 INST1-6 (5V POS)	
A12		FC 6 CMD LOW	N/A	
C12		FC 6 CMD HI	N/A	
A13		HARP 7 CMD LOW	PIN 1 INST1-7	TTL.12MW165
C13		HARP 7 CMD HI	PIN 2 INST1-7 (5V POS)	
A14		FC 7 CMD LOW	N/A	
C14		FC 7 CMD HI	N/A	
A15		HARP 8 CMD LOW	PIN 1 INST1-8	TTL.13MW240
C15		HARP 8 CMD HI	PIN 2 INST1-8 (5V POS)	
A16		HARP GAIN CMD LOW	PIN 1 8 PIN	
C16		HARP GAIN CMD HI	PIN 2 8 PIN (5V POS)	
A17		CUP/XFMR GAIN 1 CMD LOW	PIN 3 8 PIN	
C17		CUP/XFMR GAIN 1 CMD HI	PIN 4 8 PIN (5V POS)	
A18		MODE CMD LOW	V294 INPUT 3	TO SHEET 22
C18		MODE GAIN CMD HI	5 VOLT NEG	
A19		CUP/XFMR GAIN 2 CMD LOW	PIN 5 8 PIN	
C19		CUP/XFMR GAIN 2 CMD HI	PIN 6 8 PIN (5V POS)	
A20				
C20				
A21				
C21				
A22				
C22				
A23				
C23				
A24				
C24				
A25				
C25				
A26				
C26				
A27				
C27				
A28				
C28				
A29				
C29				
A30				
C30				
A31				
C31				
A32				
C32				

JUMPER SETTING:
ADDRESS: E104
A2=OUT
A3-A7=IN
A8=OUT
A9-A12=IN
A13-A15=OUT
JA1=OUT

REV.	ZONE	ECN NO.	DATE	BY	CKR	APP.

-3	-2	-1	REF DESIGNATION	ITEM NO.	DESCRIPTION	MFG. DWG NO./INS. NO.
QTY REQD						

INTERPRET IN GENERAL ACCORDANCE WITH ASME Y14.24M-1989
UNLESS OTHERWISE SPECIFIED DIMENSIONS ARE IN INCHES
DECIMAL TOLERANCES .X ±.030 .XX ±.015 .XXX ±.005 ANGULAR TOLERANCE ± .5°
NA FINISH
BREAK SHARP EDGES MAX. XX MIN. XX
OUTSTANDING ECN

Q.A. CATEGORY A-3
DRAWN BY Schoenfeld DATE 10/13/04
CHECKED BY
DESIGN APPROVAL
ENGINEER APPROVAL
SUPVR. APPROVAL
NEXT ASSEMBLY

BROOKHAVEN NATIONAL LABORATORY
UPTON, N.Y. 11973
CONTROLS WIRING DIAGRAM
BLDG 901A, TALCOVE CFE-TALCOVE-VME
VMIC 2170A-210D WIRING (B)

SIZE D
TALCOVE_HITL_26
DRAWING NUMBER
REV. A
MATERIAL: ——— SCALE: FULL WEIGHT: - SHEET 26

1 *AUTOCAD

Schoenfeld, Controls 11/8/2004 3:37 PM talcove_hitl_27.dwg

BT01 I/O PANEL

BLDG #: 901A
RACK #: R1
PANEL #: E

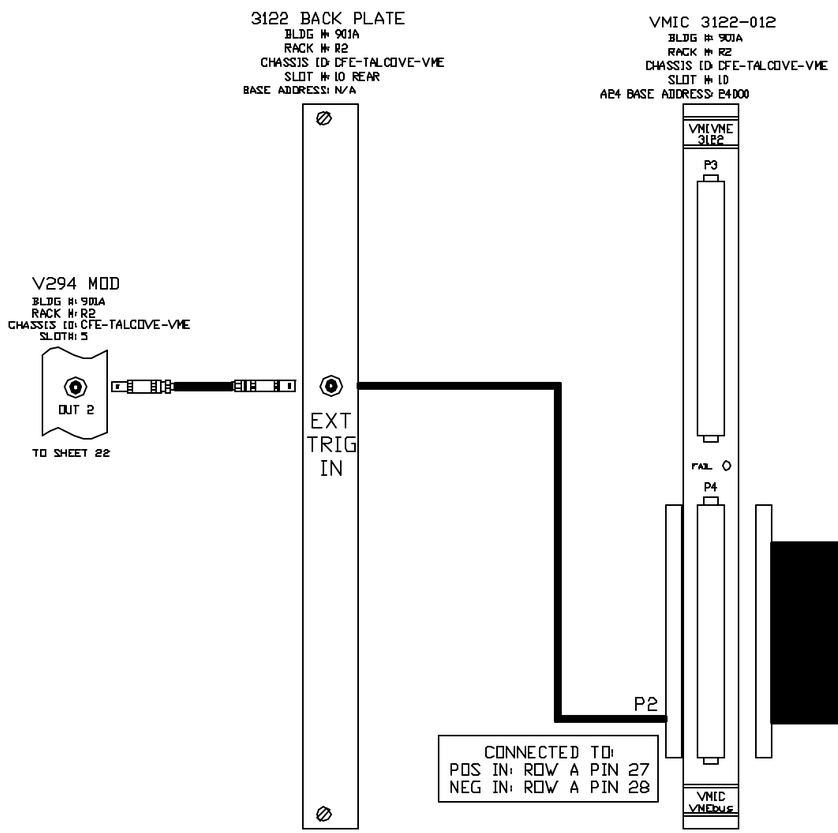

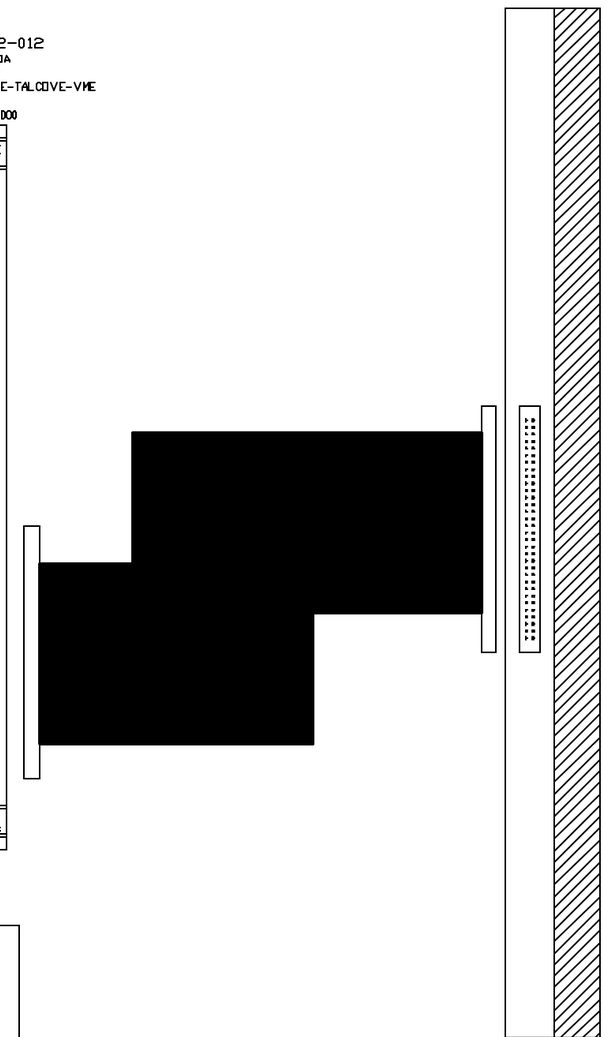

		TYPE OF SIGNAL	36 PIN J6 CONN FROM INSTR CHASSIS	NAME OF SIGNAL
A1	C1	HARP VOLTAGE HI HARP VOLTAGE LOW	PIN 1 CABLE J BLK PIN 32-34 CABLE J SHIELD	TTL.10MW020
A2	C2	HARP VOLTAGE HI HARP VOLTAGE LOW	PIN 2 CABLE J RED PIN 32-34 CABLE J SHIELD	TTL.11MW010
A3	C3	HARP VOLTAGE HI HARP VOLTAGE LOW	PIN 3 CABLE H BLK PIN 32-34 CABLE H SHIELD	TTL.11MW030
A4	C4	HARP VOLTAGE HI HARP VOLTAGE LOW	PIN 4 CABLE H RED PIN 32-34 CABLE H SHIELD	TTL.11MW040
A5	C5	HARP VOLTAGE HI HARP VOLTAGE LOW	PIN 5 CABLE M BLK PIN 32-34 CABLE M SHIELD	TTL.11MW060
A6	C6	HARP VOLTAGE HI HARP VOLTAGE LOW	PIN 6 CABLE M RED PIN 32-34 CABLE M SHIELD	TTL.12MW030
A7	C7	HARP VOLTAGE HI HARP VOLTAGE LOW	PIN 7 CABLE K BLK PIN 32-34 CABLE K SHIELD	TTL.12MW165
A8	C8	HARP VOLTAGE HI HARP VOLTAGE LOW	PIN 8 CABLE K RED PIN 32-34 CABLE K SHIELD	TTL.13MW240
A9	C9			
A10	C10			
A11	C11			
A12	C12			
A13	C13			
A14	C14			
A15	C15			
A16	C16			
A17	C17	CUP VOLTAGE HI CUP VOLTAGE LOW	PIN 9 CABLE N BLK PIN 32-34 CABLE N SHIELD	TTL.10FC010
A18	C18	CUP VOLTAGE HI CUP VOLTAGE LOW	PIN 10 CABLE N RED PIN 32-34 CABLE N SHIELD	TTL.11FC030
A19	C19	CUP VOLTAGE HI CUP VOLTAGE LOW	PIN 11 CABLE G BLK PIN 32-34 CABLE G SHIELD	TTL.11FC060
A20	C20	CUP VOLTAGE HI CUP VOLTAGE LOW	PIN 12 CABLE G RED PIN 32-34 CABLE G SHIELD	TTL.11FC165
A21	C21	CUP VOLTAGE HI CUP VOLTAGE LOW	PIN 13 CABLE L BLK PIN 32-34 CABLE L SHIELD	TTL.13FC240
A22	C22			
A23	C23			
A24	C24			
A25	C25	XFORMER VOLT HI XFORMER VOLT LOW	PIN 23 CABLE L RED PIN 32-34 CABLE L SHIELD	11XF055
A26	C26			
A27	C27			
A28	C28			
A29	C29			
A30	C30			
A31	C31			
A32	C32			

JUMPER SETTINGS
ADDRESS 24000
A12-A13=IN
A14=OUT
A15-A16=IN
A17=OUT
A18-A31=IN

REV.	ZONE	ECN NO.	DATE	BY	CKR	APP.

INTERPRET IN GENERAL ACCORDANCE WITH ASME Y14.24M-1989	Q.A. CATEGORY A-3		BROOKHAVEN NATIONAL LABORATORY UPTON, N.Y. 11973
UNLESS OTHERWISE SPECIFIED DIMENSIONS ARE IN INCHES	DRAWN BY Schoenfeld	DATE 11/8/04	CONTROLS WIRING DIAGRAM
DECIMAL TOLERANCES .X ±.030 .XX ±.015 .XXX ±.005 ANGULAR TOLERANCE ± .5°	CHECKED BY / DESIGN APPROVAL / ENGINEER APPROVAL / SURVEY APPROVAL		BLDG 901A, TALCOVE CFE-TALCOVE-VME
			3122 BREAKOUT WIRING
NA FINISH	BREAK SHARP EDGES MAX. XX MIN. XX	NEXT ASSEMBLY	SIZE D — TALCOVE_HITL_27 (DRAWING NUMBER) — REV. A
OUTSTANDING ECN			MATERIAL: ——— SCALE: FULL WEIGHT: - SHEET 27

*AUTOCAD

Schoenfeld, Controls 11/8/2004 3:37 PM talcove_hitl_28.dwg

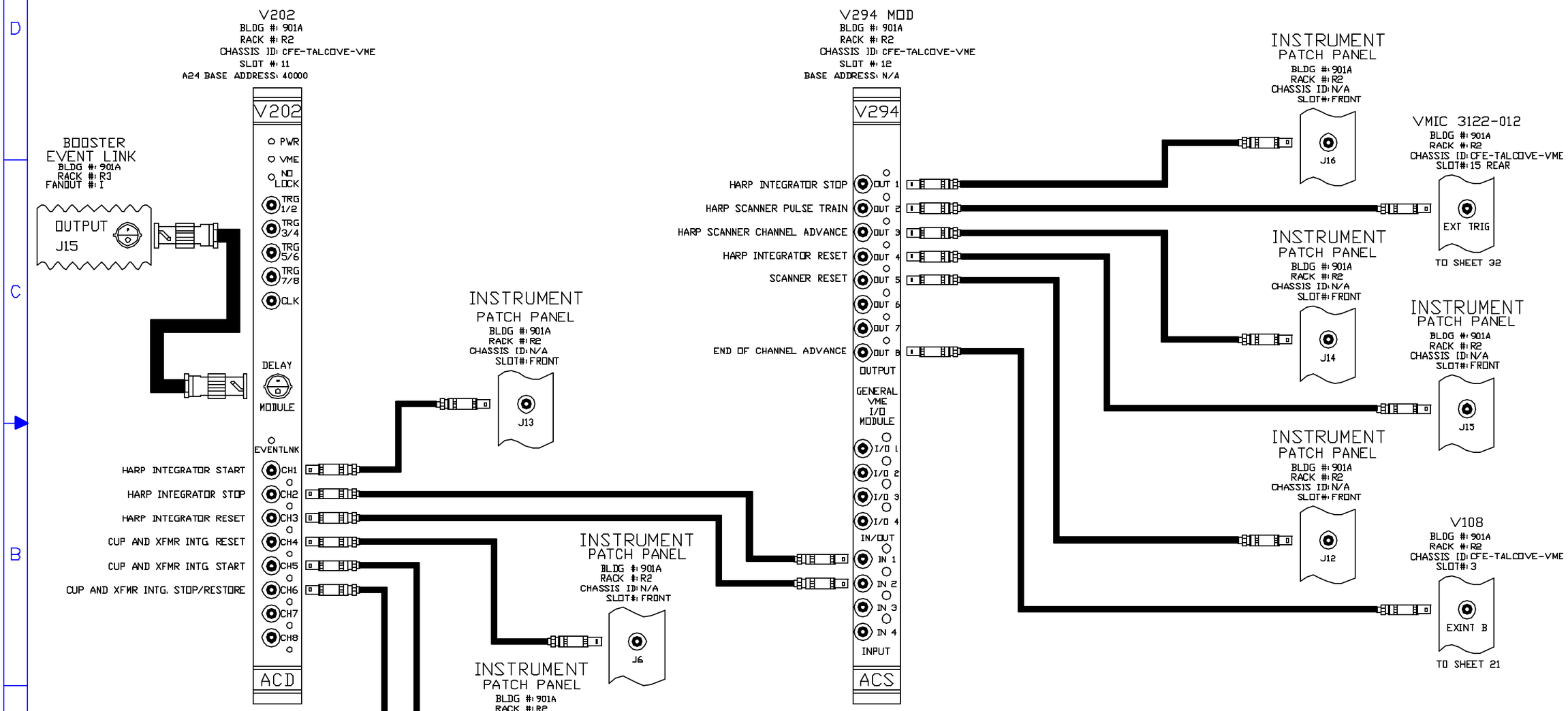

V202 JUMPER SETTINGS
A24 BASE ADDRESS
0X040000

SW1	JP1=IN
A16=0	JP2=PIN 1 TO 2
A17=0	JP3=IN
A18=1	JP4=OUT
A19=0	JP5=OUT
A20=0	JP6=OUT
A21=0	JP7=OUT
A22=0	JP8=OUT
A23=0	JP9=OUT
	JP10=IN
	JP11,12,13=IN

REV.	ZONE	ECN NO.	DATE	BY	CKR	APP.

INTERPRET IN GENERAL ACCORDANCE WITH ASME Y14.24M-1989	Q.A. CATEGORY A-3		DATE	BROOKHAVEN NATIONAL LABORATORY UPTON, N.Y. 11973
UNLESS OTHERWISE SPECIFIED DIMENSIONS ARE IN INCHES	DRAWN BY	Schoenfeld	11/13/04	C-A CONTROLS WIRING DIAGRAM
DECIMAL TOLERANCES .X ±.030 .XX ±.015 .XXX ±.005 ANGULAR TOLERANCE ± 5°	CHECKED BY			BLDG 901A, TALCOVE CFE-TALCOVE-VME
	DESIGN APPROVAL			V202 AND V294 WIRING DIAGRAM
	ENGINEER APPROVAL			
	SUPVR. APPROVAL			
OUTSTANDING ECN	NA	BREAK SHARP EDGES MAX. XX MIN. XX	NEXT ASSEMBLY	SIZE D — TALCOVE_HITL_28 — REV. A
				MATERIAL: — SCALE: FULL WEIGHT: - SHEET 28

*AUTOCAD

Schoenfeld, Controls 11/8/2004 3:37 PM talcove_hltl_29.dwg

VMIC 1160A-200D (A)
BLDG #: 901A
RACK #: R2
CHASSIS ID: CFE-TALCOVE-VME
SLOT #: 13
A16 BASE ADDRESS: E000

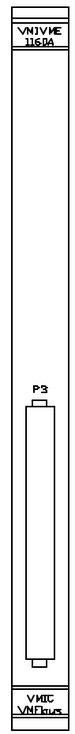

64 Pin Dsub breakout to terminal block

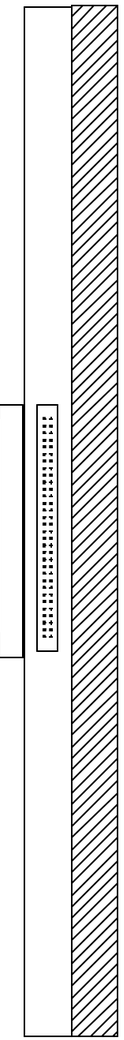

BT01 I/O PANEL
BLDG #: 901A
RACK #: R3
PANEL #: MP6 PANEL INPUT 1

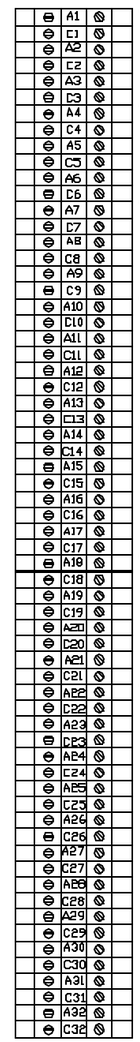

Pin	Signal	Device
A1	Out Status Hi	TTL.7MW020
C1	Out Status Lo	
A2	In Status Hi	
C2	In Status Lo	
A3	Rem/Loc Status Hi	
C3	Rem/Loc Status Lo	
A4	Out Status Hi	TTL.7MW0B3
C4	Out Status Lo	
A5	In Status Hi	
C5	In Status Lo	
A6	Rem/Loc Status Hi	
C6	Rem/Loc Status Lo	
A7	Out Status Hi	TTL.8MV078
C7	Out Status Lo	
A8	In Status Hi	
C8	In Status Lo	
A9	Rem/Loc Status Hi	
C9	Rem/Loc Status Lo	
A10	Out Status Hi	TTL.7FC020
C10	Out Status Lo	
A11	In Status Hi	
C11	In Status Lo	
A12	Rem/Loc Status Hi	
C12	Rem/Loc Status Lo	
A13	Hi Volt Status Hi	
C13	Hi Volt Status Lo	
A14	Out Status Hi	TTL.7FC0B3
C14	Out Status Lo	
A15	In Status Hi	
C15	In Status Lo	
A16	Rem/Loc Status Hi	
C16	Rem/Loc Status Lo	
A17	Hi Volt Status Hi	
C17	Hi Volt Status Lo	
A18	Out Status Hi	TTL.8FC078
C18	Out Status Lo	
A19	In Status Hi	
C19	In Status Lo	
A20	Rem/Loc Status Hi	
C20	Rem/Loc Status Lo	
A21	Hi Volt Status Hi	
C21	Hi Volt Status Lo	
A22		
C22		
A23		
C23		
A24		
C24		
A25		
C25		
A26		
C26		
A27		
C27		
A28		
C28		
A29		
C29		
A30		
C30		
A31		
C31		
A32		
C32		

The following jumpers are installed:
J1, J3, J5, J7, J9, J11, J13, J15, J17, J19, J21, J23, J25,
J27, J29, J31, J33, J35, J37, J39, J41, J43, J45, J47,
J49, J51, J53, J55, J57, J59, J61, J63

U35
SW 1-3 OFF
SW 4-8 ON

U34
SW 1-8 ON

J65 AM2 For Short Supervisory I/O Access or Short
Nonprivileged I/O/Access

REV.	ZONE	ECN NO.	DATE	BY	CKD	APP.

INTERPRET IN GENERAL ACCORDANCE WITH ASME Y14.24M-1989	Q.A. CATEGORY A-3	DATE	BROOKHAVEN NATIONAL LABORATORY UPTON, N.Y. 11973
UNLESS OTHERWISE SPECIFIED DIMENSIONS ARE IN INCHES	DRAWN BY SCHOENFELD	9/02/03	C-A CONTROLS WIRING DIAGRAM
DECIMAL TOLERANCES: .X ±.030 .XX ±.015 .XXX ±.005 ANGULAR TOLERANCE ± .5°	CHECKED BY		BLDG 901A, TALCOVE CFE-TALCOVE-VME
	DESIGN APPROVAL		VMIC 1160A-200D (A)
	ENGINEER APPROVAL		
	SURVEY APPROVAL		
NA FINISH	BREAK SHARP EDGES MAX. XX MIN. XX	NEXT ASSEMBLY	SIZE D — TALCOVE_HITL_29 — REV. A
OUTSTANDING ECN			MATERIAL: — SCALE: FULL WEIGHT: - SHEET 29

1 *AUTOCAD

Schoenfeld, Controls 11/8/2004 3:38 PM talcove_hitl_30.dwg

BT01 I/O PANEL

BLDG #:901A
RACK #:R3
PANEL #:MP6 PANEL INPUT 2

64 Pin Dsub breakout to terminal block

VMIVME 1160A-403 WAS REMOVED.
VACUUM READBACKS NOT CONNECTED.

A1	Out Status Hi		
C1	Out Status Lo	Vac Valve 1	TVC.6VA007
A2	In Status Hi		
C2	In Status Lo		
A3	Out Status Hi		
C3	Out Status Lo	Vac Valve 2	TVC.6VP019
A4	In Status Hi		
C4	In Status Lo		
A5	Out Status Hi		
C5	Out Status Lo	Vac Valve 3	TVC.7VP019
A6	In Status Hi		
C6	In Status Lo		
A7	Out Status Hi		
C7	Out Status Lo	Vac Valve 4	TVC.7VP021
A8	In Status Hi		
C8	In Status Lo		
A9	Out Status Hi		
C9	Out Status Lo	Vac Valve 5	TVC.7VP079
A10	In Status Hi		
C10	In Status Lo		
A11	Out Status Hi		
C11	Out Status Lo	Vac Valve 6	TVC.8VP005
A12	In Status Hi		
C12	In Status Lo		
A13	Out Status Hi		
C13	Out Status Lo	Vac Valve 7	TVC.8VP077
A14	In Status Hi		
C14	In Status Lo		
A15	Out Status Hi		
C15	Out Status Lo	Vac Valve 8	TVC.8VP081
A16	In Status Hi		
C16	In Status Lo		
A17	Out Status Hi		
C17	Out Status Lo	Vac Valve 9	TVC.9VP010
A18	In Status Hi		
C18	In Status Lo		
A19	Out Status Hi		
C19	Out Status Lo	Vac Valve 10	TVC.9VP015
A20	In Status Hi		
C20	In Status Lo		
A21			
C21			
A22			
C22			
A23			
C23			
A24			
C24			
A25			
C25			
A26			
C26			
A27			
C27			
A28			
C28			
A29			
C29			
A30			
C30			
A31			
C31			
A32			
C32			

REV.	ZONE	ECN NO.	DATE	BY	CKD	APP.

-3	-2	-1	REF DESIGNATION	ECN NO.	DESCRIPTION	MAT'L DFD NOLINK NO.
QTY REQD						

INTERPRET IN GENERAL ACCORDANCE WITH ASME Y14.24M-1989

UNLESS OTHERWISE SPECIFIED DIMENSIONS ARE IN INCHES

DECIMAL TOLERANCES
.X ±.030
.XX ±.015
.XXX ±.005
ANGULAR TOLERANCE ± .5°

NA FINISH

BREAK SHARP EDGES
MAX. XX MIN. XX

OUTSTANDING ECN

Q.A. CATEGORY A-3

		DATE
DRAWN BY	SCHOENFELD	9/02/03
CHECKED BY		
DESIGN APPROVAL		
ENGINEER APPROVAL		
SUPVR. APPROVAL		

NEXT ASSEMBLY

BROOKHAVEN NATIONAL LABORATORY
UPTON, N.Y. 11973

C-A CONTROLS WIRING DIAGRAM

BLDG 901A, TALCOVE

MP6 PANEL INPUT 2 (B)

SIZE D — DRAWING NUMBER TALCOVE_HITL_30 — REV. A

MATERIAL: ——— SCALE: FULL WEIGHT: – SHEET 30

1 *AUTOCAD

Schoenfeld, Controls 11/8/2004 3:38 PM talcove_hitl_31.dwg

REV.	ZONE	ECN NO.	DATE	BY	CKR	APP.

VMIC 2170A-210D (A)
BLDG #: 901A
RACK #: R2
CHASSIS ID: CFE-TALCOVE-VME
SLOT #: 9
A16 BASE ADDRESS: E100

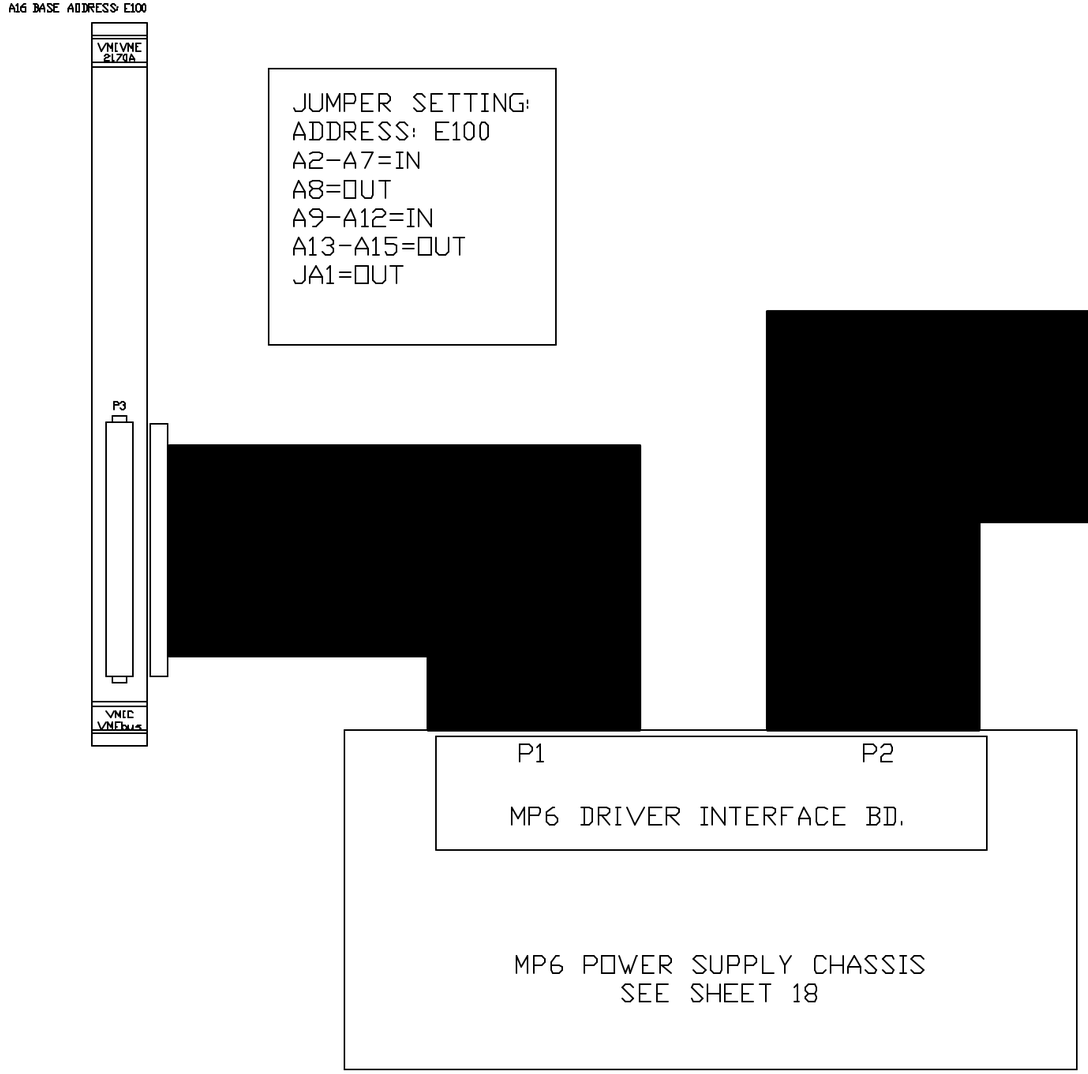

JUMPER SETTING:
ADDRESS: E100
A2-A7=IN
A8=OUT
A9-A12=IN
A13-A15=OUT
JA1=OUT

BT01 I/O PANEL
BLDG #:901A
RACK #:R1
PANEL #:MP6 PANEL OUTPUT 1

		TYPE OF SIGNAL	NAME OF DEVICE
A1		HARP 1 CMD LOW	TTL.7MW020
C1		HARP 1 CMD HI	
A2		FC 1 CMD LOW	TTL.7MW083
C2		FC 1 CMD HI	
A3		HARP 2 CMD LOW	TTL.8MW078
C3		HARP 2 CMD HI	
A4		FC 2 CMD LOW	TTL.7FC020
C4		FC 2 CMD HI	
A5		HARP 3 CMD LOW	TTL.7FC083
C5		HARP 3 CMD HI	
A6		FC 3 CMD LOW	TTL.8FC078
C6		FC 3 CMD HI	
A7		HARP MP6 GAIN CMD LOW	
C7		HARP MP6 GAIN CMD HI	
A8		CUP/XFMR MP6 GAIN 1 CMD LOW	
C8		CUP/XFMR MP6 GAIN 1 CMD HI	
A9			
C9			
A10		MODE MP6 CMD LOW	
C10		MODE MP6 CMD HI	
A11			
C11			
A12			
C12			
A13			
C13			
A14			
C14			
A15			
C15			
A16			
C16			
A17			
C17			
A18			
C18			
A19			
C19			
A20			
C20			
A21			
C21			
A22			
C22			
A23			
C23			
A24			
C24			
A25		CUP/XFMR MP6 GAIN 2 CMD LOW	
C25		CUP/XFMR MP6 GAIN 2 CMD HI	
A26			
C26			
A27			
C27			
A28			
C28			
A29			
C29			
A30			
C30			
A31			
C31			
A32			
C32			

-3	-2	-1	REF DESIGNATION	ITEM NO.	DESCRIPTION	MAT'L DATA HOLDING NO.
QTY REQD						

INTERPRET IN GENERAL ACCORDANCE WITH ASME Y14.24M-1989
UNLESS OTHERWISE SPECIFIED DIMENSIONS ARE IN INCHES
DECIMAL TOLERANCES: .X ±.030, .XX ±.015, .XXX ±.005
ANGULAR TOLERANCE ± .5°
NA FINISH
BREAK SHARP EDGES MAX. XX MIN. XX
OUTSTANDING ECN

Q.A. CATEGORY A-3
DRAWN BY Schoenfeld DATE 10/19/04
CHECKED BY
DESIGN APPROVAL
ENGINEER APPROVAL
SUPVR. APPROVAL
NEXT ASSEMBLY

BROOKHAVEN NATIONAL LABORATORY
UPTON, N.Y. 11973
CONTROLS WIRING DIAGRAM
BLDG 901A, TALCOVE CFE-TALCOVE-VME
VMIC 2170A-210D WIRING (A)
SIZE D
TALCOVE_HITL_31
DRAWING NUMBER
REV. A
MATERIAL: ——— SCALE: FULL WEIGHT: - SHEET 31

*AUTOCAD

Schoenfeld, Controls 11/8/2004 3:38 PM talcove_hitl_32.dwg

BT01 I/O PANEL

BLDG #: 901A
RACK #: R2
PANEL #: F

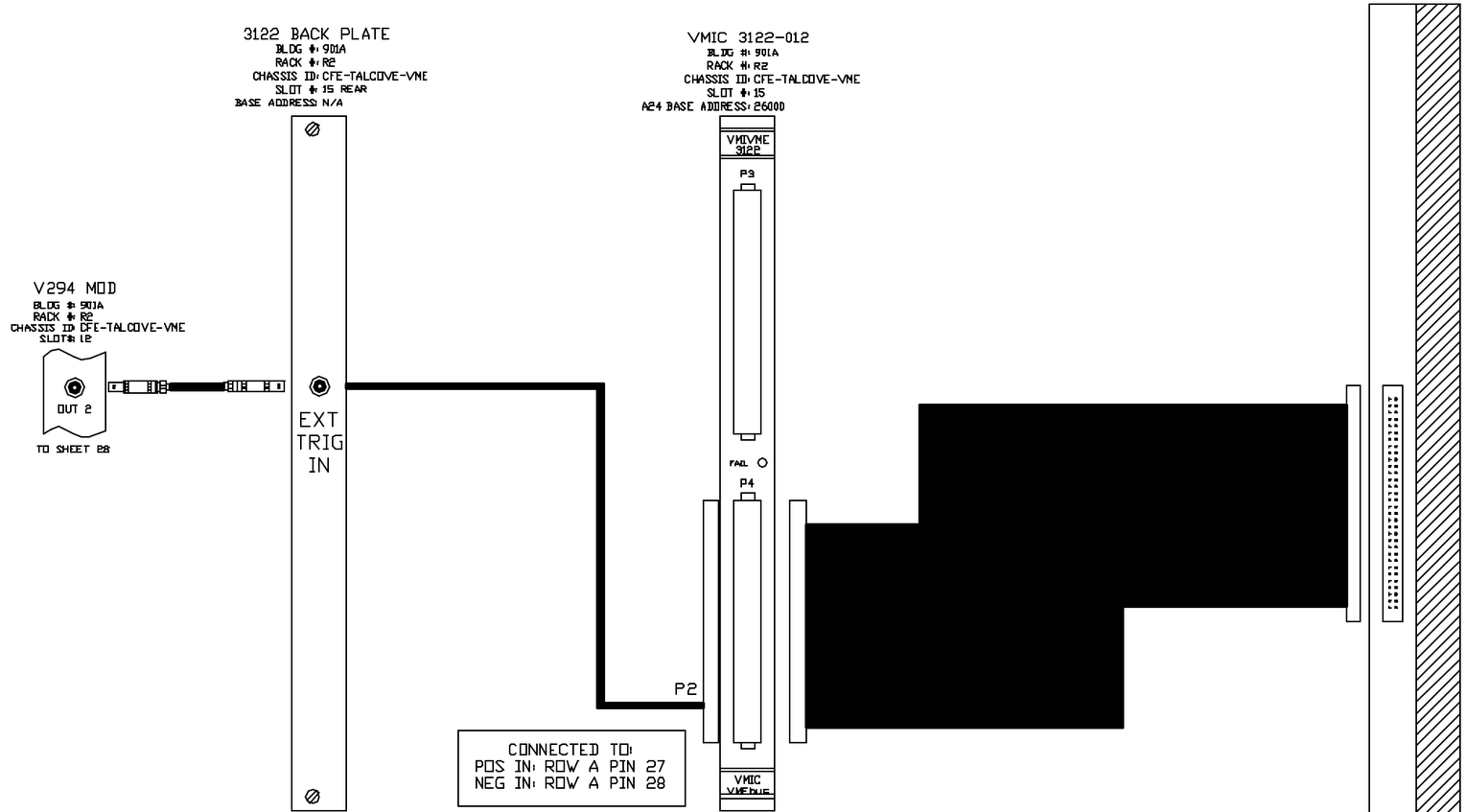

JUMPER SETTINGS
ADDRESS 26000

A12-A13=IN
A14-A15=OUT
A16=IN
A17=OUT
A18-A31=IN

		TYPE OF SIGNAL	NAME OF SIGNAL
A1		HARP VOLTAGE HI	TTL.7MW020
C1		HARP VOLTAGE LOW	
A2		HARP VOLTAGE HI	TTL.7MW083
C2		HARP VOLTAGE LOW	
A3		HARP VOLTAGE HI	TTL.8MW078
C3		HARP VOLTAGE LOW	
A4			
C4			
A5			
C5			
A6			
C6			
A7			
C7			
A8			
C8			
A9			
C9			
A10			
C10			
A11			
C11			
A12			
C12			
A13			
C13			
A14			
C14			
A15			
C15			
A16			
C16			
A17		CUP VOLTAGE HI	TTL.7FC020
C17		CUP VOLTAGE LOW	
A18		CUP VOLTAGE HI	TTL.7FC083
C18		CUP VOLTAGE LOW	
A19		CUP VOLTAGE HI	TTL.8FC078
C19		CUP VOLTAGE LOW	
A20			
C20			
A21			
C21			
A22			
C22			
A23			
C23			
A24			
C24			
A25		XFORMER VOLT HI	5XF
C25		XFORMER VOLT LOW	
A26		XFORMER VOLT HI	6XF
C26		XFORMER VOLT LOW	
A27		XFORMER VOLT HI	8XF065
C27		XFORMER VOLT LOW	
A28			
C28			
A29			
C29			
A30			
C30			
A31			
C31			
A32			
C32			

INTERPRET IN GENERAL ACCORDANCE WITH ASME Y14.24M-1989	Q.A. CATEGORY A-3	DATE	BROOKHAVEN NATIONAL LABORATORY
	DRAWN BY Schoenfeld	11/8/04	UPTON, N.Y. 11973
UNLESS OTHERWISE SPECIFIED DIMENSIONS ARE IN INCHES	CHECKED BY		CONTROLS WIRING DIAGRAM
DECIMAL TOLERANCES: .X ±.030 .XX ±.015 .XXX ±.005 ANGULAR TOLERANCE ± .5°	DESIGN APPROVAL		BLDG 901A, TALCOVE CFE-TALCOVE-VME
	ENGINEER APPROVAL		3122 BREAKOUT WIRING
	SUPVR. APPROVAL		SIZE D — TALCOVE_HITL_32 — REV. A
NA FINISH	BREAK SHARP EDGES MAX. XX MIN. XX	NEXT ASSEMBLY	DRAWING NUMBER
OUTSTANDING ECN			MATERIAL: — SCALE: FULL WEIGHT: - SHEET 32

*AUTOCAD

Schoenfeld, Controls 11/8/2004 3:39 PM talcove_hitl_33.dwg

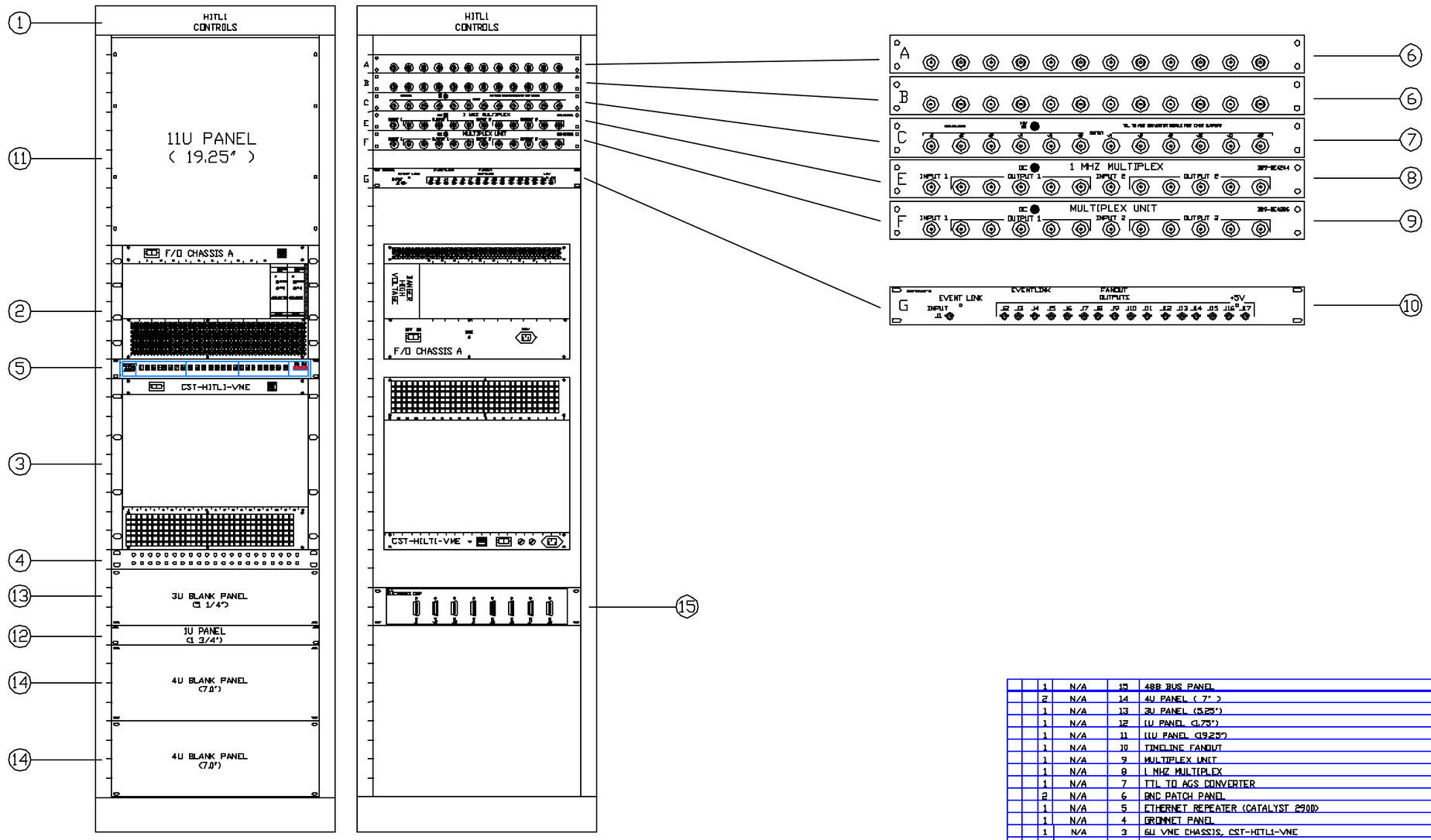

		1	N/A	15	488 BUS PANEL	
		2	N/A	14	4U PANEL (7")	A-49507
		1	N/A	13	3U PANEL (5.25")	XXXXX
		1	N/A	12	1U PANEL (1.75")	
		1	N/A	11	11U PANEL (19.25")	
		1	N/A	10	TIMELINE FANOUT	D019-E2442
		1	N/A	9	MULTIPLEX UNIT	D019-0E4286
		1	N/A	8	1 MHZ MULTIPLEX	D019-0E4244
		1	N/A	7	TTL TO AGS CONVERTER	N/A
		2	N/A	6	BNC PATCH PANEL	N/A
		1	N/A	5	ETHERNET REPEATER (CATALYST 2900)	N/A
		1	N/A	4	GROMMET PANEL	N/A
		1	N/A	3	6U VME CHASSIS, CST-HITL1-VME	N/A
		1	N/A	2	F/O CHASSIS	N/A
		1	HITL 1	1	19" RACK	N/A
-3	-2	-1	REF DESIGNATOR	ITEM NO.	DESCRIPTION	NAT'L DWG ASUM. NO.
QTY REQD						

INTERPRET IN GENERAL ACCORDANCE WITH ASME Y14.24M-1989

UNLESS OTHERWISE SPECIFIED DIMENSIONS ARE IN INCHES

DECIMAL TOLERANCES
.X ±.030
.XX ±.015
.XXX ±.005
ANGULAR TOLERANCE ± .5°

NA FINISH

BREAK SHARP EDGES
MAX. XX MIN. XX

OUTSTANDING ECN

Q.A. CATEGORY A-3

		DATE
DRAWN BY	Schoenfeld	11/8/04
CHECKED BY		
DESIGN APPROVAL		
ENGINEER APPROVAL		
SUPVR. APPROVAL		

NEXT ASSEMBLY

BROOKHAVEN NATIONAL LABORATORY
UPTON, N.Y. 11973

RACK LAYOUT FOR HITL1
CONTROL SYSTEM
HITL1 CONTROLS RACK

SIZE D | TALCOVE_HITL_33 | REV. A
DRAWING NUMBER

MATERIAL: ——— SCALE: FULL WEIGHT: - SHEET 33

*AUTOCAD

Schoenfeld, Controls 11/8/2004 3:40 PM talcove_hitl_34.dwg

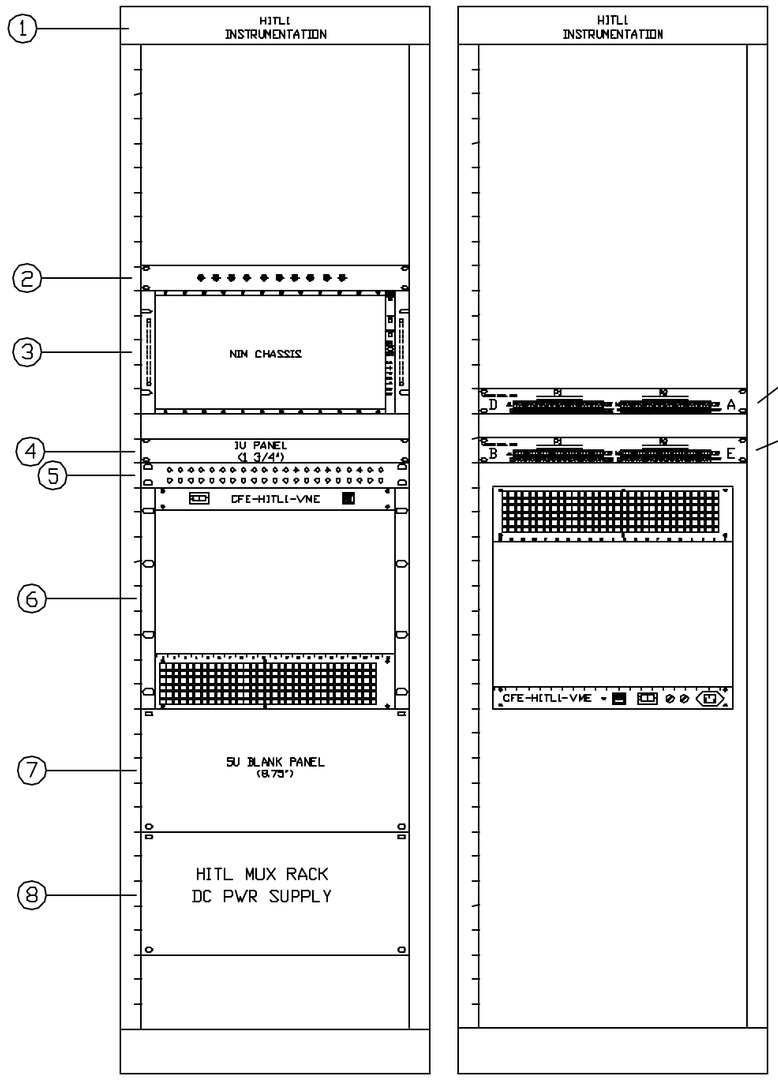

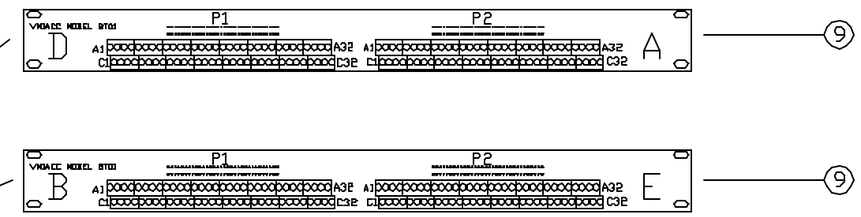

		2	N/A	9	BT01 INTERFACE PANEL	
		1	N/A	8	HITL MUX RACK DC PWR SUPPLY	
		2	N/A	7	5U PANEL (8.75")	
		1	N/A	6	VME CHASSIS CFE-HITL1-VME	N/A
		1	N/A	5	GROMMET PANEL	N/A
		1	N/A	4	1U PANEL (1.75")	
		1	N/A	3	INSTRUMENTATION NIM CHASSIS	N/A
		1	N/A	2	10 BNC PATCH PANEL	N/A
		1	HITL 1	1	19" RACK	N/A
-3	-2	-1	REF DESIGNATOR	ITEM NO.	DESCRIPTION	MFG. DWG NO./NAME NO.
QTY REQD						

INTERPRET IN GENERAL ACCORDANCE WITH ASME Y14.24M-1989

UNLESS OTHERWISE SPECIFIED DIMENSIONS ARE IN INCHES

DECIMAL TOLERANCES
.X ±.030
.XX ±.015
.XXX ±.005
ANGULAR TOLERANCE ±.5°

NA FINISH

BREAK SHARP EDGES
MAX. XX MIN. XX

OUTSTANDING ECN

Q.A. CATEGORY A-3

		DATE
DRAWN BY	Schoenfeld	11/8/04
CHECKED BY		
DESIGN APPROVAL		
ENGINEER APPROVAL		
SUPVR. APPROVAL		

NEXT ASSEMBLY

BROOKHAVEN NATIONAL LABORATORY
UPTON, N.Y. 11973

RACK LAYOUT FOR HITL1
CONTROL SYSTEM
HITL1 INSTRUMENTATION RACK

SIZE D | TALCOVE_HITL_34 | REV. A
DRAWING NUMBER

MATERIAL: ——— SCALE: FULL WEIGHT: - SHEET 34

*AUTOCAD

Schoenfeld, Controls 11/8/2004 3:40 PM talcove_hitl_35.dwg

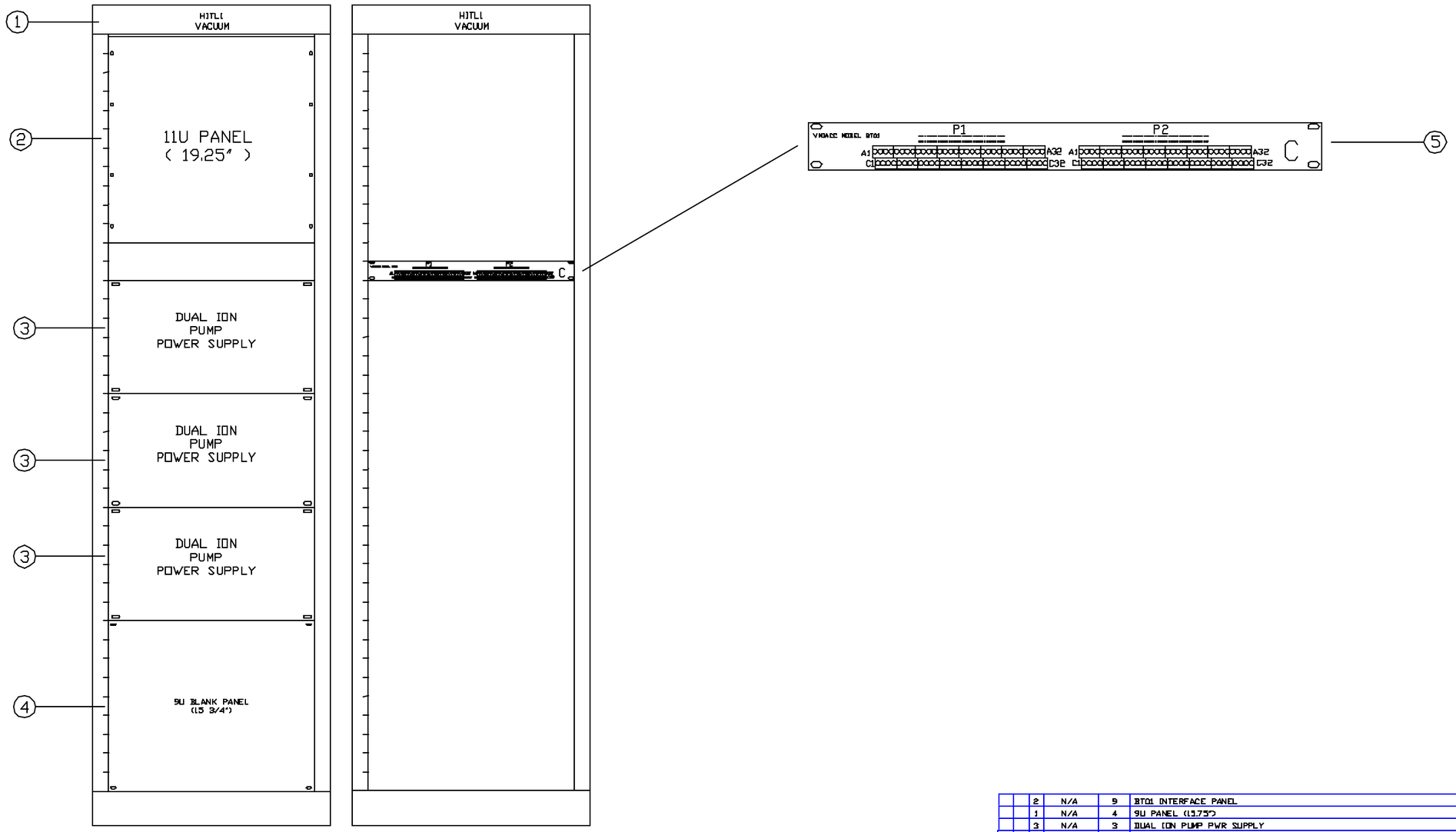

FRONT VIEW

REAR VIEW

-3	-2	-1	REF DESIGNATION	ITEM NO.	DESCRIPTION	MFG. DWG NO./INL NO.
		2	N/A	9	BT01 INTERFACE PANEL	
		1	N/A	4	9U PANEL (13.75")	
		3	N/A	3	DUAL ION PUMP PWR SUPPLY	N/A
		1	N/A	2	11U PANEL (19.25")	N/A
		1	HITL 1	1	19" RACK	N/A

QTY REQD

INTERPRET IN GENERAL ACCORDANCE WITH ASME Y14.24M-1989

UNLESS OTHERWISE SPECIFIED DIMENSIONS ARE IN INCHES

DECIMAL TOLERANCES
.X ±.030
.XX ±.015
.XXX ±.005
ANGULAR TOLERANCE ± .5°

NA FINISH

BREAK SHARP EDGES
MAX. XX MIN. XX

OUTSTANDING ECN

Q.A. CATEGORY A-3

		DATE
DRAWN BY	Schoenfeld	11/23/04
CHECKED BY		
DESIGN APPROVAL		
ENGINEER APPROVAL		
SUPVR. APPROVAL		

NEXT ASSEMBLY

BROOKHAVEN NATIONAL LABORATORY
UPTON, N.Y. 11973

RACK LAYOUT FOR HITL1
CONTROL SYSTEM
HITL1 VACUUM RACK

SIZE D
TALCOVE_HITL_35
DRAWING NUMBER
REV. A

MATERIAL: ——— SCALE: FULL WEIGHT: – SHEET 35

1 *AUTOCAD

REV.	ZONE	ECN NO.	DATE	BY	CKR	APP.

Schoenfeld, Controls 11/8/2004 3:41 PM talcove_hitl_36.dwg

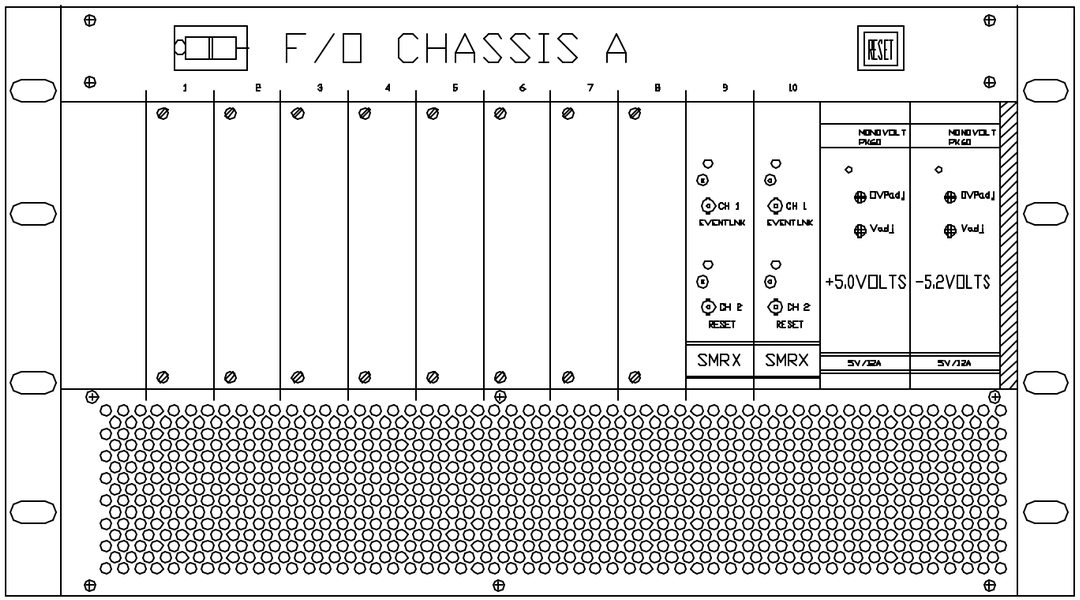

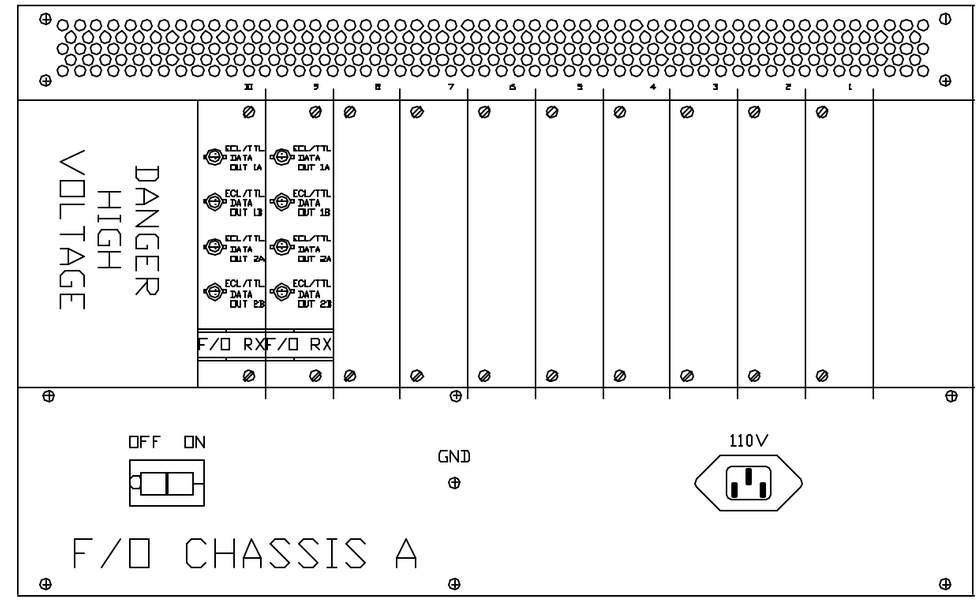

NOTE 1: FILLER PANELS FOR UNUSED SLOTS

-3	-2	-1	REF DESIGNATOR	ITEM NO.	DESCRIPTION	MAT'L DWG NO./MFR. NO.
		LB	NOTE 1	6	3U X 6HP BLANK PANEL	ESFE-3032
		1	SLOT 12	5	NONOVOLT P.S. -5.2V	X
		1	SLOT 11	4	NONOVOLT P.S. +5V	X
		2	SLOT 9, 10	3	3U FIBER OPTIC TRANSITION MODULE (TTL)	DD9-E2542
		2	SLOT 9, 10	2	3U FIBER OPTIC SINGLE MODE RECEIVER	94028101
		1	N/A	1	3U FIBER OPTIC CHASSIS	94028261

QTY REQD

INTERPRET IN GENERAL ACCORDANCE WITH ASME Y14.24M-1989

UNLESS OTHERWISE SPECIFIED DIMENSIONS ARE IN INCHES

DECIMAL TOLERANCES
.X ±.030
.XX ±.015
.XXX ±.005
ANGULAR TOLERANCE ± .5°

NA FINISH

BREAK SHARP EDGES MAX. XX MIN. XX

OUTSTANDING ECN

Q.A. CATEGORY A-3

		DATE
DRAWN BY	Schoenfeld	11/29/04
CHECKED BY		
DESIGN APPROVAL		
ENGINEER APPROVAL		
SURVEY. APPROVAL		

NEXT ASSEMBLY

BROOKHAVEN NATIONAL LABORATORY
ASSOCIATED UNIVERSITIES, INC.
UPTON, N.Y. 11973

CONTROLS WIRING DIAGRAM

BLDG HITL1

FIBER FANOUT CHASSIS

SIZE D — TALCOVE_HITL_36 — REV. A

DRAWING NUMBER

MATERIAL: ——— SCALE: FULL WEIGHT: - SHEET 36

*AUTOCAD

Schoenfeld, Controls 11/8/2004 3:41 PM talcove_hitl_37.dwg

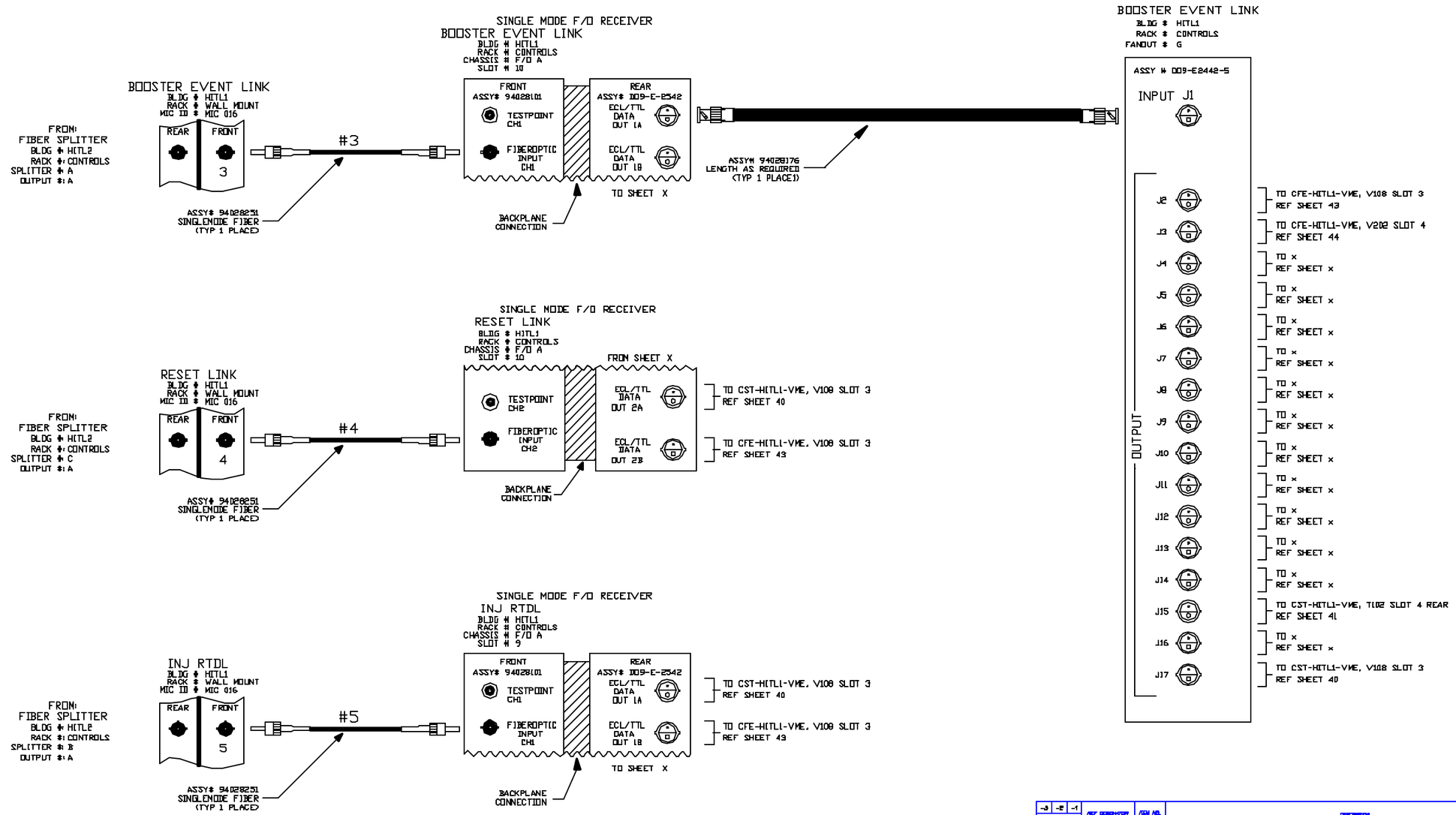

-3 -2 -1 QTY REQD	REF DESIGNATION	ITEM NO.	DESCRIPTION		MAT'L DWG NO.(NO. NO.)
	INTERPRET IN GENERAL ACCORDANCE WITH ASME Y14.24M-1989	Q.A. CATEGORY A-3		DATE	BROOKHAVEN NATIONAL LABORATORY ASSOCIATED UNIVERSITIES, INC. UPTON, N.Y. 11973
		DRAWN BY	Schoenfeld	11/5/04	
	UNLESS OTHERWISE SPECIFIED DIMENSIONS ARE IN INCHES	CHECKED BY			CONTROLS WIRING DIAGRAM
	DECIMAL TOLERANCES: .X ±.030 .XX ±.015 .XXX ±.005 ANGULAR TOLERANCE ± .5°	DESIGN APPROVAL			BLDG HITL1
		ENGINEER APPROVAL	R. MICHNOFF	5/13/97	BOOSTER EVENT LINK
		SUPVR. APPROVAL			
	NA FINISH	BREAK SHARP EDGES MAX. XX MIN. XX	NEXT ASSEMBLY	SIZE D	TALCOVE_HITL_37 REV. A
OUTSTANDING ECN				MATERIAL: ———	SCALE: NA WEIGHT: - SHEET 37

*AUTOCAD

REV.	ZONE	ECN NO.	DATE	BY	CKR	APP.

Schoenfeld, Controls 11/8/2004 3:41 PM talcove_hitl_38.dwg

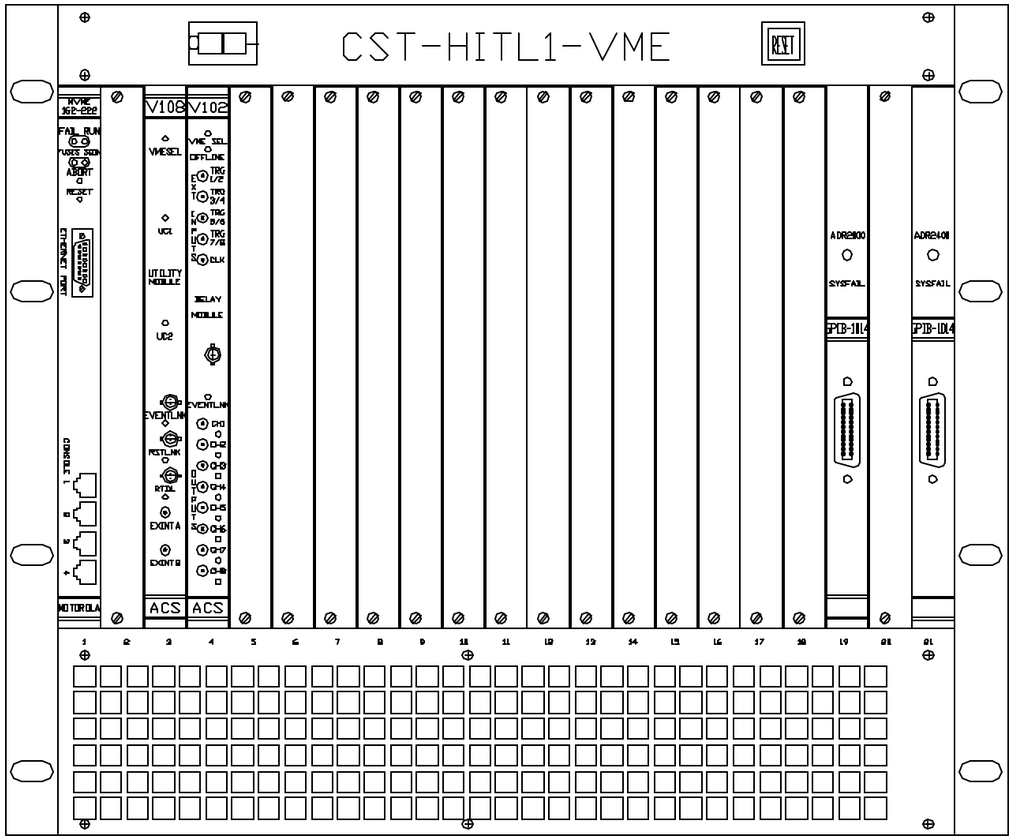

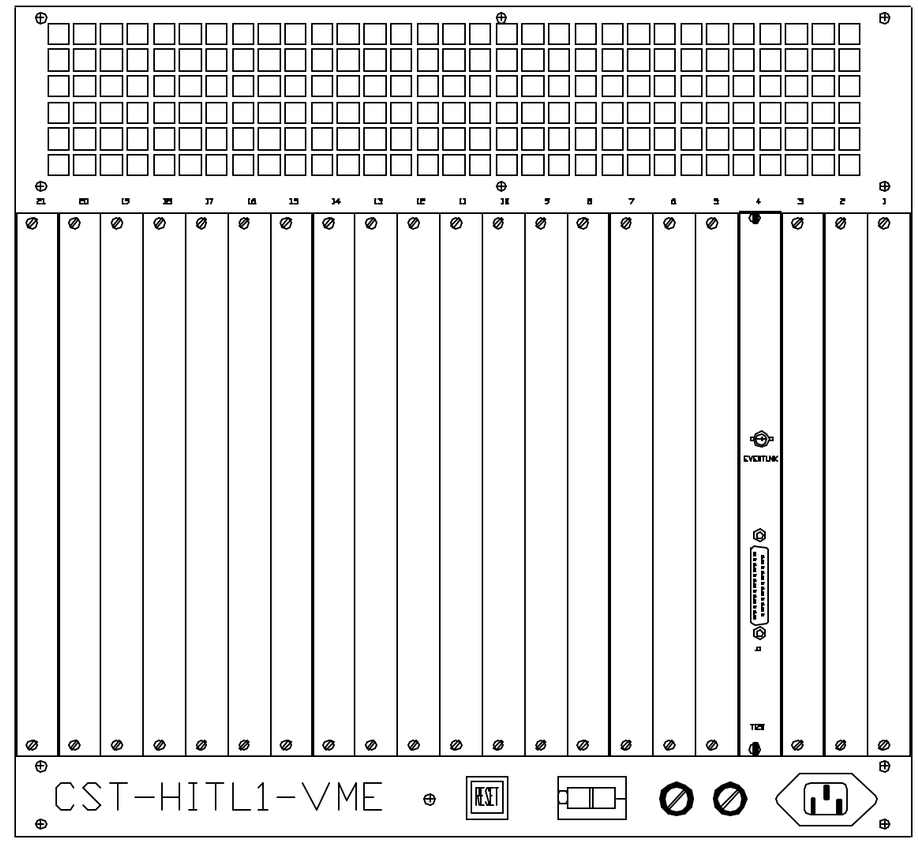

NOTE 1: FOR UNUSED SLOTS

QTY REQD -3	QTY REQD -2	QTY REQD -1	REF DESIGNATOR	ITEM NO.	DESCRIPTION	MAT'L DWG NO./INT. NO.
		X	X	X	X	X
		35	NOTE 1	8	6U FILLER PANELS	X
		2	SLOTS 4,5	7	T120 TRANSITION MODULE	X
		2	SLOTS 20,21	6	GPIB IOC4	X
		X	X	X	X	X
		1	SLOT 4	4	V102 DECODER MODULE	94028070
		1	SLOT 3	3	V108 UTILITY MODULE	94028094
		1	SLOT 1	2	FRONT END COMPUTER (162-222)	X
		1	N/A	1	6U VME CHASSIS	RHIC-93008100

INTERPRET IN GENERAL ACCORDANCE WITH ASME Y14.24M-1989

UNLESS OTHERWISE SPECIFIED DIMENSIONS ARE IN INCHES

DECIMAL TOLERANCES
.X ± .030
.XX ± .015
.XXX ± .005
ANGULAR TOLERANCE ± .5°

NA FINISH

BREAK SHARP EDGES MAX. XX MIN. XX

OUTSTANDING ECN

Q.A. CATEGORY A-3

		DATE
DRAWN BY	Schoenfeld	11/15/04
CHECKED BY		
DESIGN APPROVAL		
ENGINEER APPROVAL		
SUPVR. APPROVAL		

NEXT ASSEMBLY

BROOKHAVEN NATIONAL LABORATORY
ASSOCIATED UNIVERSITIES, INC.
UPTON, N.Y. 11973

CONTROLS WIRING DIAGRAM

BLDG HITL1

CST-HILT1-VME

SIZE D

TALCOVE_HITL_38

DRAWING NUMBER

REV.

MATERIAL: ——— SCALE: WEIGHT: SHEET 38

*AUTOCAD

Schoenfeld, Controls 11/8/2004 3:42 PM talcove_hitl_39.dwg

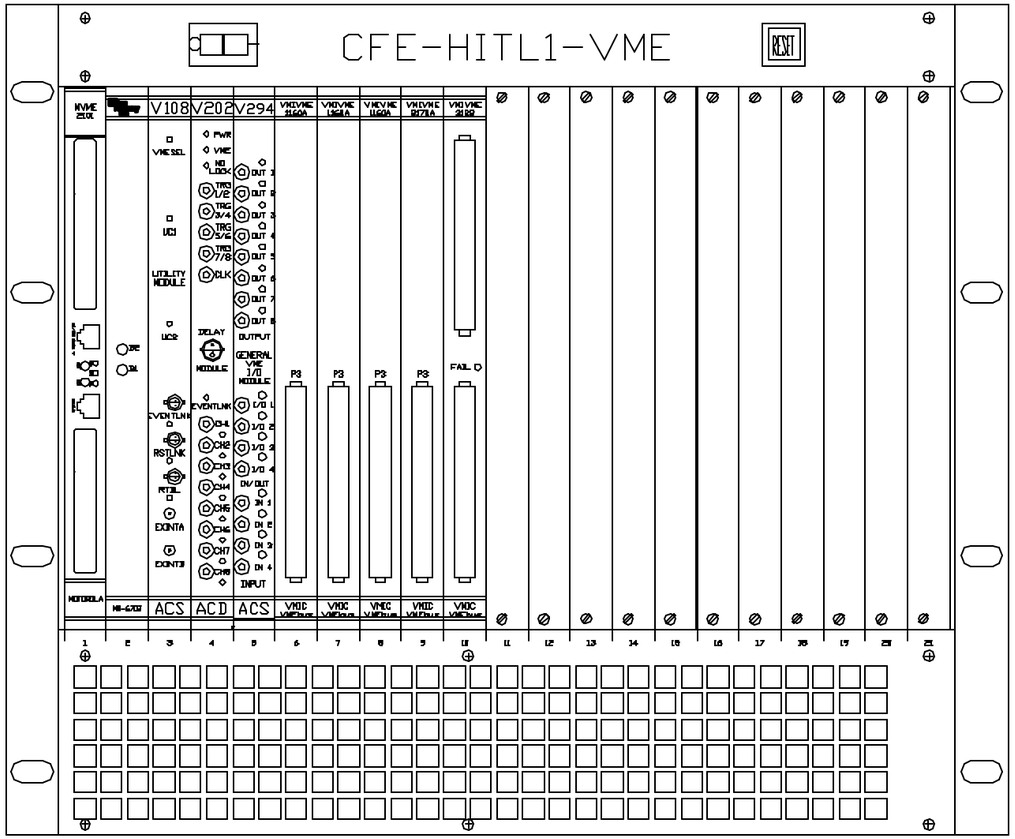

FRONT VIEW

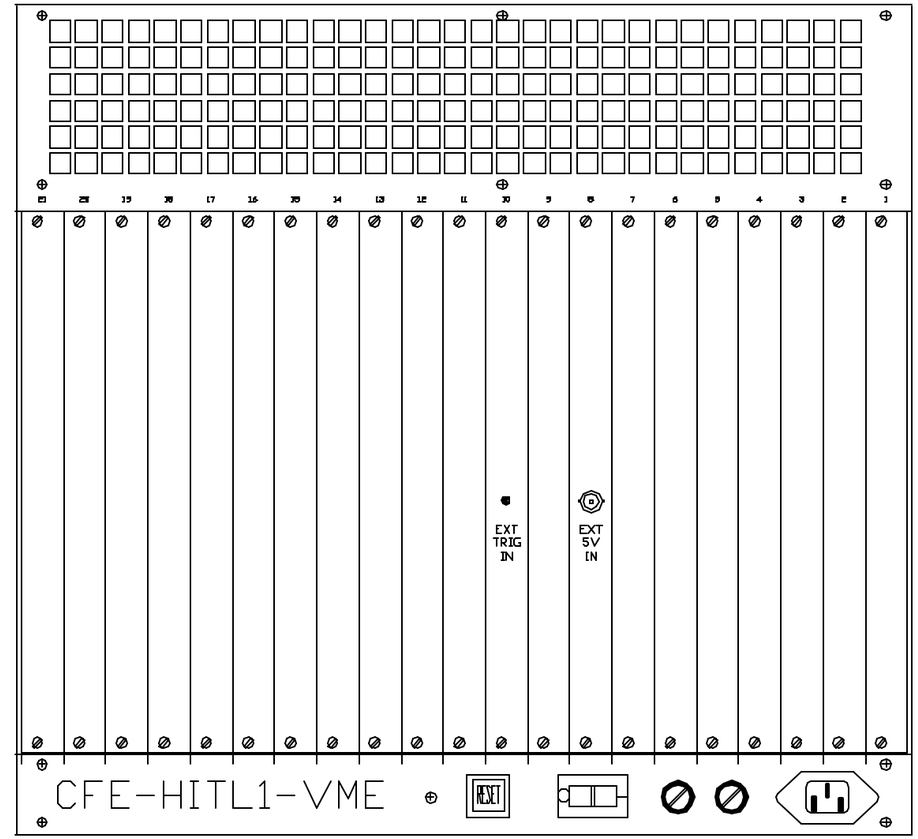

REAR VIEW

NOTE:

1. ALL UNUSED SLOTS, FRONT AND REAR

		30	see note 1	11	VME BLANK PANEL (ELECTRO SPACE ESFE-29B50)	
		1	SLOT 10	10	VMIVME 3122-01E 16 BIT ADC	
		1	SLOT 9	9	VMIVME 2170A-P10D DIGITAL OUTPUT	
		1	SLOT 8	8	VMIVME 1160A-403D DIGITAL INPUT	
		2	SLOT 6,7	7	VMIVME 1160A-2001 DIGITAL INPUT	
		1	SLOT 5	6	V294 GEN I/O MODULE	
		1	SLOT 4	5	V202 EVENT DELAY MODULE	
		1	SLOT 3	4	V108 UTILITY MODULE	94028094
		1	SLOT 2	3	NM-6702C MEMORY MODULE	
		1	SLOT 1	2	FRONT END COMPUTER	NVME2101-1
		1	N/A	1	VME CHASSIS	RHIC-93008000
-3	-2	-1	REF DESIGNATOR	ITEM NO.	DESCRIPTION	MFG. DWG NO.&NO.
QTY REQD						

INTERPRET IN GENERAL ACCORDANCE WITH ASME Y14.24M-1989

UNLESS OTHERWISE SPECIFIED DIMENSIONS ARE IN INCHES

DECIMAL TOLERANCES
.X ± .030
.XX ± .015
.XXX ± .005
ANGULAR TOLERANCE ± 5°

OUTSTANDING ECN

NA / FINISH

BREAK SHARP EDGES

MAX. XX MIN. XX

Q.A. CATEGORY A-3

		DATE
DRAWN BY	Schoenfeld	11/23/04
CHECKED BY		
DESIGN APPROVAL		
ENGINEER APPROVAL		
SUPVR. APPROVAL		

NEXT ASSEMBLY

BROOKHAVEN NATIONAL LABORATORY
ASSOCIATED UNIVERSITIES, INC.
UPTON, N.Y. 11973

CONTROLS WIRING DIAGRAM

BLDG HITL1

VME CHASSIS CFE-HITL1-VME

SIZE D | TALCOVE_HITL_39 | REV. A

DRAWING NUMBER

MATERIAL: ——— SCALE: NA WEIGHT: – SHEET 38

*AUTOCAD

Schoenfeld, Controls 11/8/2004 3:43 PM talcove_hitl_40.dwg

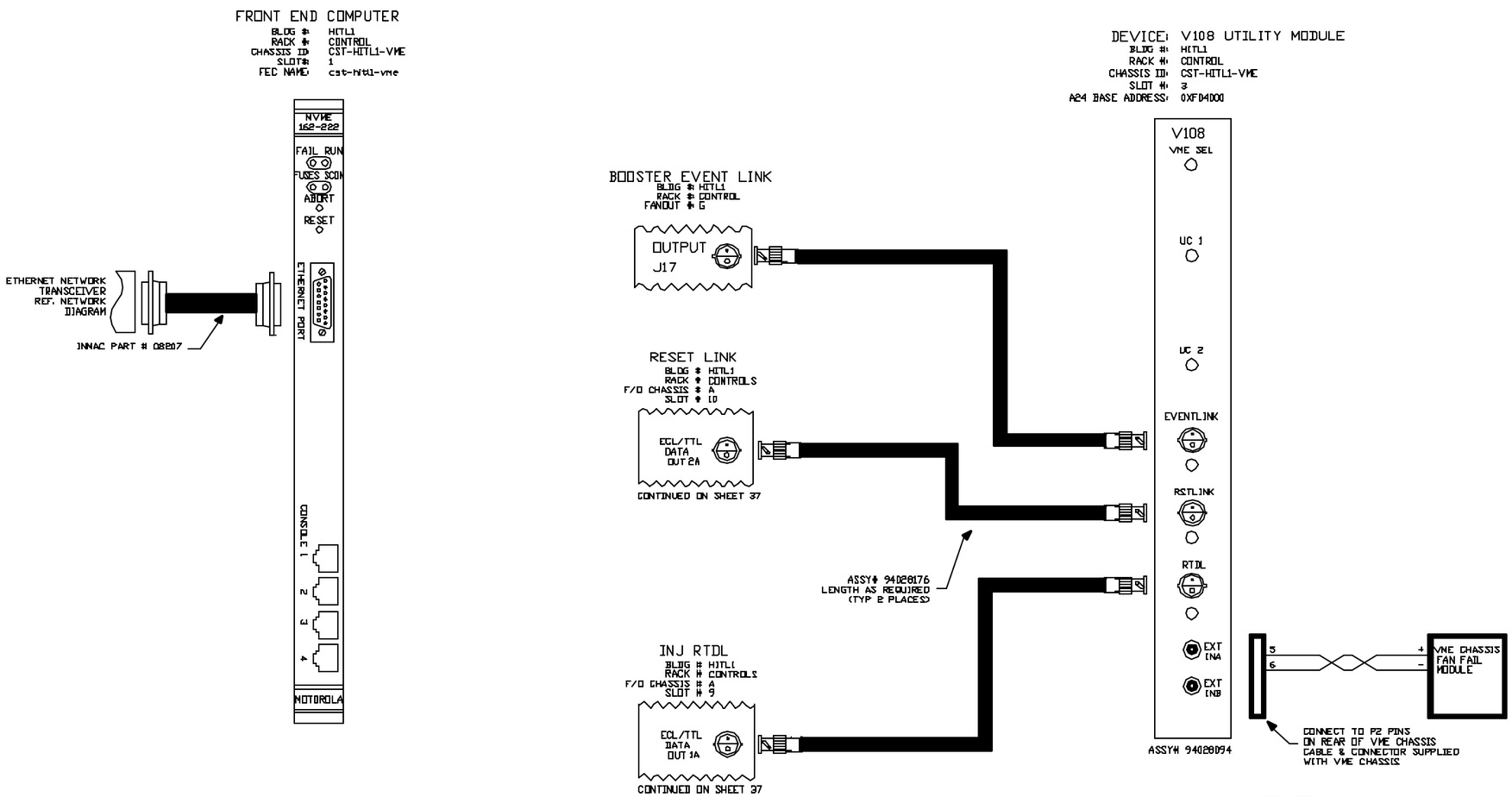

JUMPER LIST

E25 through E50 are configured for remote reset address at the time of board acceptance test.
DO NOT MODIFY!

Remote reset pulls VME SYS Reset.
E58-E60, E59-E61

A24 BASE ADDRESS= 4000h
E1-E13, E2-E14, E3-E15, E4-E16, E5-E17, E6-E18
E7-E19, E8-E20, E9-E21, E10-E22, E11-E24, E57-E23
SW1=OPEN
SW2=CLOSED
SW3=OPEN
SW4=OPEN

-3 -2 -1 QTY REQD	REV DESIGNATION	ECN NO.	DESCRIPTION		MAT'L DWG NO./ENG. NO.
	INTERPRET IN GENERAL ACCORDANCE WITH ASME Y14.24M-1989	Q.A. CATEGORY A-3	DATE	BROOKHAVEN NATIONAL LABORATORY ASSOCIATED UNIVERSITIES, INC. UPTON, N.Y. 11973	
	UNLESS OTHERWISE SPECIFIED DIMENSIONS ARE IN INCHES	DRAWN BY Schoenfeld	11/29/04	CONTROLS WIRING DIAGRAM	
	DECIMAL TOLERANCES .X ±.030 .XX ±.015 .XXX ±.005 ANGULAR TOLERANCE ± .5°	CHECKED BY		HITL1, CHASSIS CST-HITL1-VME	
		DESIGN APPROVAL		FT END COMP/V108 UTIL MODULE	
		ENGINEER APPROVAL			
		SUPVR. APPROVAL		SIZE D	TALCOVE_HITL_40 REV. A
	NA FINISH	BREAK SHARP EDGES MAX. XX MIN. XX	NEXT ASSEMBLY	DRAWING NUMBER	
OUTSTANDING ECN				MATERIAL: ———	SCALE: NA WEIGHT: – SHEET 40

1 *AUTOCAD

Schoenfeld, Controls 11/8/2004 3:43 PM talcove_hitl_41.dwg

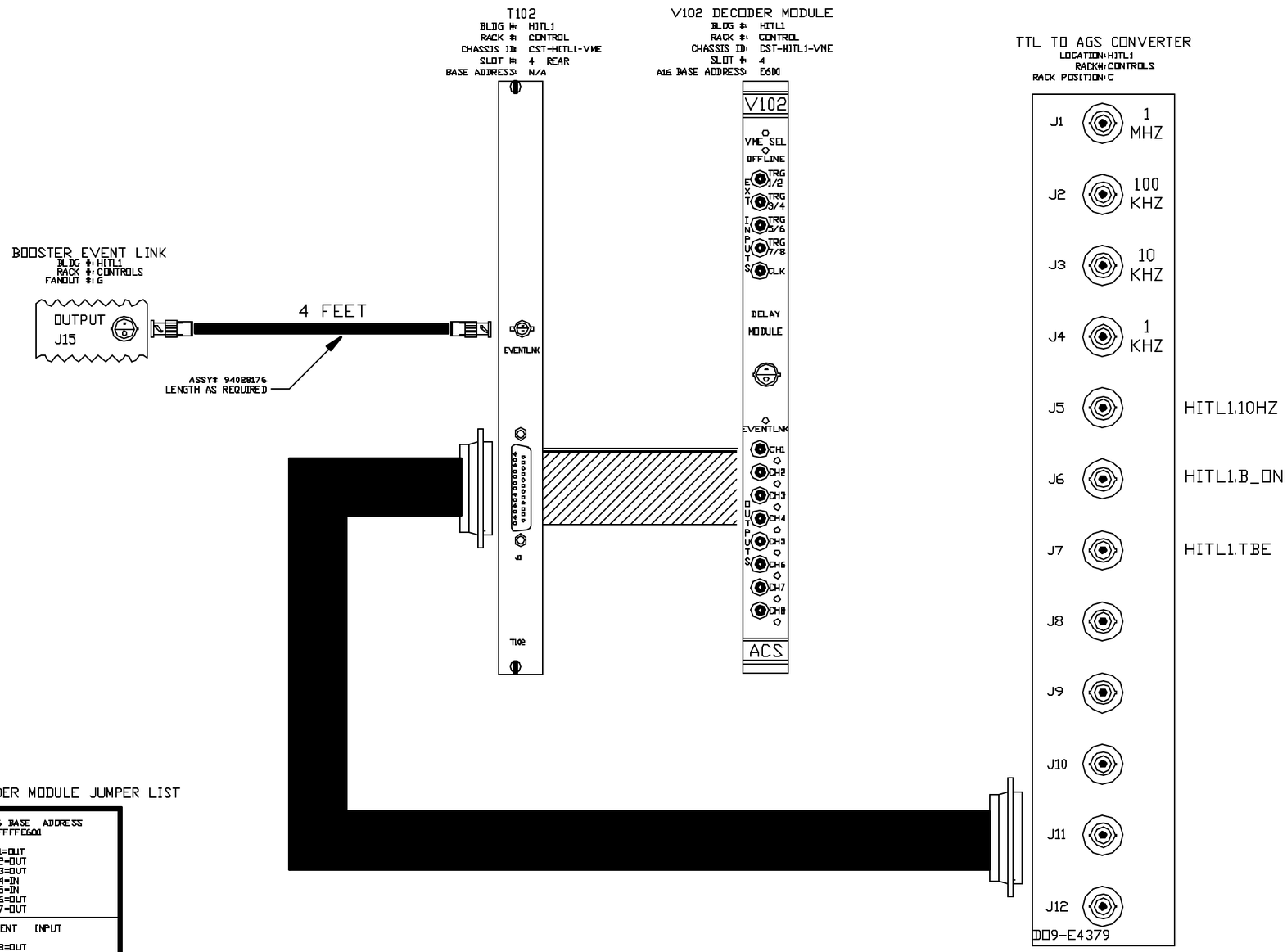

V102 DECODER MODULE JUMPER LIST

A16 BASE ADDRESS 0XFFFFE600 JP1=OUT JP2=OUT JP3=OUT JP4=IN JP5=IN JP6=OUT JP7=OUT
EVENT INPUT JP8=OUT JP9=IN JP10=IN
JP11=IN JP12=OUT JP13=OUT JP14=IN

REV.	ZONE	ECN NO.	DATE	BY	CKR	APP.

-3	-2	-1	REF DESIGNATION	FGM NO.	DESCRIPTION	MAT'L DWG NO./SPE NO.
ANY ARMS						

INTERPRET IN GENERAL ACCORDANCE WITH ASME Y14.24M-1989

UNLESS OTHERWISE SPECIFIED DIMENSIONS ARE IN INCHES

DECIMAL TOLERANCES
.X ±.030
.XX ±.015
.XXX ±.005
ANGULAR TOLERANCE ± .5°

NA FINISH

BREAK SHARP EDGES MAX. XX MIN. XX

OUTSTANDING ECN

Q.A. CATEGORY A-3

		DATE
DRAWN BY	Schoenfeld	11/18/04
CHECKED BY		
DESIGN APPROVAL		
ENGINEER APPROVAL		
SUPVR. APPROVAL		

NEXT ASSEMBLY

BROOKHAVEN NATIONAL LABORATORY
ASSOCIATED UNIVERSITIES, INC.
UPTON, N.Y. 11973

CONTROLS WIRING DIAGRAM

BLDG HITL1, CST-HITL1-VME

V102 DECODER MODULE

SIZE D

TALCOVE_HITL_41

DRAWING NUMBER

REV. A

MATERIAL: ——— SCALE: NA WEIGHT: - SHEET 41

*AUTOCAD

Schoenfeld, Controls 11/8/2004 3:44 PM talcove_hitl_42.dwg

GPIB 1014 FOR 488 DEVICE CONTROLLERS

BLDG #: HITL1
RACK #: CONTROL
CHASSIS ID: CST-HITL1-VME
SLOT #: 19
A24 BASE ADDRESS: 0XF0002000

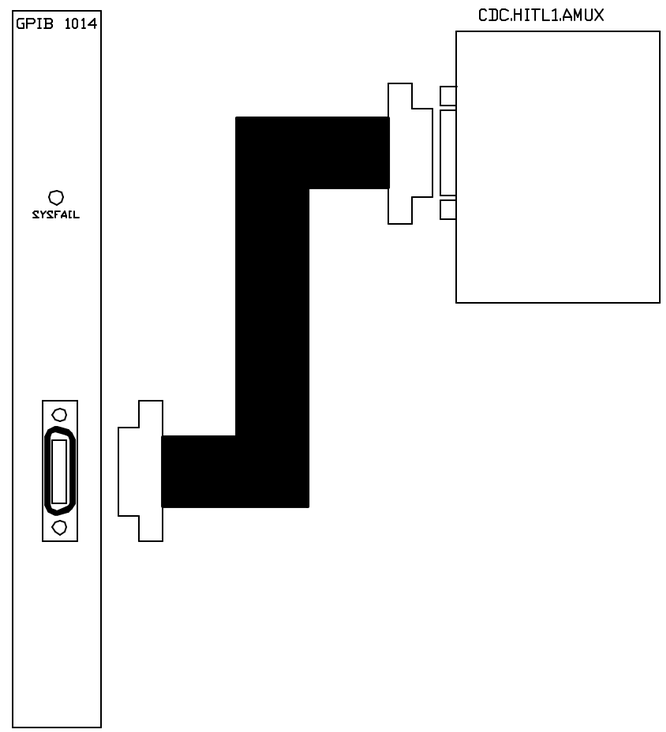

GPIB 1014 FOR TRANSLATOR 488 CONNECTIONS

BLDG #: HITL1
RACK #: CONTROL
CHASSIS ID: CST-HITL1-VME
SLOT #: 21
A24 BASE ADDRESS: 0XF0002400

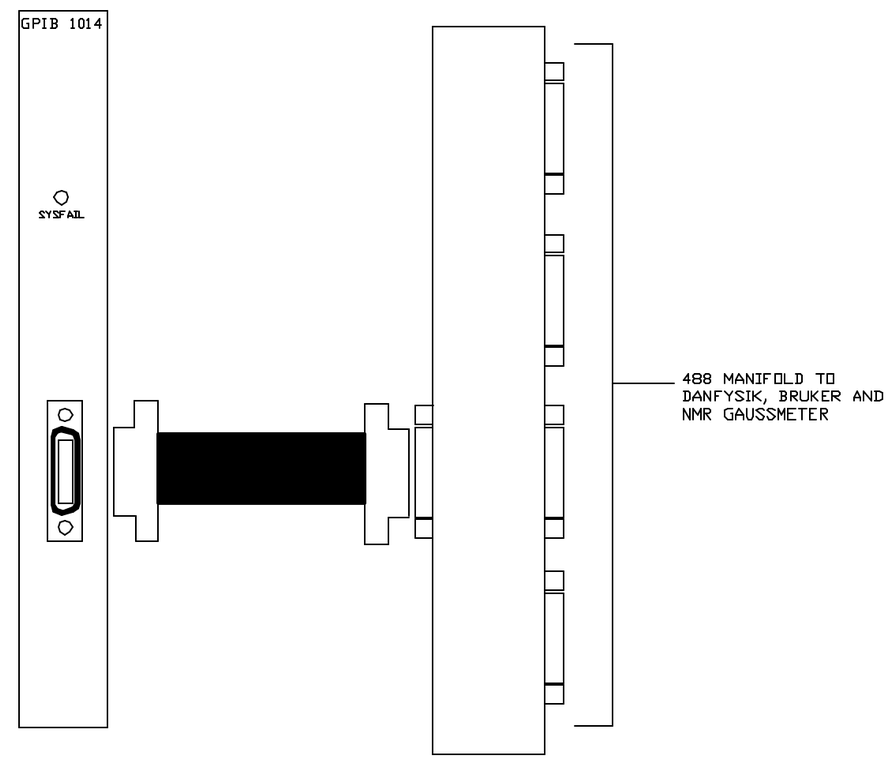

INTERPRET IN GENERAL ACCORDANCE WITH ASME Y14.24M-1989	Q.A. CATEGORY A-3	DATE	BROOKHAVEN NATIONAL LABORATORY ASSOCIATED UNIVERSITIES, INC. UPTON, N.Y. 11973
	DRAWN BY: Schoenfeld	11/5/04	
UNLESS OTHERWISE SPECIFIED DIMENSIONS ARE IN INCHES	CHECKED BY		CONTROLS WIRING DIAGRAM
DECIMAL TOLERANCES: .X ±.030 .XX ±.015 .XXX ±.005 ANGULAR TOLERANCE ± .5°	DESIGN APPROVAL		BLDG HITL1, CST-HITL1-VME
	ENGINEER APPROVAL		GPIB INTER FOR DEVICE CNTRLS
	SURVEY APPROVAL		SIZE: TALCOVE_HITL_42 REV.
NA FINISH	BREAK SHARP EDGES MAX. XX MIN. XX	NEXT ASSEMBLY	DRAWING NUMBER
OUTSTANDING ECN			MATERIAL: —— SCALE: NA WEIGHT: - SHEET 42

*AUTOCAD

Schoenfeld, Controls 11/8/2004 3:44 PM talcove_hitl_43.dwg

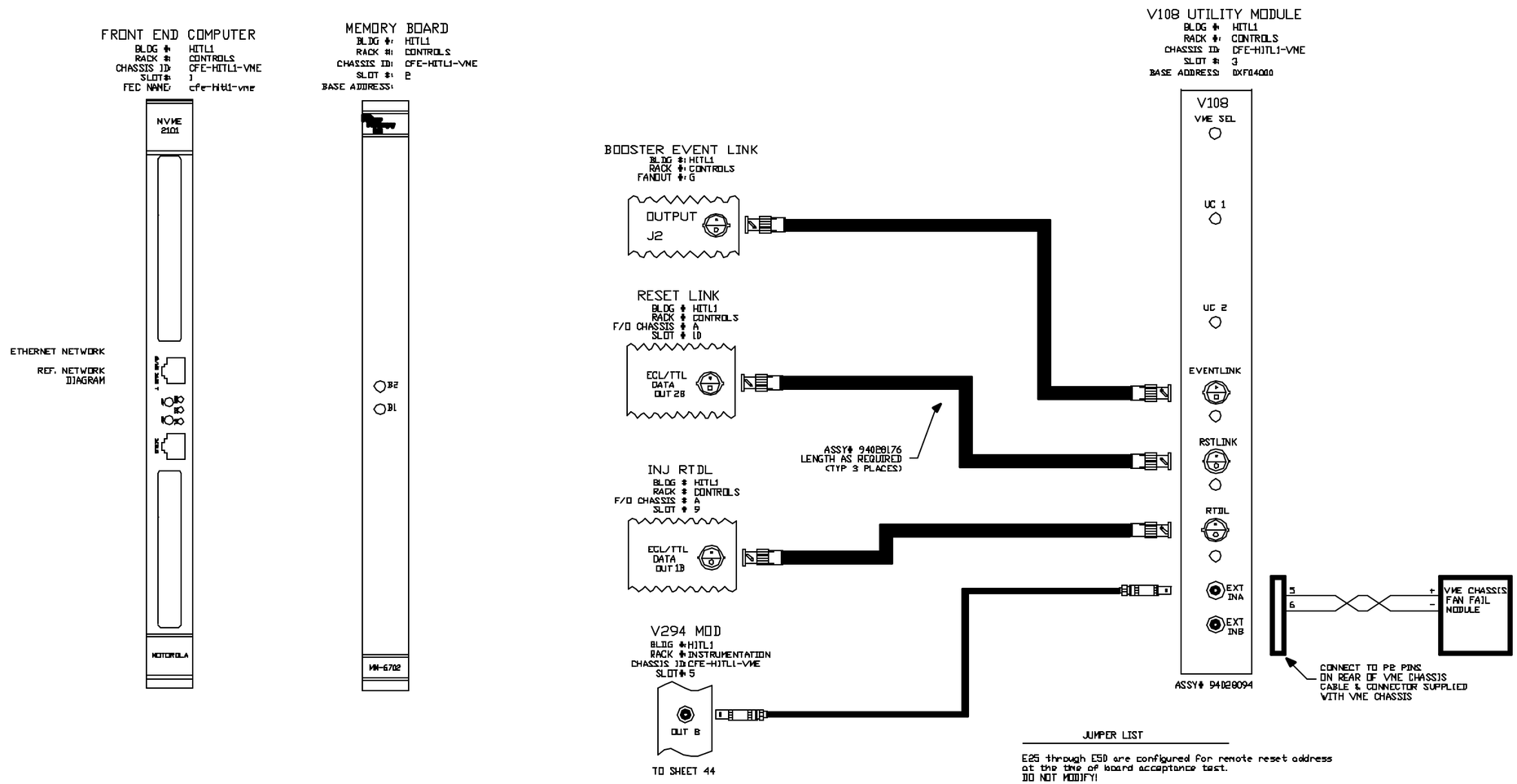

JUMPER LIST

E25 through E50 are configured for remote reset address at the time of board acceptance test.
DO NOT MODIFY!

Remote reset pulls VME SYS Reset.
E58-E60, E59-E61

A24 BASE ADDRESS= 4000h
E1-E13, E2-E14, E3-E15, E4-E16, E5-E17, E6-E18
E7-E19, E8-E20, E9-E21, E10-E22, E11-E24, E57-E63
SW1=OPEN
SW2=CLOSED
SW3=OPEN
SW4=OPEN

REV.	ZONE	ECN NO.	DATE	BY	CKR	APP.

-3	-2	-1	REF DESIGNATOR	ITEM NO.	DESCRIPTION	MATL DWG NO./ENG. NO.
QTY REQD						

INTERPRET IN GENERAL ACCORDANCE WITH ASME Y14.24M-1989
UNLESS OTHERWISE SPECIFIED DIMENSIONS ARE IN INCHES
DECIMAL TOLERANCES .X ±.030 .XX ±.015 .XXX ±.005
ANGULAR TOLERANCE ± .5°
NA FINISH
BREAK SHARP EDGES
MAX. XX MIN. XX
OUTSTANDING ECN

Q.A. CATEGORY A-3
DRAWN BY Schoenfeld DATE 11/29/04
CHECKED BY
DESIGN APPROVAL
ENGINEER APPROVAL
SUPVR. APPROVAL
NEXT ASSEMBLY

BROOKHAVEN NATIONAL LABORATORY
UPTON, N.Y. 11973
CONTROLS WIRING DIAGRAM
BLDG HITL1, CHASSIS CFE-HITL1-VME
FT END COMP /V108 UTIL MODULE

SIZE D
TALCOVE_HITL_43
DRAWING NUMBER
REV. A
MATERIAL: ——— SCALE: FULL WEIGHT: - SHEET 43

*AUTOCAD

Schoenfeld, Controls 11/8/2004 3:45 PM talcove_hitl_44.dwg

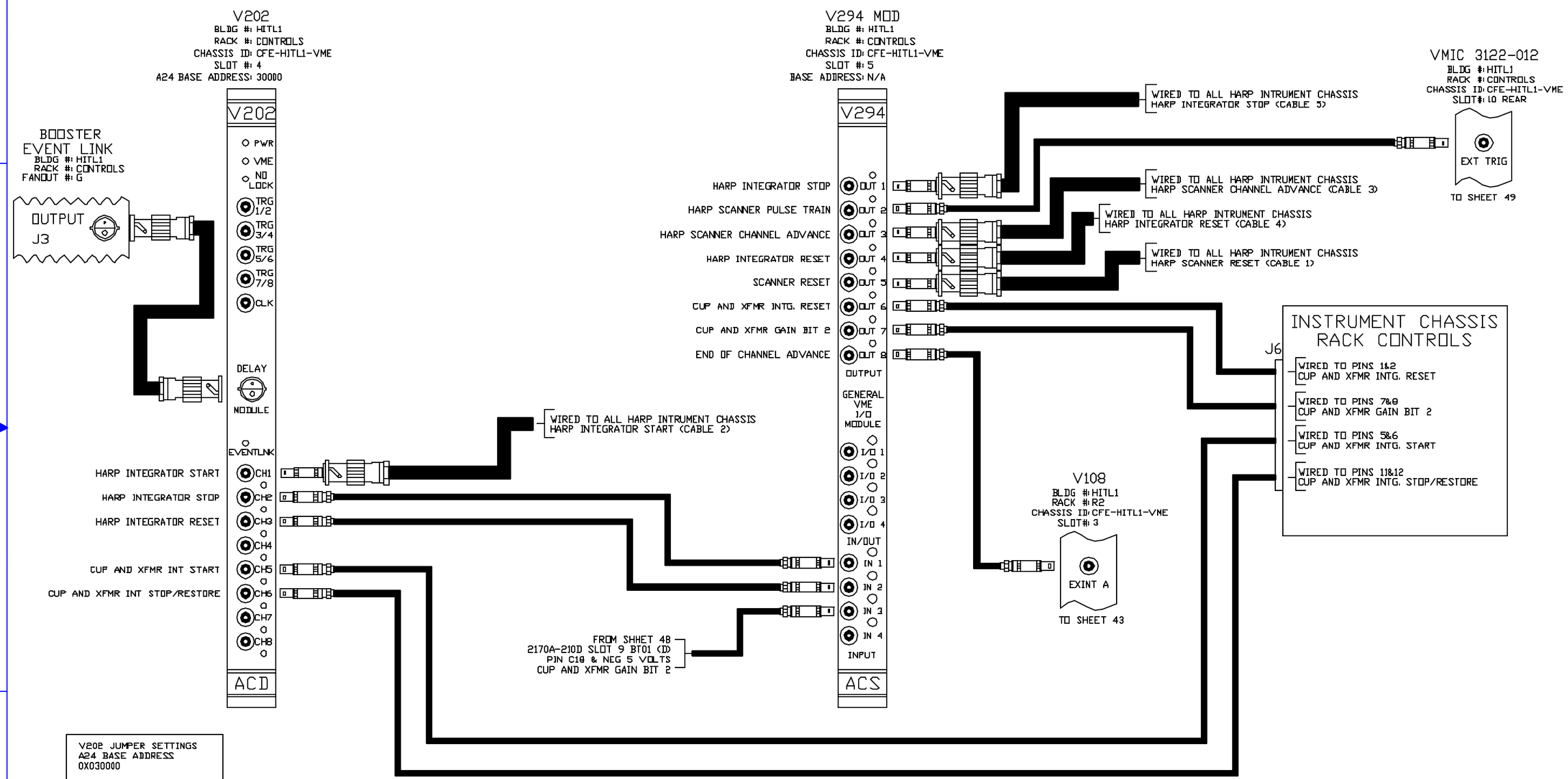

V202 JUMPER SETTINGS
A24 BASE ADDRESS
0X030000

SW1	JP1=IN
A16=1	JP2=PIN 1 TO 2
A17=1	JP3=IN
A18=0	JP4=OUT
A19=0	JP5=OUT
A20=0	JP6=OUT
A21=0	JP7=OUT
A22=0	JP8=OUT
A23=0	JP9=OUT
	JP10=IN
	JP11,12,13=IN

REV.	ZONE	ECN NO.	DATE	BY	CHKR	APP.

INTERPRET IN GENERAL ACCORDANCE WITH ASME Y14.24M-1989	Q.A. CATEGORY A-3	DATE	BROOKHAVEN NATIONAL LABORATORY	
UNLESS OTHERWISE SPECIFIED DIMENSIONS ARE IN INCHES	DRAWN BY Schoenfeld	10/13/04	UPTON, N.Y. 11973	
DECIMAL TOLERANCES .X ±.030 .XX ±.015 .XXX ±.005 ANGULAR TOLERANCE ± .5°	CHECKED BY		CONTROLS WIRING DIAGRAM	
	DESIGN APPROVAL		BLDG HITL1, CFE-HITL1-VME	
	ENGINEER APPROVAL		V202 AND V294 WIRING DIAGRAM	
NA FINISH	BREAK SHARP EDGES MAX. XX MIN. XX	SUPVR. APPROVAL	SIZE D	TALCOVE_HITL_44 (DRAWING NUMBER) REV. A
OUTSTANDING ECN		NEXT ASSEMBLY	MATERIAL: ———	SCALE: FULL WEIGHT: – SHEET 44

*AUTOCAD

Schoenfeld, Controls 11/8/2004 3:45 PM talcove_hitl_45.dwg

BT01 I/O PANEL

BLDG #: HITL1
RACK #: CONTROLS
PANEL #: A

VMIC 1160A-200D (A)
BLDG #: HITL1
RACK #: CONTROLS
CHASSIS ID: CFE-HITL1-VME
SLOT #: 6
A16 BASE ADDRESS: E000

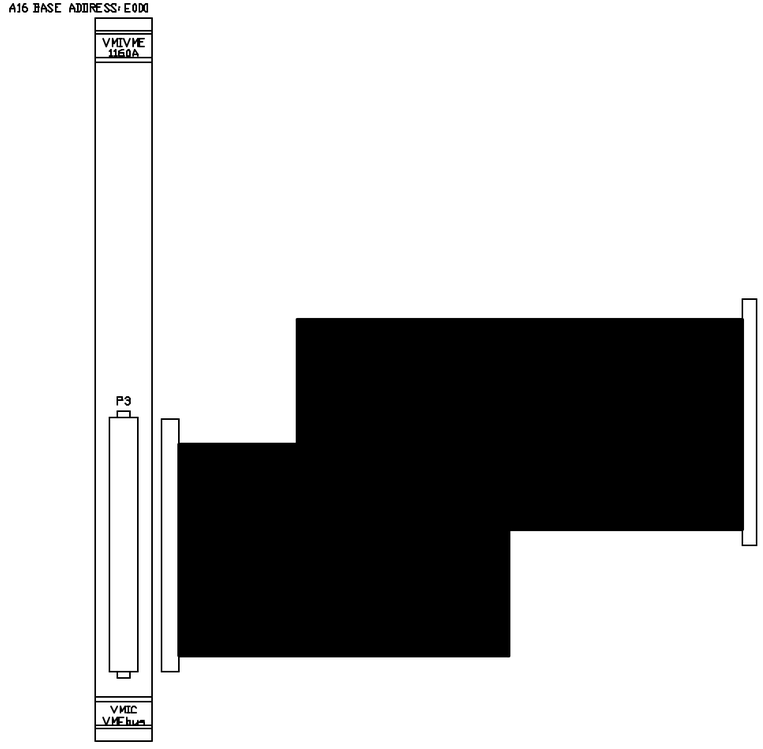

	TYPE OF SIGNAL	VAGO STRIP	NAME OF SIGNAL
A1	OUT STATUS HI	PIN 7 INST1-1	HARP 1 TTL.14MW240
C1	OUT STATUS LOW	PIN 8 INST1-1	
A2	IN STATUS HI	PIN 5 INST1-1	
C2	IN STATUS LOW	PIN 6 INST1-1	
A3	REM/LOC STATUS HI	PIN 15 INST1-1	
C3	REM/LOC STATUS LOW	PIN 16 INST1-1	
A4	OUT STATUS HI	PIN 11 INST1-1	CUP 1 TTL.14FC240
C4	OUT STATUS LOW	PIN 12 INST1-1	
A5	IN STATUS HI	PIN 9 INST1-1	
C5	IN STATUS LOW	PIN 10 INST1-1	
A6	REM/LOC STATUS HI	PIN 15 INST1-1	
C6	REM/LOC STATUS LOW	PIN 16 INST1-1	
A7	HI VOLT STATUS HI	PIN 13 INST1-1	
C7	HI VOLT STATUS LOW	PIN 14 INST1-1	
A8	OUT STATUS HI	PIN 7 INST1-2	HARP 2 TTL.15MW240
C8	OUT STATUS LOW	PIN 8 INST1-2	
A9	IN STATUS HI	PIN 5 INST1-2	
C9	IN STATUS LOW	PIN 6 INST1-2	
A10	REM/LOC STATUS HI	PIN 15 INST1-2	
C10	REM/LOC STATUS LOW	PIN 16 INST1-2	
A11	OUT STATUS HI	PIN 11 INST1-2	CUP 2 TTL.15FC240
C11	OUT STATUS LOW	PIN 12 INST1-2	
A12	IN STATUS HI	PIN 9 INST1-2	
C12	IN STATUS LOW	PIN 10 INST1-2	
A13	REM/LOC STATUS HI	PIN 15 INST1-2	
C13	REM/LOC STATUS LOW	PIN 16 INST1-2	
A14	HI VOLT STATUS HI	PIN 13 INST1-2	
C14	HI VOLT STATUS LOW	PIN 14 INST1-2	
A15	OUT STATUS HI	PIN 7 INST1-3	HARP 3 TTL.16MW155
C15	OUT STATUS LOW	PIN 8 INST1-3	
A16	IN STATUS HI	PIN 5 INST1-3	
C16	IN STATUS LOW	PIN 6 INST1-3	
A17	REM/LOC STATUS HI	PIN 15 INST1-3	
C17	REM/LOC STATUS LOW	PIN 16 INST1-3	
A18	OUT STATUS HI	PIN 11 INST1-3	CUP 3 TTL.16FC155
C18	OUT STATUS LOW	PIN 12 INST1-3	
A19	IN STATUS HI	PIN 9 INST1-3	
C19	IN STATUS LOW	PIN 10 INST1-3	
A20	REM/LOC STATUS HI	PIN 15 INST1-3	
C20	REM/LOC STATUS LOW	PIN 16 INST1-3	
A21	HI VOLT STATUS HI	PIN 13 INST1-3	
C21	HI VOLT STATUS LOW	PIN 14 INST1-3	
A22	OUT STATUS HI	PIN 7 INST1-4	HARP 4 TTL.17MW030
C22	OUT STATUS LOW	PIN 8 INST1-4	
A23	IN STATUS HI	PIN 5 INST1-4	
C23	IN STATUS LOW	PIN 6 INST1-4	
A24	REM/LOC STATUS HI	PIN 15 INST1-4	
C24	REM/LOC STATUS LOW	PIN 16 INST1-4	
A25	OUT STATUS HI	PIN 11 INST1-4	CUP 4 TTL.17FC030
C25	OUT STATUS LOW	PIN 12 INST1-4	
A26	IN STATUS HI	PIN 9 INST1-4	
C26	IN STATUS LOW	PIN 10 INST1-4	
A27	REM/LOC STATUS HI	PIN 15 INST1-4	
C27	REM/LOC STATUS LOW	PIN 16 INST1-4	
A28	HI VOLT STATUS HI	PIN 13 INST1-4	
C28	HI VOLT STATUS LOW	PIN 14 INST1-4	
A29	OUT STATUS HI	PIN 7 INST1-5	HARP 5 TTL.17MW058
C29	OUT STATUS LOW	PIN 8 INST1-5	
A30	IN STATUS HI	PIN 5 INST1-5	
C30	IN STATUS LOW	PIN 6 INST1-5	
A31	REM/LOC STATUS HI	PIN 15 INST1-5	
C31	REM/LOC STATUS LOW	PIN 16 INST1-5	
A32			
C32			

The following jumpers are installed:
J1, J3, J5, J7, J9, J11, J13, J15, J17, J19, J21, J23, J25, J27, J29, J31, J33, J35, J37, J39, J41, J43, J45, J47, J49, J51, J53, J55, J57, J59, J61, J63

U35
SW 1-3 OFF
SW 4-8 ON

U34
SW 1-8 ON

J65 AM2 For Short Supervisory I/O Access or Short Nonprivileged I/O Access

REV.	ZONE	ECN NO.	DATE	BY	CKR	APP.

-3	-2	-1	REF DESIGNATION	FSCM NO.	DESCRIPTION	MANF. DWG HOUSING NO.
ANY ASSEM						

INTERPRET IN GENERAL ACCORDANCE WITH ASME Y14.24M-1989
UNLESS OTHERWISE SPECIFIED DIMENSIONS ARE IN INCHES
DECIMAL TOLERANCES: .X ±.030, .XX ±.015, .XXX ±.005
ANGULAR TOLERANCE ± .5°
FINISH: NA
BREAK SHARP EDGES MAX. XX MIN. XX
OUTSTANDING ECN

Q.A. CATEGORY A-3

		DATE
DRAWN BY	Schoenfeld	11/13/04
CHECKED BY		
DESIGN APPROVAL		
ENGINEER APPROVAL		
SUPVR. APPROVAL		

NEXT ASSEMBLY

BROOKHAVEN NATIONAL LABORATORY
UPTON, N.Y. 11973
CONTROLS WIRING DIAGRAM
BLDG HITL1, CFE-HITL1-VME
VMIC 1160A-200D WIRING (A)

SIZE D — DRAWING NUMBER TALCOVE_HITL_45 — REV. A

MATERIAL: ——— SCALE: FULL WEIGHT: - SHEET 45

*AUTOCAD

REV.	ZONE	ECN NO.	DATE	BY	CKR	APP.

Schoenfeld, Controls 11/8/2004 3:45 PM talcove_hitl_46.dwg

BT01 I/O PANEL

BLDG #: HITL1
RACK #: CONTROLS
PANEL #: B

VMIC 1160A-200D (B)
BLDG #: HITL1
RACK #: CONTROLS
CHASSIS ID: CFE-HITL1-VME
SLOT #: 7
A16 BASE ADDRESS: E020

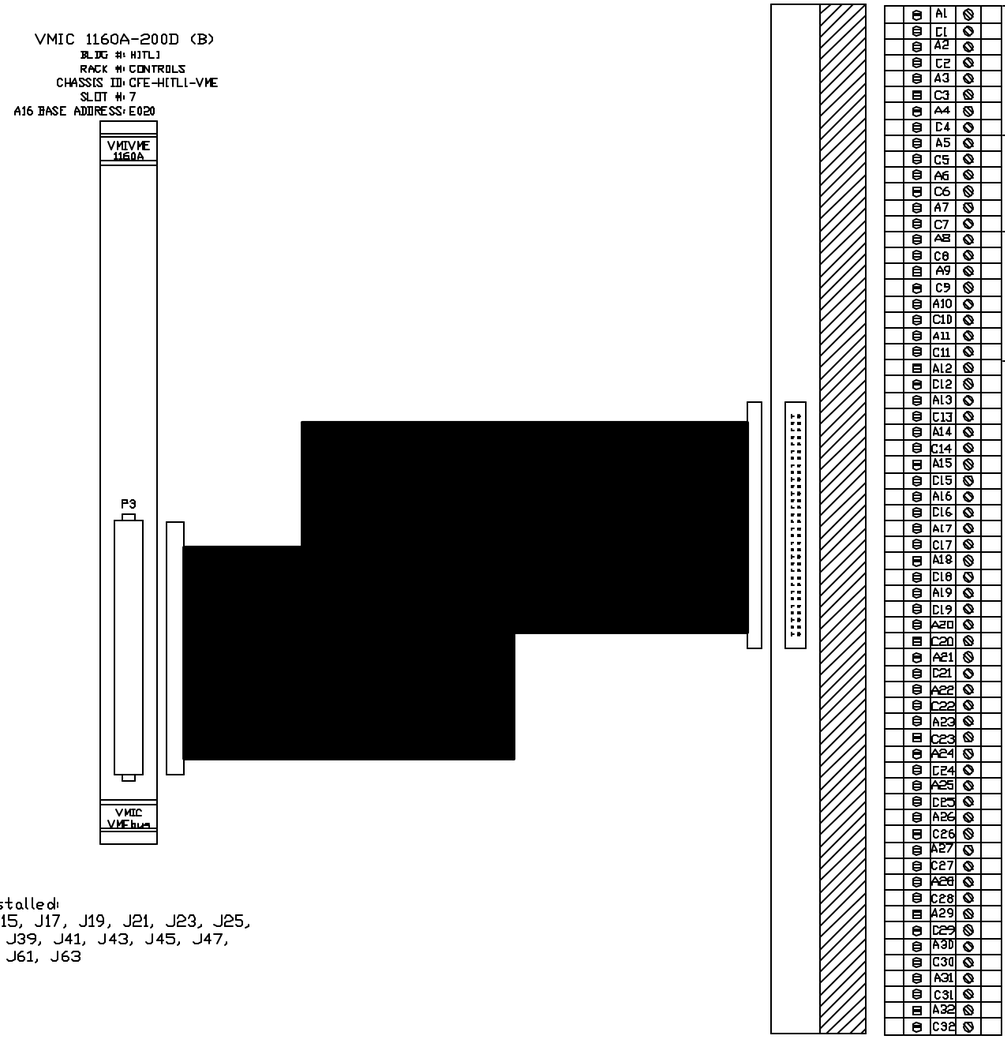

	TYPE OF SIGNAL	VAGO STRIP	NAME OF SIGNAL
A1	OUT STATUS HI	PIN 11 INST1-5	CUP 5 TTL.17FC058
C1	OUT STATUS LOW	PIN 12 INST1-5	
A2	IN STATUS HI	PIN 9 INST1-5	
C2	IN STATUS LOW	PIN 10 INST1-5	
A3	REM/LOC STATUS HI	PIN 15 INST1-5	
C3	REM/LOC STATUS LOW	PIN 16 INST1-5	
A4	HI VOLT STATUS HI	PIN 13 INST1-5	
C4	HI VOLT STATUS LOW	PIN 14 INST1-5	
A5	OUT STATUS HI	PIN 7 INST1-6	HARP 6 TTL.18MW153
C5	OUT STATUS LOW	PIN 8 INST1-6	
A6	IN STATUS HI	PIN 5 INST1-6	
C6	IN STATUS LOW	PIN 6 INST1-6	
A7	REM/LOC STATUS HI	PIN 15 INST1-6	
C7	REM/LOC STATUS LOW	PIN 16 INST1-6	
A8	OUT STATUS HI	PIN 11 INST1-6	CUP 6 TTL.18FC153
C8	OUT STATUS LOW	PIN 12 INST1-6	
A9	IN STATUS HI	PIN 9 INST1-6	
C9	IN STATUS LOW	PIN 10 INST1-6	
A10	REM/LOC STATUS HI	PIN 15 INST1-6	
C10	REM/LOC STATUS LOW	PIN 16 INST1-6	
A11	HI VOLT STATUS HI	PIN 13 INST1-6	
C11	HI VOLT STATUS LOW	PIN 14 INST1-6	
A12			
C12			
A13			
C13			
A14			
C14			
A15			
C15			
A16			
C16			
A17			
C17			
A18			
C18			
A19			
C19			
A20			
C20			
A21			
C21			
A22			
C22			
A23			
C23			
A24			
C24			
A25			
C25			
A26			
C26			
A27			
C27			
A28			
C28			
A29			
C29			
A30			
C30			
A31			
C31			
A32			
C32			

The following jumpers are installed:
J1, J3, J5, J7, J9, J11, J13, J15, J17, J19, J21, J23, J25,
J27, J29, J31, J33, J35, J37, J39, J41, J43, J45, J47,
J49, J51, J53, J55, J57, J59, J61, J63

U35
SW 1-3 OFF
SW 4-8 ON

U34
SW 1-2 ON
SW 3 OFF
SW 4-8 ON

J65 AM2 For Short Supervisory I/O Access or Short
Nonprivileged I/O Access

-3	-2	-1	REF DESIGNATION	ITEM NO.	DESCRIPTION	MFG. DWG NO./INS. NO.
QTY REQD						

INTERPRET IN GENERAL ACCORDANCE WITH ASME Y14.24M-1989
UNLESS OTHERWISE SPECIFIED DIMENSIONS ARE IN INCHES
DECIMAL TOLERANCES .X ±.030 .XX ±.015 .XXX ±.005
ANGULAR TOLERANCE ± .5°
NA FINISH
BREAK SHARP EDGES MAX. XX MIN. XX
OUTSTANDING ECN

Q.A. CATEGORY A-3

		DATE
DRAWN BY	Schoenfeld	11/13/04
CHECKED BY		
DESIGN APPROVAL		
ENGINEER APPROVAL		
SUPVR. APPROVAL		

NEXT ASSEMBLY

BROOKHAVEN NATIONAL LABORATORY
UPTON, N.Y. 11973
CONTROLS WIRING DIAGRAM
BLDG HITL1, CFE-HITL1-VME
VMIC 1160A-200D WIRING (B)

SIZE D | DRAWING NUMBER TALCOVE_HITL_46 | REV. A

MATERIAL: ——— SCALE: FULL WEIGHT: - SHEET 46

1 *AUTOCAD

Schoenfeld, Controls 11/8/2004 3:46 PM talcove_hitl_47.dwg

BT01 I/O PANEL

BLDG #:HITL1
RACK #:VACUUM
PANEL #:C

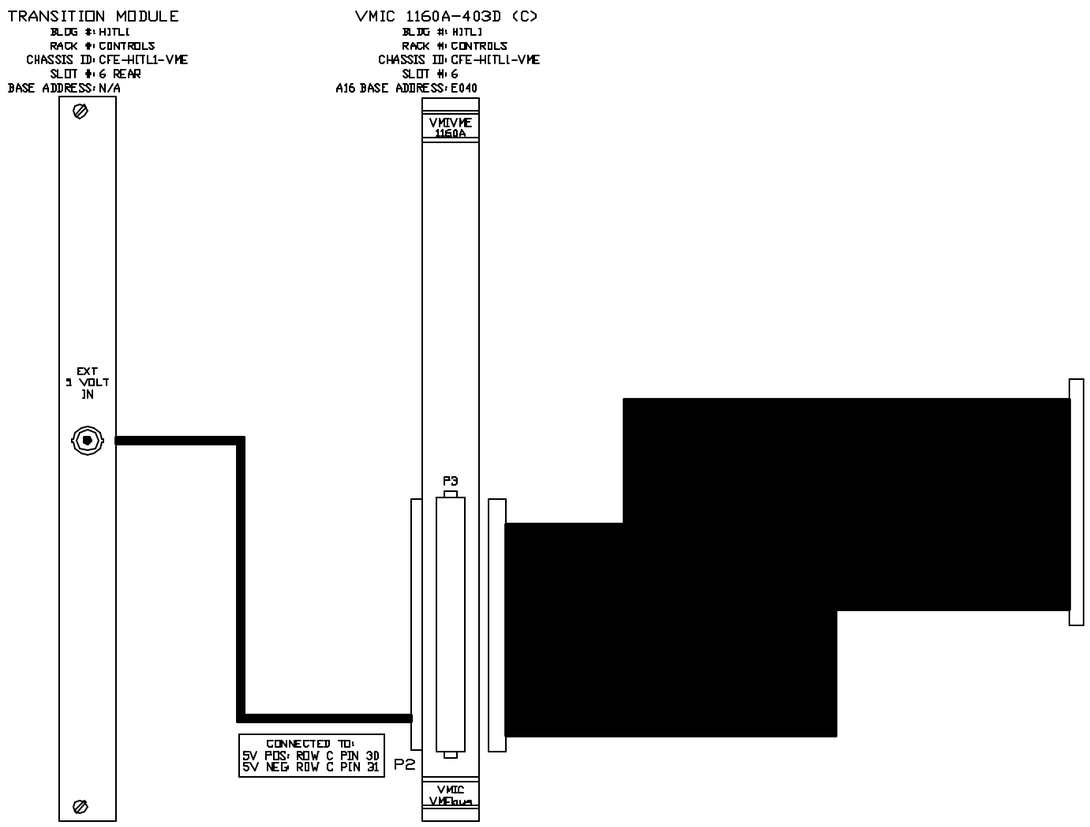

		TYPE OF SIGNAL	WAGO STRIP	NAME OF SIGNAL
A1		OPEN STATUS HI	PIN 25 VAC-2-1	VAC VALVE 1 14VP241
C1		OPEN STATUS LOW	PIN 33 VAC-2-1	
A2		CLOSED STATUS HI	PIN 34 VAC-2-1	
C2		CLOSED STATUS LOW	PIN 33 VAC-2-1	
A3		OPEN STATUS HI	PIN 11 VAC-2-2	VAC VALVE 2 15VP239
C3		OPEN STATUS LOW	PIN 3 VAC-2-2	
A4		CLOSED STATUS HI	PIN 4 VAC-2-2	
C4		CLOSED STATUS LOW	PIN 3 VAC-2-2	
A5		OPEN STATUS HI	PIN 25 VAC-2-2	VAC VALVE 3 15VP241
C5		OPEN STATUS LOW	PIN 33 VAC-2-2	
A6		CLOSED STATUS HI	PIN 34 VAC-2-2	
C6		CLOSED STATUS LOW	PIN 33 VAC-2-2	
A7		OPEN STATUS HI	PIN 11 VAC-2-3	VAC VALVE 4 16VP164
C7		OPEN STATUS LOW	PIN 3 VAC-2-3	
A8		CLOSED STATUS HI	PIN 4 VAC-2-3	
C8		CLOSED STATUS LOW	PIN 3 VAC-2-3	
A9		OPEN STATUS HI	PIN 25 VAC-2-3	VAC VALVE 5 16VP156
C9		OPEN STATUS LOW	PIN 33 VAC-2-3	
A10		CLOSED STATUS HI	PIN 34 VAC-2-3	
C10		CLOSED STATUS LOW	PIN 33 VAC-2-3	
A11		OPEN STATUS HI	PIN 11 VAC-2-4	VAC VALVE 6 17VP025
C11		OPEN STATUS LOW	PIN 3 VAC-2-4	
A12		CLOSED STATUS HI	PIN 4 VAC-2-4	
C12		CLOSED STATUS LOW	PIN 3 VAC-2-4	
A13		OPEN STATUS HI	PIN 25 VAC-2-4	VAC VALVE 7 17VP037
C13		OPEN STATUS LOW	PIN 33 VAC-2-4	
A14		CLOSED STATUS HI	PIN 34 VAC-2-4	
C14		CLOSED STATUS LOW	PIN 33 VAC-2-4	
A15		OPEN STATUS HI	PIN 11 VAC-2-5	VAC VALVE 8 17VP057
C15		OPEN STATUS LOW	PIN 3 VAC-2-5	
A16		CLOSED STATUS HI	PIN 4 VAC-2-5	
C16		CLOSED STATUS LOW	PIN 3 VAC-2-5	
A17		OPEN STATUS HI	PIN 25 VAC-2-5	VAC VALVE 9 17VP059
C17		OPEN STATUS LOW	PIN 33 VAC-2-5	
A18		CLOSED STATUS HI	PIN 34 VAC-2-5	
C18		CLOSED STATUS LOW	PIN 33 VAC-2-5	
A19		OPEN STATUS HI	PIN 11 VAC-2-6	VAC VALVE 10 18VP152
C19		OPEN STATUS LOW	PIN 3 VAC-2-6	
A20		CLOSED STATUS HI	PIN 4 VAC-2-6	
C20		CLOSED STATUS LOW	PIN 3 VAC-2-6	
A21		OPEN STATUS HI	PIN 25 VAC-2-6	VAC VALVE 11 18VP154
C21		OPEN STATUS LOW	PIN 33 VAC-2-6	
A22		CLOSED STATUS HI	PIN 34 VAC-2-6	
C22		CLOSED STATUS LOW	PIN 33 VAC-2-6	
A23		OPEN STATUS HI	PIN 13 VAC-2-7	VAC VALVE 12 19VP249
C23		OPEN STATUS LOW	PIN 14 VAC-2-7	
A24		CLOSED STATUS HI	PIN 12 VAC-2-7	
C24		CLOSED STATUS LOW	PIN 14 VAC-2-7	
A25				
C25				
A26				
C26				
A27				
C27				
A28				
C28				
A29				
C29				
A30				
C30				
A31				
C31				
A32				
C32				

The following jumpers are installed:
J1, J3, J5, J7, J9, J11, J13, J15, J17, J19, J21, J23, J25,
J27, J29, J31, J33, J35, J37, J39, J41, J43, J45, J47,
J49, J51, J53, J55, J57, J59, J61, J63

U35
SW 1-3 OFF
SW 4-8 ON

U34
SW 1 ON
SW 2 OFF
SW 3-8 ON

J65 AM2 For Short Supervisory I/O Access or Short
Nonprivileged I/O Access

REV.	ZONE	ECN NO.	DATE	BY	CKR	APP.

-3	-2	-1	REF DESIGNATOR	ITEM NO.	DESCRIPTION	MFG. DWG NO.&NO.
QTY REQD						

INTERPRET IN GENERAL ACCORDANCE WITH ASME Y14.24M-1989
UNLESS OTHERWISE SPECIFIED DIMENSIONS ARE IN INCHES
DECIMAL TOLERANCES .X ±.030 .XX ±.015 .XXX ±.005
ANGULAR TOLERANCE ± 5°
OUTSTANDING ECN
NA
RNSN
BREAK SHARP EDGES
MAX. XX MIN. XX

Q.A. CATEGORY A-3
DRAWN BY Schoenfeld DATE 11/13/04
CHECKED BY
DESIGN APPROVAL
ENGINEER APPROVAL
SUPVR. APPROVAL
NEXT ASSEMBLY

BROOKHAVEN NATIONAL LABORATORY
UPTON, N.Y. 11973
CONTROLS WIRING DIAGRAM
BLDG HITL1, CFE-HITL1-VME
VMIC 1160A-403D WIRING (C)
SIZE D
TALCOVE_HITL_47
DRAWING NUMBER
REV. A
MATERIAL: ——— SCALE: FULL WEIGHT: – SHEET 47

*AUTOCAD

Schoenfeld, Controls 11/8/2004 3:46 PM talcove_hitl_48.dwg

BT01 I/O PANEL

BLDG #: HITL1
RACK #: CONTROLS
PANEL #: D

VMIC 2170A-210D
BLDG #: HITL1
RACK #: CONTROLS
CHASSIS ID: CFE-HITL1-VME
SLOT #: 9
A16 BASE ADDRESS: E100

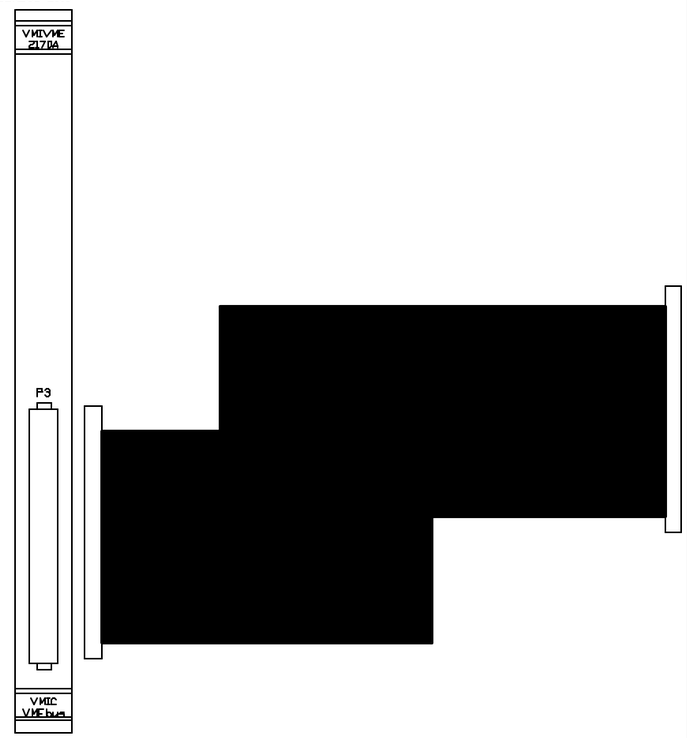

		TYPE OF SIGNAL	WAGO STRIP	NAME OF DEVICE
B	A1	HARP 1 CMD LOW	PIN 2 INST1-1 (5V POS)	TTL.14MW240
B	C1	HARP 1 CMD HI	PIN 1 INST1-1	
B	A2	FC 1 CMD LOW	PIN 4 INST1-1 (5V POS)	TTL.14FC240
B	C2	FC 1 CMD HI	PIN 3 INST1-1	
B	A3	HARP 2 CMD LOW	PIN 2 INST1-2 (5V POS)	TTL.15MW240
B	C3	HARP 2 CMD HI	PIN 1 INST1-2	
B	A4	FC 2 CMD LOW	PIN 4 INST1-2 (5V POS)	TTL.15FC240
B	C4	FC 2 CMD HI	PIN 3 INST1-2	
B	A5	HARP 3 CMD LOW	PIN 2 INST1-3 (5V POS)	TTL.16MW155
B	C5	HARP 3 CMD HI	PIN 1 INST1-3	
B	A6	FC 3 CMD LOW	PIN 4 INST1-3 (5V POS)	TTL.16FC155
B	C6	FC 3 CMD HI	PIN 3 INST1-3	
B	A7	HARP 4 CMD LOW	PIN 2 INST1-4 (5V POS)	TTL.17MW030
B	C7	HARP 4 CMD HI	PIN 1 INST1-4	
B	A8	FC 4 CMD LOW	PIN 4 INST1-4 (5V POS)	TTL.17FC030
B	C8	FC 4 CMD HI	PIN 3 INST1-4	
B	A9	HARP 5 CMD LOW	PIN 2 INST1-5 (5V POS)	TTL.17MW058
B	C9	HARP 5 CMD HI	PIN 1 INST1-5	
B	A10	FC 5 CMD LOW	PIN 4 INST1-5 (5V POS)	TTL.17FC058
B	C10	FC 5 CMD HI	PIN 3 INST1-5	
B	A11	HARP 6 CMD LOW	PIN 2 INST1-6 (5V POS)	TTL.18MW153
B	C11	HARP 6 CMD HI	PIN 1 INST1-6	
B	A12	FC 6 CMD LOW	PIN 4 INST1-6 (5V POS)	TTL.18FC153
B	C12	FC 6 CMD HI	PIN 3 INST1-6	
B	A13			
B	C13			
B	A14			
B	C14			
B	A15			
B	C15			
B	A16	HARP GAIN CMD LOW	PIN 2 8 PIN (5V POS)	
B	C16	HARP GAIN CMD HI	PIN 1 8 PIN	
B	A17	CUP/XFMR GAIN 1 CMD LOW	PIN 4 8 PIN (5V POS)	
B	C17	CUP/XFMR GAIN 1 CMD HI	PIN 3 8 PIN	
B	A18	MODE CMD LOW	5 VOLT NEG	
B	C18	MODE GAIN CMD HI	V294 INPUT 3	TO SHEET 44
B	A19	CUP/XFMR GAIN 2 CMD LOW	PIN 6 8 PIN (5V POS)	
B	C19	CUP/XFMR GAIN 2 CMD HI	PIN 5 8 PIN	
B	A20			
B	C20			
B	A21			
B	C21			
B	A22			
B	C22			
B	A23			
B	C23			
B	A24			
B	C24			
B	A25			
B	C25			
B	A26			
B	C26			
B	A27			
B	C27			
B	A28			
B	C28			
B	A29			
B	C29			
B	A30			
B	C30			
B	A31			
B	C31			
B	A32			
B	C32			

JUMPER SETTING:
ADDRESS: E100
A2-A7=IN
A8=OUT
A9-A12=IN
A13-A15=OUT
JA1=OUT

-3 -2 -1 QTY REQD	REF DESIGNATION	ITEM NO.	DESCRIPTION	MFG. DWG ACCUM. NO.
INTERPRET IN GENERAL ACCORDANCE WITH ASME Y14.24M-1989	Q.A. CATEGORY A-3	DATE	BROOKHAVEN NATIONAL LABORATORY	
	DRAWN BY Schoenfeld	11/8/04	UPTON, N.Y. 11973	
UNLESS OTHERWISE SPECIFIED DIMENSIONS ARE IN INCHES	CHECKED BY		CONTROLS WIRING DIAGRAM	
DECIMAL TOLERANCES: .X ±.030 .XX ±.015 .XXX ±.005 ANGULAR TOLERANCE ± .5°	DESIGN APPROVAL		BLDG HITL1, CFE-HITL1-VME	
	ENGINEER APPROVAL		VMIC 2170A-210D WIRING	
	SUPVR. APPROVAL		SIZE D	DRAWING NUMBER TALCOVE_HITL_48 REV. A
OUTSTANDING ECN	NA FINISH	BREAK SHARP EDGES MAX. XX MIN. XX	NEXT ASSEMBLY	MATERIAL: —— SCALE: FULL WEIGHT: - SHEET 48

*AUTOCAD

Schoenfeld, Controls 11/8/2004 3:47 PM talcove_hitl_49.dwg

BT01 I/O PANEL

BLDG #: HITL1
RACK #: CONTROLS
PANEL #: E

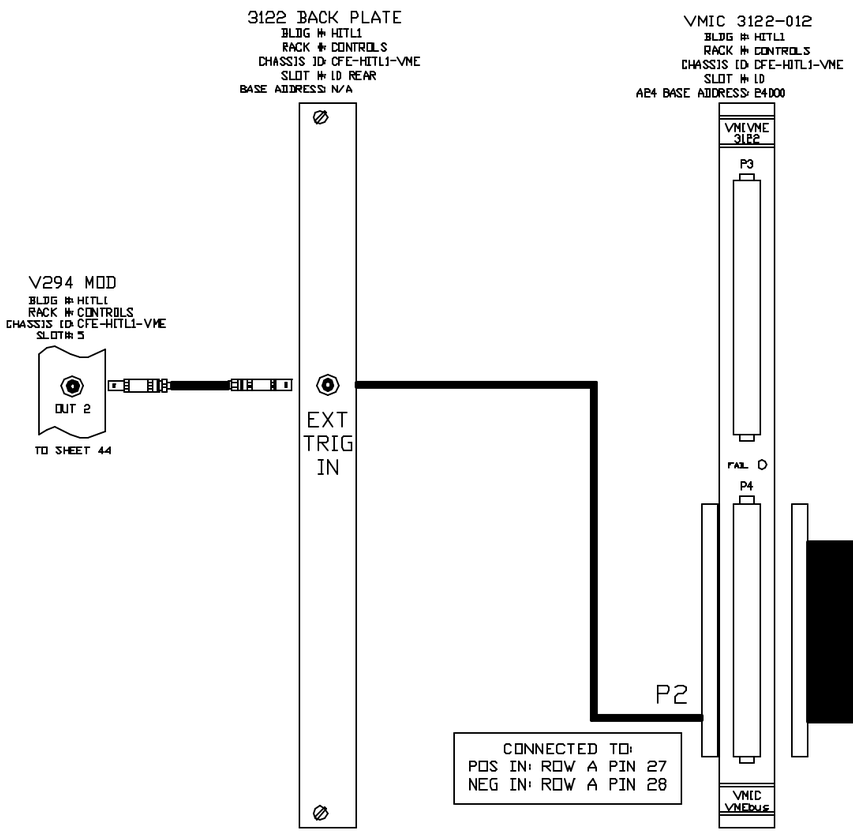

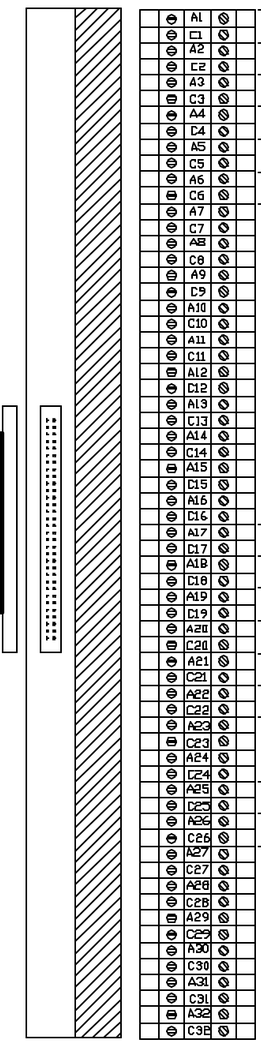

		TYPE OF SIGNAL	36 PIN J6 CONN FROM INSTR CHASSIS	NAME OF SIGNAL
A1	C1	HARP VOLTAGE HI HARP VOLTAGE LOW	PIN 1 CABLE D BLK PIN 32-34 CABLE D SHIELD	TTL.14MW240
A2	C2	HARP VOLTAGE HI HARP VOLTAGE LOW	PIN 2 CABLE D RED PIN 32-34 CABLE D SHIELD	TTL.15MW240
A3	C3	HARP VOLTAGE HI HARP VOLTAGE LOW	PIN 3 CABLE E BLK PIN 32-34 CABLE E SHIELD	TTL.16MW155
A4	C4	HARP VOLTAGE HI HARP VOLTAGE LOW	PIN 4 CABLE E RED PIN 32-34 CABLE E SHIELD	TTL.17MW030
A5	C5	HARP VOLTAGE HI HARP VOLTAGE LOW	PIN 5 CABLE F BLK PIN 32-34 CABLE F SHIELD	TTL.17MW058
A6	C6	HARP VOLTAGE HI HARP VOLTAGE LOW	PIN 6 CABLE F RED PIN 32-34 CABLE F SHIELD	TTL.18MW153
A7	C7			
A8	C8			
A9	C9			
A10	C10			
A11	C11			
A12	C12			
A13	C13			
A14	C14			
A15	C15			
A16	C16			
A17	C17	CUP VOLTAGE HI CUP VOLTAGE LOW	PIN 9 CABLE G BLK PIN 32-34 CABLE G SHIELD	TTL.14FC240
A18	C18	CUP VOLTAGE HI CUP VOLTAGE LOW	PIN 10 CABLE G RED PIN 32-34 CABLE G SHIELD	TTL.15FC240
A19	C19	CUP VOLTAGE HI CUP VOLTAGE LOW	PIN 11 CABLE H BLK PIN 32-34 CABLE H SHIELD	TTL.16FC155
A20	C20	CUP VOLTAGE HI CUP VOLTAGE LOW	PIN 12 CABLE H RED PIN 32-34 CABLE H SHIELD	TTL.17FC030
A21	C21	CUP VOLTAGE HI CUP VOLTAGE LOW	PIN 13 CABLE I BLK PIN 32-34 CABLE I SHIELD	TTL.17FC058
A22	C22	CUP VOLTAGE HI CUP VOLTAGE LOW	PIN 14 CABLE I RED PIN 32-34 CABLE I SHIELD	TTL.18FC153
A23	C23			
A24	C24			
A25	C25	XFORMER VOLT HI XFORMER VOLT LOW	PIN 23 CABLE J RED PIN 32-34 CABLE J SHIELD	16XF150
A26	C26	XFORMER VOLT HI XFORMER VOLT LOW	PIN 24 CABLE J RED PIN 32-34 CABLE J SHIELD	18FX002
A27	C27			
A28	C28			
A29	C29			
A30	C30			
A31	C31			
A32	C32			

JUMPER SETTINGS
ADDRESS 24000
A12-A13=IN
A14=OUT
A15-A16=IN
A17=OUT
A18-A31=IN

REV.	ZONE	ECN NO.	DATE	BY	CHKR	APP.

INTERPRET IN GENERAL ACCORDANCE WITH ASME Y14.24M-1989	Q.A. CATEGORY A-3		BROOKHAVEN NATIONAL LABORATORY
	DRAWN BY Schoenfeld	DATE 11/8/04	UPTON, N.Y. 11973
UNLESS OTHERWISE SPECIFIED DIMENSIONS ARE IN INCHES	CHECKED BY		CONTROLS WIRING DIAGRAM
DECIMAL TOLERANCES .X ±.030 .XX ±.015 .XXX ±.005 ANGULAR TOLERANCE ± .5°	DESIGN APPROVAL		BLDG HITL1, CFE-HITL1-VME
	ENGINEER APPROVAL		3122 BREAKOUT WIRING
	SURVEY APPROVAL		SIZE D — TALCOVE_HITL_49 — REV. A
NA FINISH	BREAK SHARP EDGES MAX. XX MIN. XX	NEXT ASSEMBLY	DRAWING NUMBER
OUTSTANDING ECN			MATERIAL: —— SCALE: FULL WEIGHT: - SHEET 49

*AUTOCAD

Schoenfeld, Controls 11/8/2004 3:47 PM talcove_hitl_50.dwg

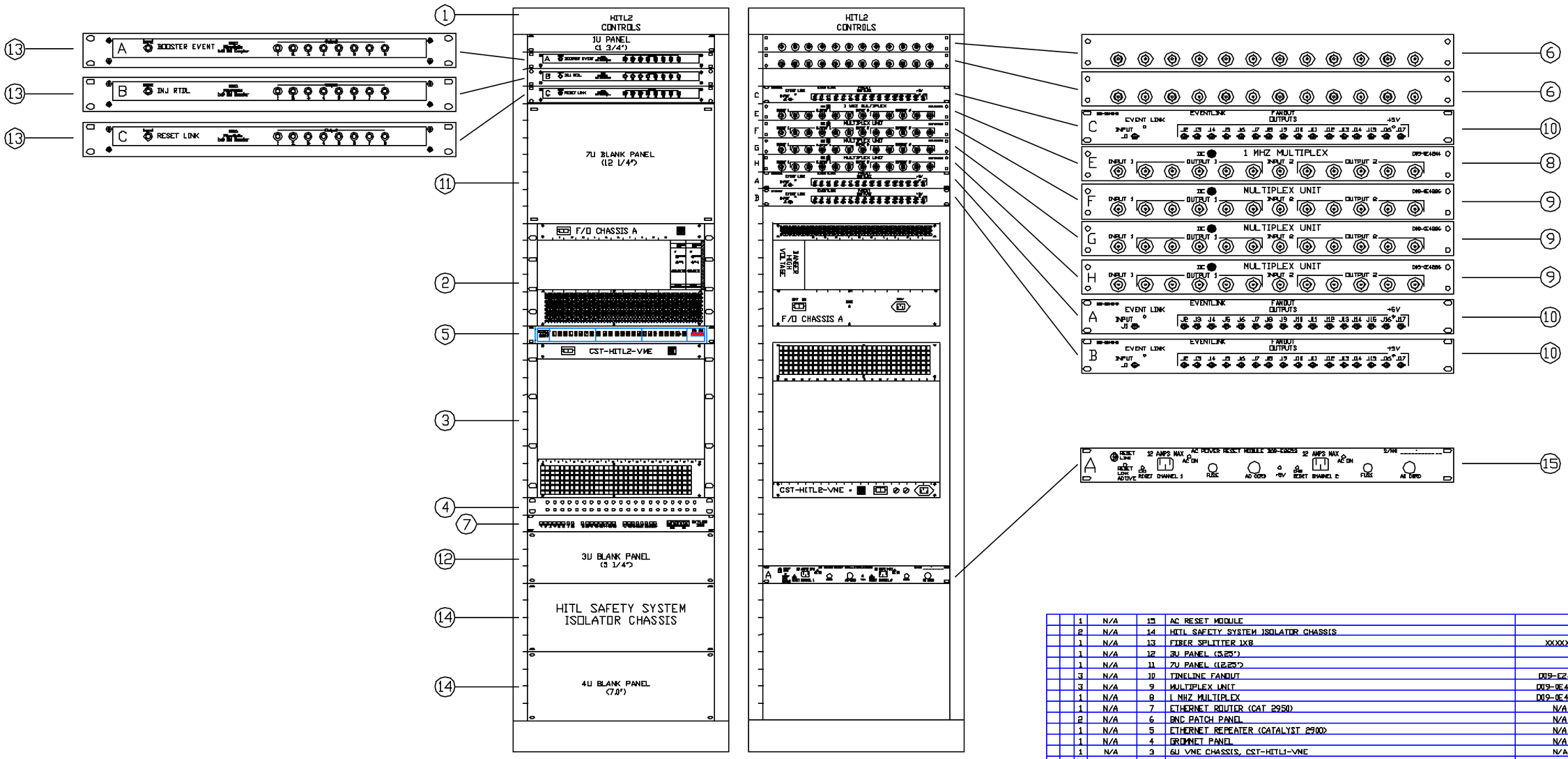

		1	N/A	15	AC RESET MODULE	
		2	N/A	14	HITL SAFETY SYSTEM ISOLATOR CHASSIS	
		1	N/A	13	FIBER SPLITTER 1X8	XXXXXX
		1	N/A	12	3U PANEL (5.25")	
		1	N/A	11	7U PANEL (12.25")	
		3	N/A	10	TIMELINE FANOUT	D019-E2442
		3	N/A	9	MULTIPLEX UNIT	D019-0E4286
		1	N/A	8	1 MHZ MULTIPLEX	D019-0E4244
		1	N/A	7	ETHERNET ROUTER (CAT 2950)	N/A
		2	N/A	6	BNC PATCH PANEL	N/A
		1	N/A	5	ETHERNET REPEATER (CATALYST 2900)	N/A
		1	N/A	4	GROMMET PANEL	N/A
		1	N/A	3	6U VME CHASSIS, CST-HITL1-VME	N/A
		1	N/A	2	FIBER F/O CHASSIS	N/A
		1	HITL 2	1	19" RACK	N/A
-3	-2	-1	REF DESIGNATOR	ITEM NO.	DESCRIPTION	MFG. DWG NO./INT. NO.
QTY REQD						

INTERPRET IN GENERAL ACCORDANCE WITH ASME Y14.24M-1989

UNLESS OTHERWISE SPECIFIED DIMENSIONS ARE IN INCHES

DECIMAL TOLERANCES
.X ±.030
.XX ±.015
.XXX ±.005
ANGULAR TOLERANCE ± .5°

OUTSTANDING ECN

NA FINISH

BREAK SHARP EDGES
MAX. XX MIN. XX

Q.A. CATEGORY A-3

		DATE
DRAWN BY	Schoenfeld	11/23/04
CHECKED BY		
DESIGN APPROVAL		
ENGINEER APPROVAL		
SUPPVR. APPROVAL		

NEXT ASSEMBLY

BROOKHAVEN NATIONAL LABORATORY
UPTON, N.Y. 11973

RACK LAYOUT FOR HITL2
CONTROL SYSTEM
HITL2 CONTROLS RACK

SIZE D | TALCOVE_HITL_50 | REV. A
DRAWING NUMBER

MATERIAL: ——— SCALE: FULL WEIGHT: - SHEET 50

*AUTOCAD

REV.	ZONE	ECN NO.	DATE	BY	CKR	APP.

Schoenfeld, Controls 11/8/2004 3:48 PM talcove_hitl_51.dwg

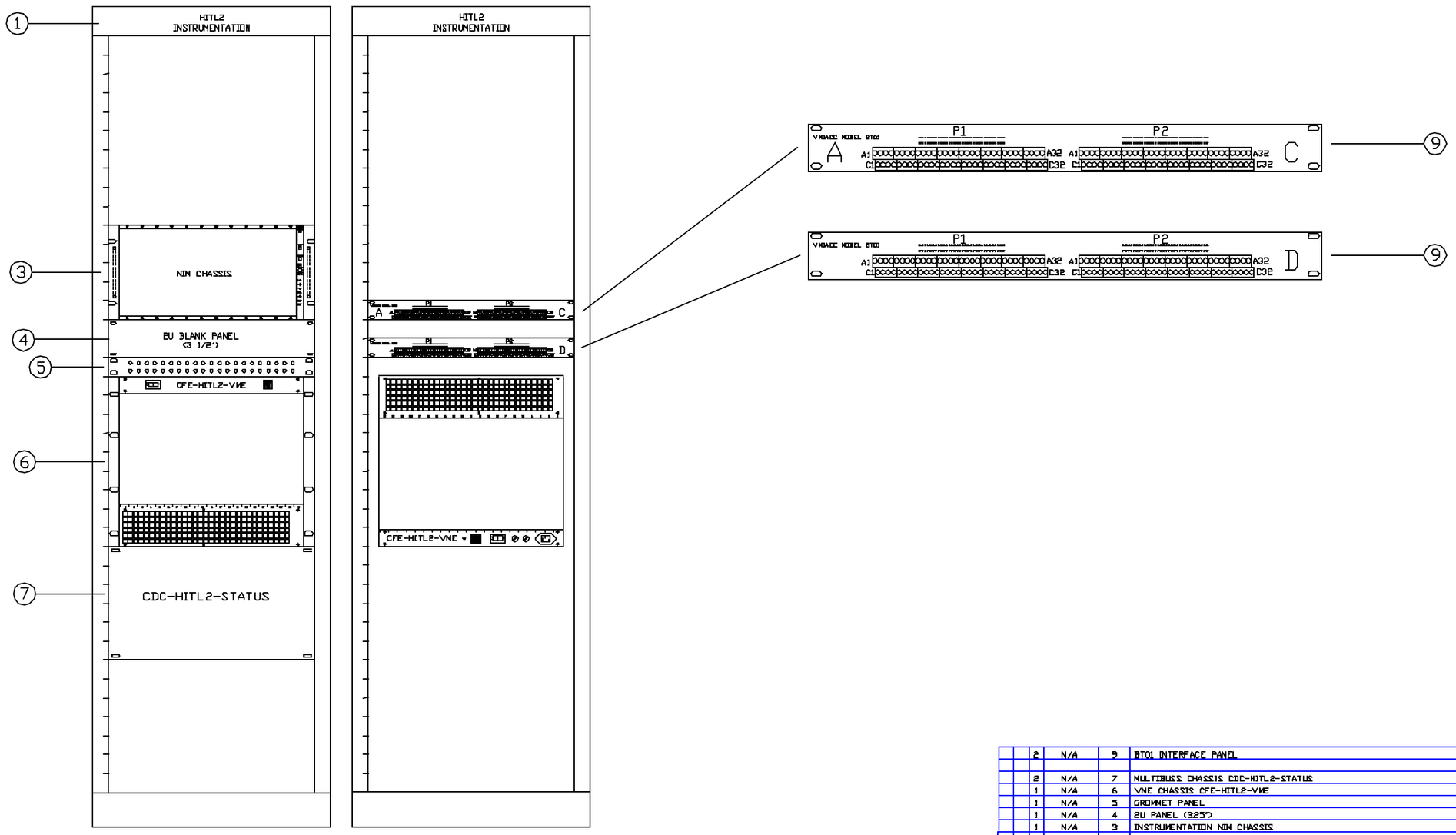

		2	N/A	9	BT01 INTERFACE PANEL	
		2	N/A	7	MULTIBUSS CHASSIS CDC-HITL2-STATUS	
		1	N/A	6	VME CHASSIS CFE-HITL2-VME	N/A
		1	N/A	5	GROMMET PANEL	N/A
		1	N/A	4	2U PANEL (3.25")	
		1	N/A	3	INSTRUMENTATION NIM CHASSIS	N/A
		1	HITL 1	1	19" RACK	N/A
-3	-2	-1	REF DESIGNATION	ITEM NO.	DESCRIPTION	MFG. PART NO./INV. NO.
QTY REQD						

INTERPRET IN GENERAL ACCORDANCE WITH ASME Y14.24M-1989	Q.A. CATEGORY A-3	DATE	BROOKHAVEN NATIONAL LABORATORY
	DRAWN BY Schoenfeld	11/23/04	UPTON, N.Y. 11973
UNLESS OTHERWISE SPECIFIED DIMENSIONS ARE IN INCHES	CHECKED BY		RACK LAYOUT FOR HITL2
DECIMAL TOLERANCES .X ±.030 .XX ±.015 .XXX ±.005 ANGULAR TOLERANCE ± .5°	DESIGN APPROVAL		CONTROL SYSTEM
	ENGINEER APPROVAL		HITL2 INSTRUMENTATION RACK
	SUPVR. APPROVAL		SIZE D — TALCOVE_HITL_51 — REV. A
NA ✓ FINISH — BREAK SHARP EDGES MAX. XX MIN. XX	NEXT ASSEMBLY		DRAWING NUMBER
OUTSTANDING ECN			MATERIAL: — SCALE: FULL WEIGHT: - SHEET 51

*AUTOCAD

Schoenfeld, Controls 11/8/2004 3:48 PM talcove_hitl_52.dwg

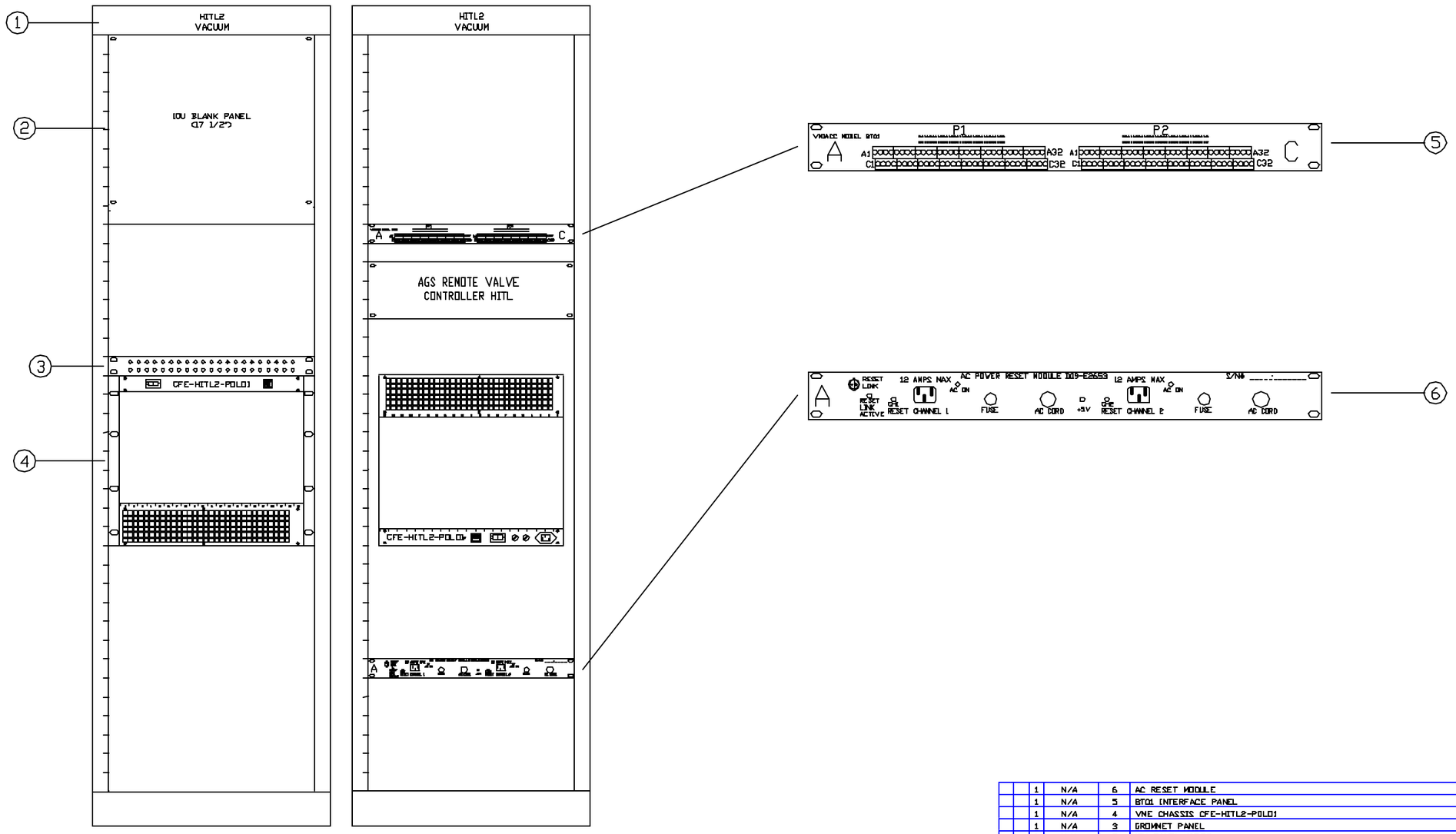

FRONT VIEW

REAR VIEW

-3	-2	-1	REF DESIGNATOR	ITEM NO.	DESCRIPTION	MFG. DWG ADJUN. NO.
		1	N/A	6	AC RESET MODULE	N/A
		1	N/A	5	BT01 INTERFACE PANEL	N/A
		1	N/A	4	VME CHASSIS CFE-HITL2-POL01	
		1	N/A	3	GROMMET PANEL	N/A
		1	N/A	2	IOU PANEL (17.5")	
		1	HITL 2	1	19" RACK	N/A

QTY REQD

INTERPRET IN GENERAL ACCORDANCE WITH ASME Y14.24M-1989

UNLESS OTHERWISE SPECIFIED DIMENSIONS ARE IN INCHES

DECIMAL TOLERANCES
.X ±.030
.XX ±.015
.XXX ±.005
ANGULAR TOLERANCE ± .5°

NA FINISH

BREAK SHARP EDGES
MAX. XX MIN. XX

OUTSTANDING ECN

Q.A. CATEGORY A-3

		DATE
DRAWN BY	Schoenfeld	11/8/04
CHECKED BY		
DESIGN APPROVAL		
ENGINEER APPROVAL		
SUPVR. APPROVAL		

NEXT ASSEMBLY

BROOKHAVEN NATIONAL LABORATORY
UPTON, N.Y. 11973

RACK LAYOUT FOR HITL2
CONTROL SYSTEM
HITL2 INSTRUMENTATION RACK

SIZE D | TALCOVE_HITL_52 | REV. A
DRAWING NUMBER

MATERIAL: ——— SCALE: FULL WEIGHT: - SHEET 52

*AUTOCAD

REV.	ZONE	ECN NO.	DATE	BY	CKR	APP.

Schoenfeld, Controls 11/8/2004 3:49 PM talcove_hitl_53.dwg

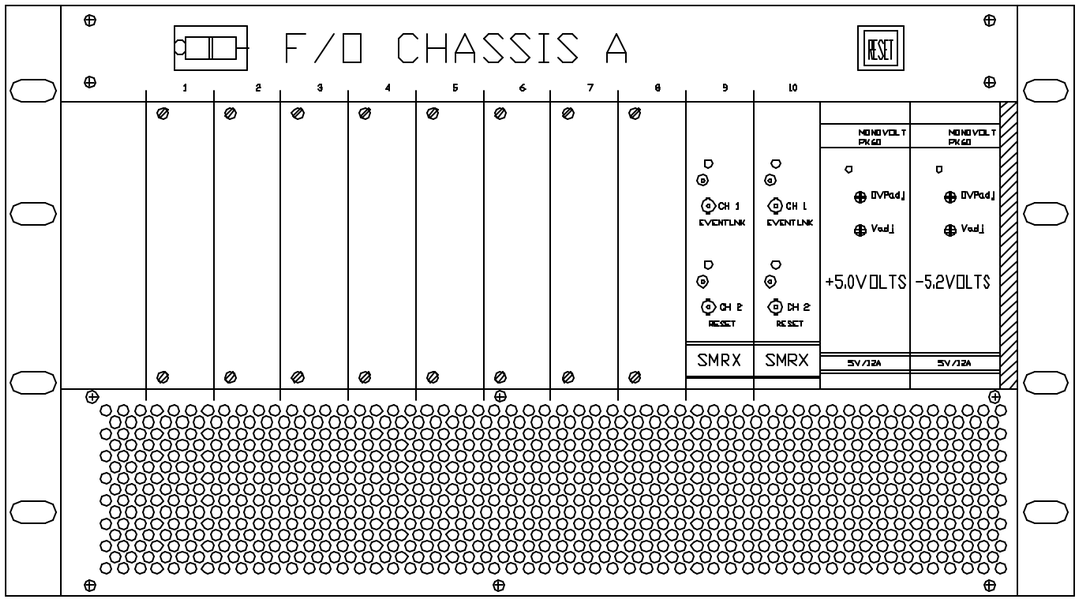

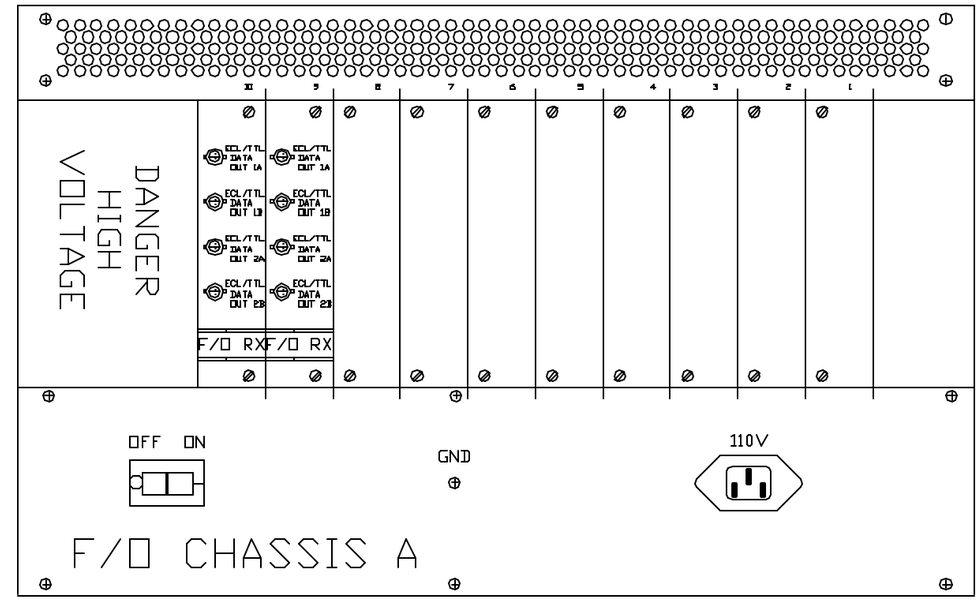

NOTE 1: FILLER PANELS FOR UNUSED SLOTS

		LB	NOTE 1	6	3U X 6HP BLANK PANEL	ESFE-3032
		1	SLOT 12	5	NONOVOLT P.S. -5.2V	X
		1	SLOT 11	4	NONOVOLT P.S. +5V	X
		2	SLOT 9, 10	3	3U FIBER OPTIC TRANSITION MODULE (TTL)	1109-E2542
		2	SLOT 9, 10	2	3U FIBER OPTIC SINGLE MODE RECEIVER	94028101
		1	N/A	1	3U FIBER OPTIC CHASSIS	94028261
-3	-2	-1	REF DESIGNATOR	ITEM NO.	DESCRIPTION	MFG. OR PART NO.
QTY REQD						

INTERPRET IN GENERAL ACCORDANCE WITH ASME Y14.24M-1989	Q.A. CATEGORY A-3	DATE	BROOKHAVEN NATIONAL LABORATORY ASSOCIATED UNIVERSITIES, INC. UPTON, N.Y. 11973
	DRAWN BY Schoenfeld	11/12/04	
UNLESS OTHERWISE SPECIFIED DIMENSIONS ARE IN INCHES	CHECKED BY		CONTROLS WIRING DIAGRAM
DECIMAL TOLERANCES .X ± .030 .XX ± .015 .XXX ± .005 ANGULAR TOLERANCE ± .5°	DESIGN APPROVAL		BLDG HITL2
	ENGINEER APPROVAL		FIBER FANOUT CHASSIS
	SUPVR. APPROVAL		SIZE D — TALCOVE_HITL_53 — REV. A
NA FINISH	BREAK SHARP EDGES MAX. XX MIN. XX	NEXT ASSEMBLY	DRAWING NUMBER
OUTSTANDING ECN			MATERIAL: ——— SCALE: FULL WEIGHT: - SHEET 53

*AUTOCAD

REV.	ZONE	ECN NO.	DATE	BY	CKR	APP.

Schoenfeld, Controls 11/8/2004 3:49 PM talcove_hitl_54.dwg

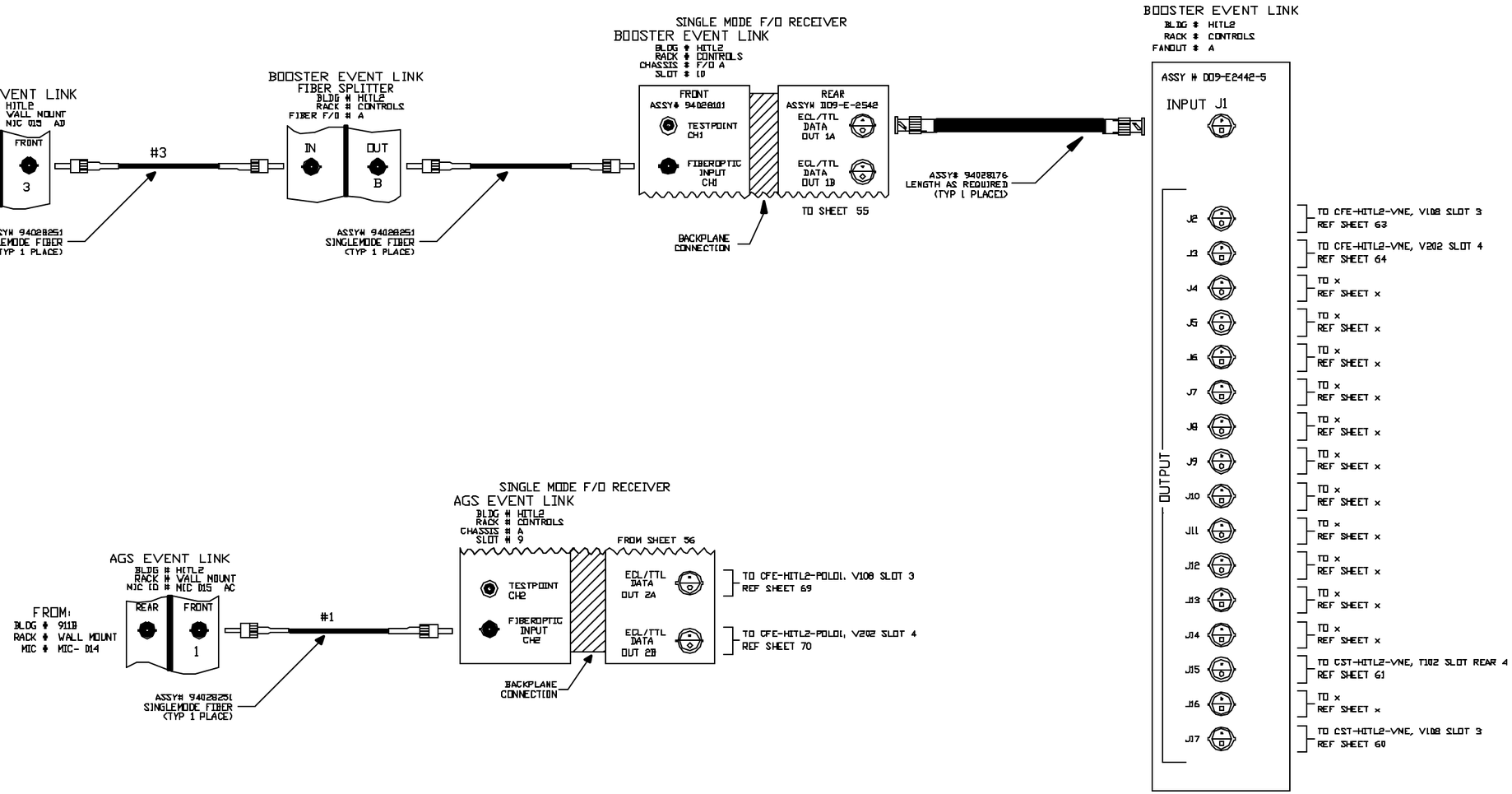

-3	-2	-1	REF DESIGNATION	ITEM NO.	DESCRIPTION	MATL DWG NO.&NO.
QTY REQD						

INTERPRET IN GENERAL ACCORDANCE WITH ASME Y14.24M-1989	Q.A. CATEGORY A-3	DATE	BROOKHAVEN NATIONAL LABORATORY ASSOCIATED UNIVERSITIES, INC. UPTON, N.Y. 11973
	DRAWN BY Schoenfeld	10/25/04	CONTROLS WIRING DIAGRAM
UNLESS OTHERWISE SPECIFIED DIMENSIONS ARE IN INCHES	CHECKED BY		BLDG HITL2
DECIMAL TOLERANCES .X ±.030 .XX ±.015 .XXX ±.005 ANGULAR TOLERANCE ± .5°	DESIGN APPROVAL		BOOSTER EVENT LINK
	ENGINEER APPROVAL R. MICHNOFF	5/13/97	
	SUPVR. APPROVAL		SIZE D — TALCOVE_HITL_54 — REV. A
NA FINISH	BREAK SHARP EDGES MAX. XX MIN. XX	NEXT ASSEMBLY	DRAWING NUMBER
OUTSTANDING ECN			MATERIAL: —— SCALE: NA WEIGHT: - SHEET 54

1 *AUTOCAD

Schoenfeld, Controls 11/8/2004 3:50 PM talcove_hitl_55.dwg

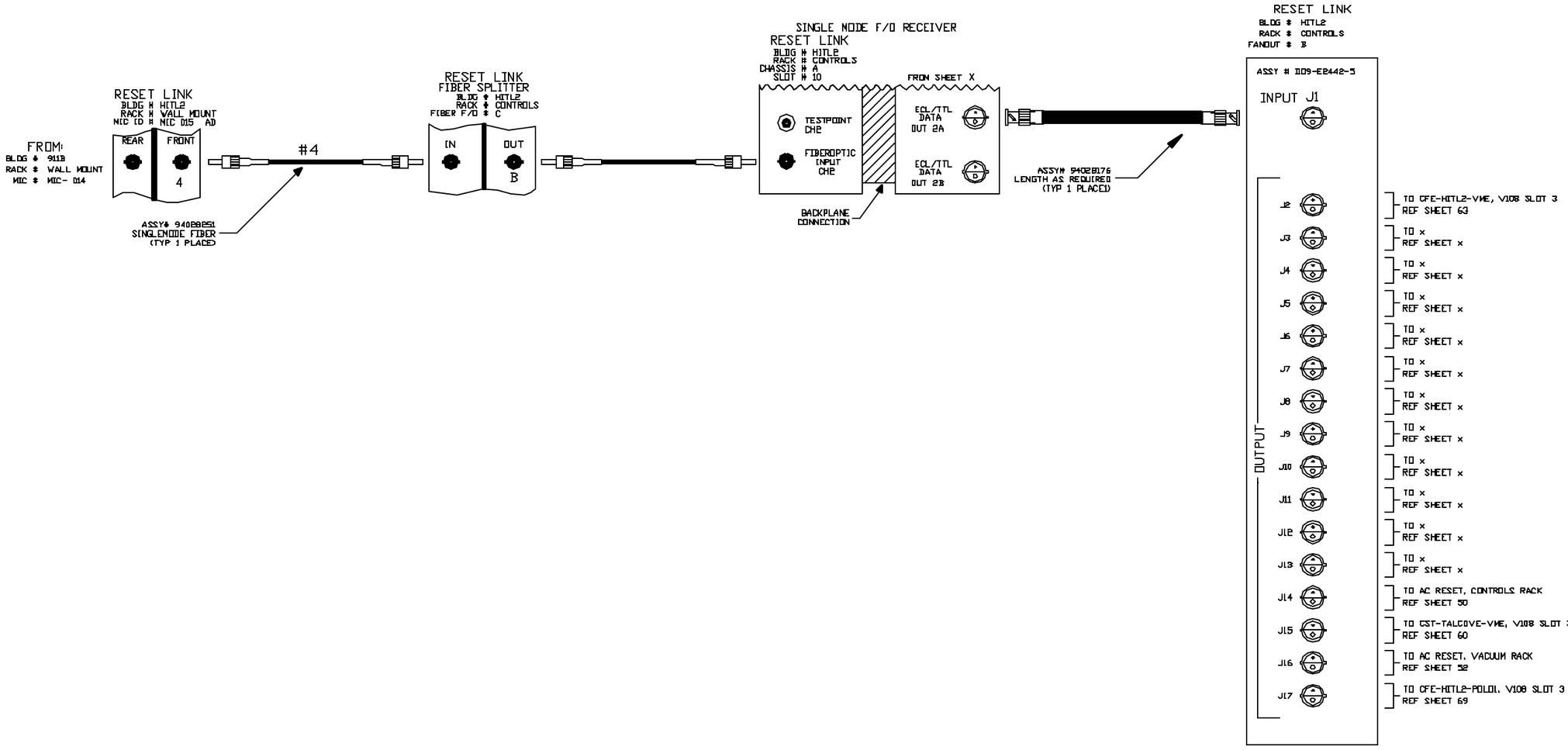

-3 -2 -1 QTY REQD	REF DESIGNATION	ITEM NO.	DESCRIPTION		MAT'L DWG NO.(IN. NO.
	INTERPRET IN GENERAL ACCORDANCE WITH ASME Y14.24M-1989	Q.A. CATEGORY A-3		DATE	BROOKHAVEN NATIONAL LABORATORY ASSOCIATED UNIVERSITIES, INC. UPTON, N.Y. 11973
	UNLESS OTHERWISE SPECIFIED DIMENSIONS ARE IN INCHES	DRAWN BY	Schoenfeld	11/15/04	CONTROLS WIRING DIAGRAM
	DECIMAL TOLERANCES .X ±.030 .XX ±.015 .XXX ±.005 ANGULAR TOLERANCE ± .5°	CHECKED BY			BLDG HITL2
		DESIGN APPROVAL			
		ENGINEER APPROVAL	R. MICHNOFF	5/13/97	RESET LINK
		SUPVR. APPROVAL			
	NA FINISH	BREAK SHARP EDGES MAX. XX MIN. XX	NEXT ASSEMBLY	SIZE D	TALCOVE_HITL_55 REV. A
OUTSTANDING ECN				MATERIAL: ———	SCALE: NA WEIGHT: - SHEET 55

1 *AUTOCAD

Schoenfeld, Controls 11/8/2004 3:51 PM talcove_hitl_56.dwg

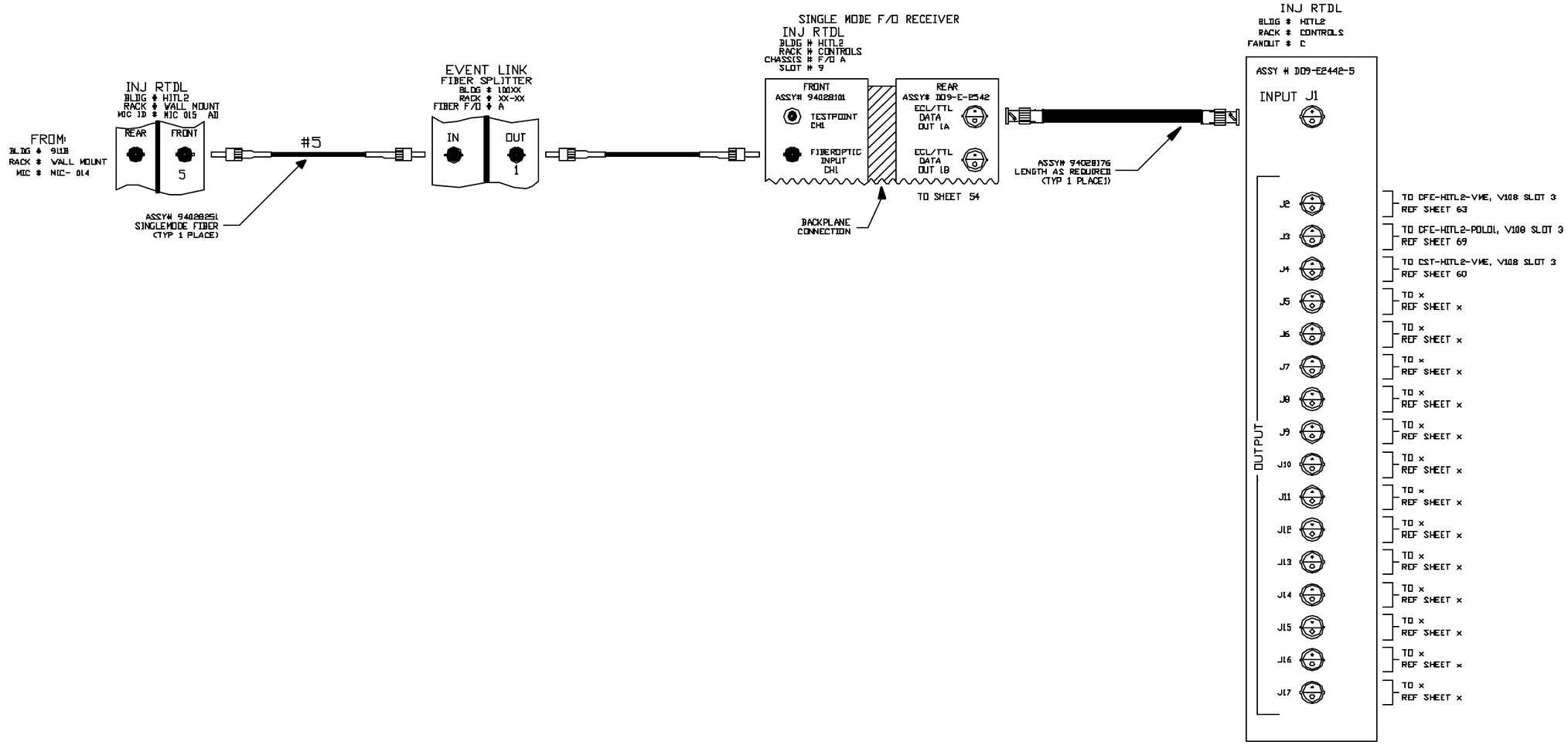

-3	-2	-1	REF DESIGNATION	ECN NO.	DESCRIPTION	MFG. DWG HOLDING NO.
QTY REQD						

INTERPRET IN GENERAL ACCORDANCE WITH ASME Y14.24M-1989

UNLESS OTHERWISE SPECIFIED DIMENSIONS ARE IN INCHES

DECIMAL TOLERANCES
.X ± .030
.XX ± .015
.XXX ± .005
ANGULAR TOLERANCE ± .5°

NA FINISH

BREAK SHARP EDGES
MAX. XX MIN. XX

OUTSTANDING ECN

Q.A. CATEGORY A-3

		DATE
DRAWN BY	Schoenfeld	10/25/04
CHECKED BY		
DESIGN APPROVAL		
ENGINEER APPROVAL	R. MICHNOFF	5/13/97
SUPVR. APPROVAL		

NEXT ASSEMBLY

BROOKHAVEN NATIONAL LABORATORY
ASSOCIATED UNIVERSITIES, INC.
UPTON, N.Y. 11973

CONTROLS WIRING DIAGRAM

BLDG HITL2

INJ RTDL

SIZE D

TALCOVE_HITL_56

DRAWING NUMBER

REV. A

MATERIAL: ——— SCALE: NA WEIGHT: - SHEET 56

1 *AUTOCAD

Schoenfeld, Controls 11/8/2004 3:51 PM talcove_hitl_57.dwg

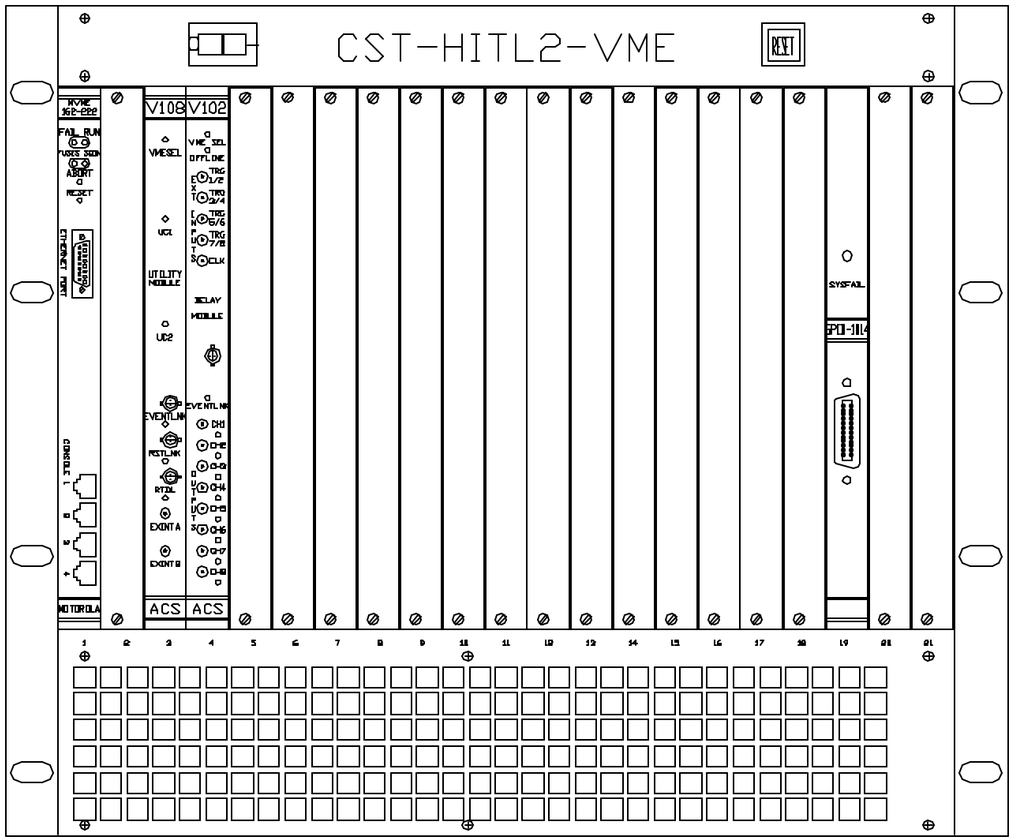

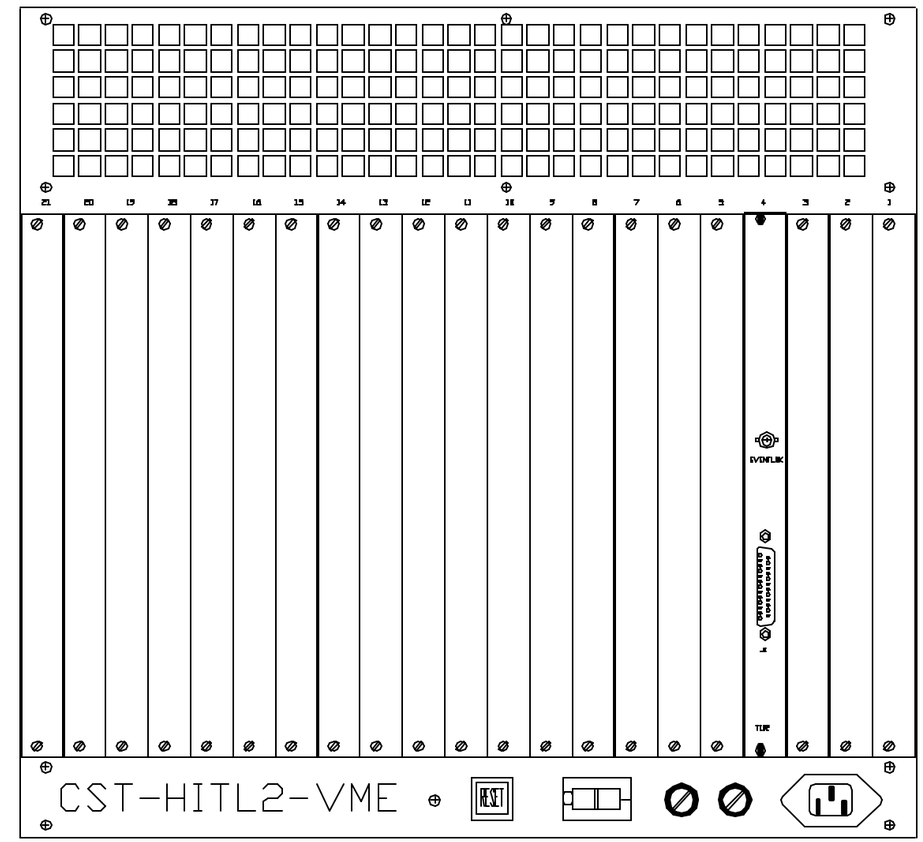

NOTE 1: FOR UNUSED SLOTS

		X	X	X	X	X
		36	NOTE 1	8	6U FILLER PANELS	X
		2	SLOTS 4,5	7	T120 TRANSITION MODULE	X
		2	SLOTS 20,21	6	GPIB 1014	X
		X	X	X	X	X
		1	SLOT 4	4	V104 DECODER MODULE	94028072
		1	SLOT 3	3	V108 UTILITY MODULE	94028094
		1	SLOT 1	2	FRONT END COMPUTER (162-222)	X
		1	N/A	1	6U VME CHASSIS	RHIC-93008100
-3	-2	-1	REF DESIGNATION	ITEM NO.	DESCRIPTION	MANF. PART HOLDING NO.
ANY ASSEM						

INTERPRET IN GENERAL ACCORDANCE WITH ASME Y14.24M-1989

UNLESS OTHERWISE SPECIFIED DIMENSIONS ARE IN INCHES

DECIMAL TOLERANCES
.X ± .030
.XX ± .015
.XXX ± .005
ANGULAR TOLERANCE ± .5°

NA FINISH

BREAK SHARP EDGES
MAX. XX MIN. XX

OUTSTANDING ECN

Q.A. CATEGORY A-3

		DATE
DRAWN BY	Schoenfeld	11/12/04
CHECKED BY		
DESIGN APPROVAL		
ENGINEER APPROVAL		
SURVEY APPROVAL		

NEXT ASSEMBLY

BROOKHAVEN NATIONAL LABORATORY
ASSOCIATED UNIVERSITIES, INC.
UPTON, N.Y. 11973

CONTROLS WIRING DIAGRAM

BLDG HITL2

VME CHASSIS CST-HITL2-VME

SIZE

TALCOVE_HITL_57

DRAWING NUMBER

REV.

MATERIAL: SCALE: WEIGHT: SHEET 57

*AUTOCAD

Schoenfeld, Controls 11/8/2004 3:51 PM talcove_hitl_58.dwg

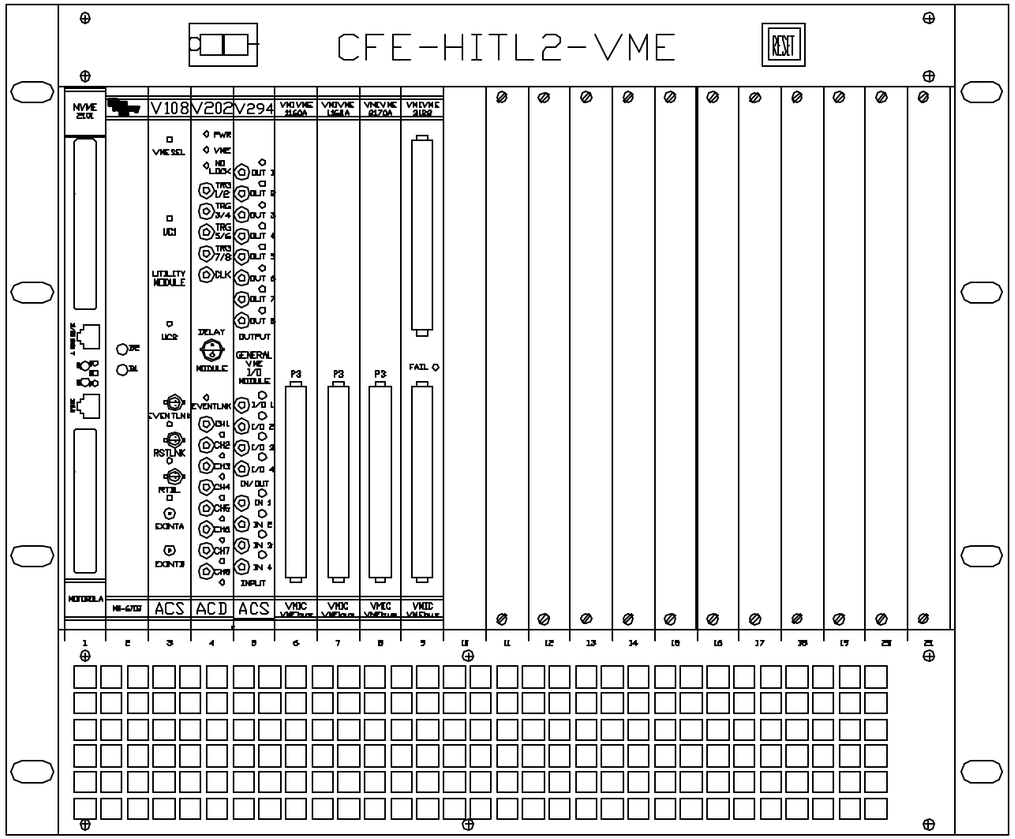

FRONT VIEW

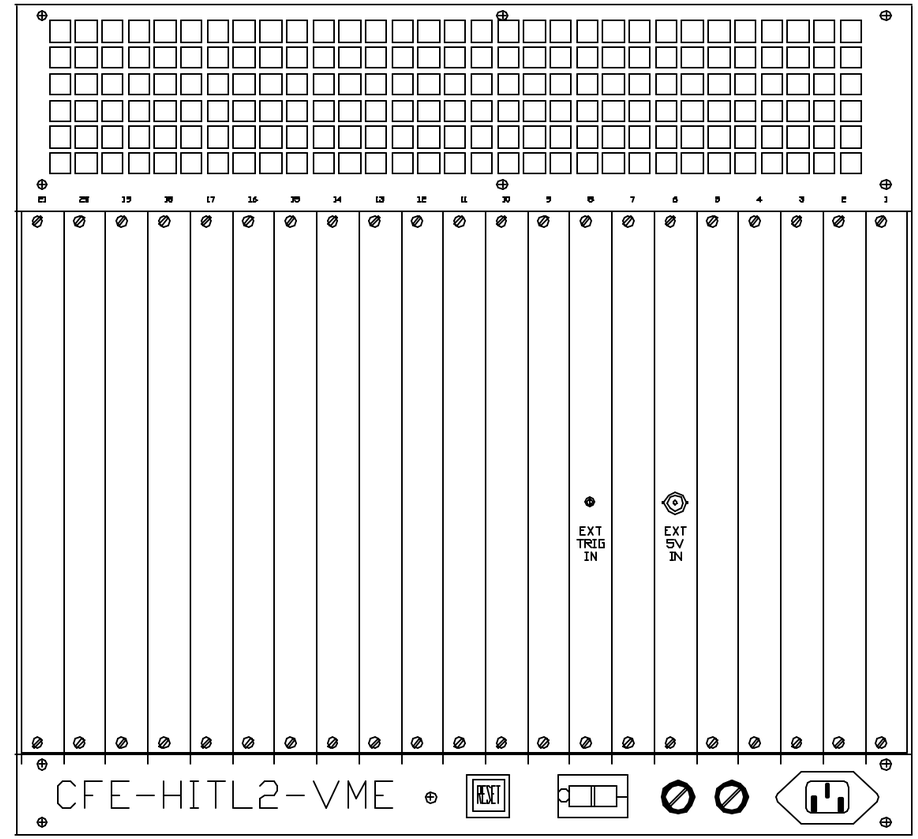

REAR VIEW

NOTE:

1. ALL UNUSED SLOTS, FRONT AND REAR

		30	see note 1	11	VME BLANK PANEL (ELECTRO SPACE ESFE-29B50)	
		1	SLOT 10	10	VMIVME 3122-012 16 BIT ADC	
		1	SLOT 9	9	VMIVME 2170A-P10D DIGITAL OUTPUT	
		1	SLOT 8	8	VMIVME 1160A-403D DIGITAL INPUT	
		2	SLOT 6,7	7	VMIVME 1160A-2001 DIGITAL INPUT	
		1	SLOT 5	6	V294 GEN I/O MODULE	
		1	SLOT 4	5	V202 EVENT DELAY MODULE	
		1	SLOT 3	4	V108 UTILITY MODULE	94028094
		1	SLOT 2	3	NM-6702C MEMORY MODULE	
		1	SLOT 1	2	FRONT END COMPUTER	NVME2101-1
		1	N/A	1	VME CHASSIS	RHIC-93008000
-3	-2	-1	REF DESIGNATOR	ITEM NO.	DESCRIPTION	MFG. DWG NO./PN NO.
QTY REQD						

INTERPRET IN GENERAL ACCORDANCE WITH ASME Y14.24M-1989

UNLESS OTHERWISE SPECIFIED DIMENSIONS ARE IN INCHES

DECIMAL TOLERANCES
.X ± .030
.XX ± .015
.XXX ± .005
ANGULAR TOLERANCE ± 1°

OUTSTANDING ECN

NA / FINISH

BREAK SHARP EDGES
MAX. XX MIN. XX

Q.A. CATEGORY A-3

		DATE
DRAWN BY	Schoenfeld	11/23/04
CHECKED BY		
DESIGN APPROVAL		
ENGINEER APPROVAL		
SUPVR. APPROVAL		

NEXT ASSEMBLY

BROOKHAVEN NATIONAL LABORATORY
ASSOCIATED UNIVERSITIES, INC.
UPTON, N.Y. 11973

CONTROLS WIRING DIAGRAM

BLDG HITL2

VME CHASSIS CFE-HITL2-VME

SIZE D | TALCOVE_HITL_58 | REV. A

DRAWING NUMBER

MATERIAL: ——— SCALE: NA WEIGHT: – SHEET 58

*AUTOCAD

Schoenfeld, Controls 11/8/2004 3:52 PM talcove_hitl_59.dwg

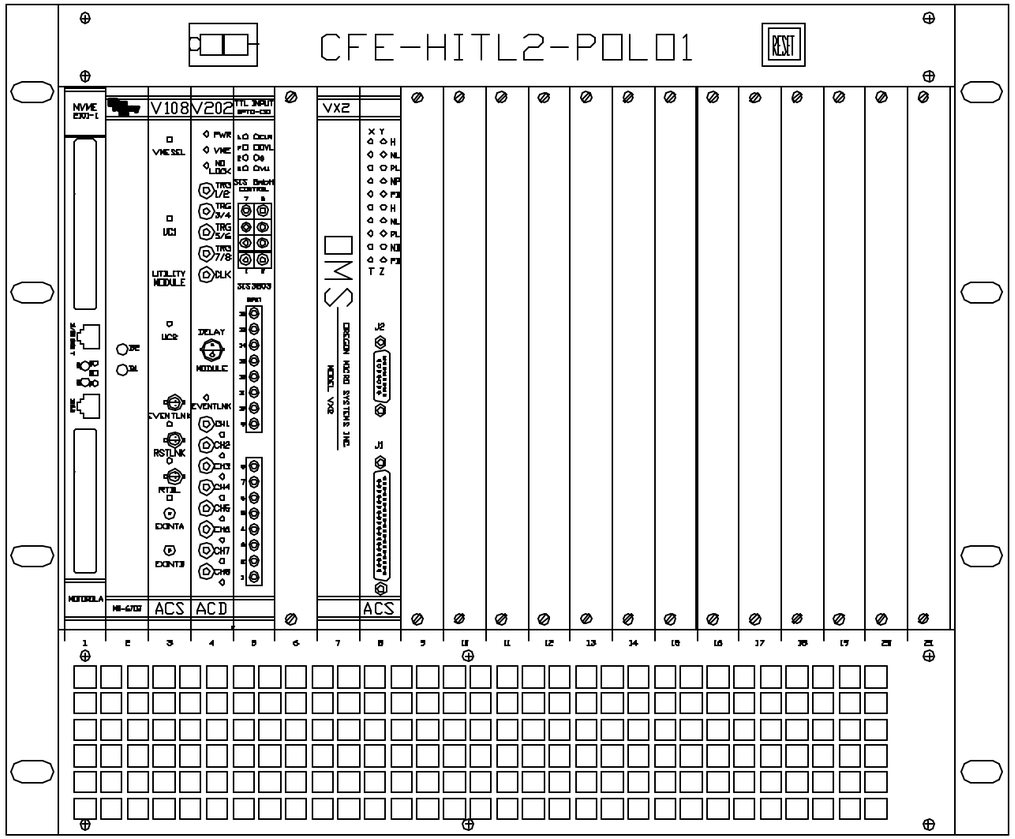

FRONT VIEW

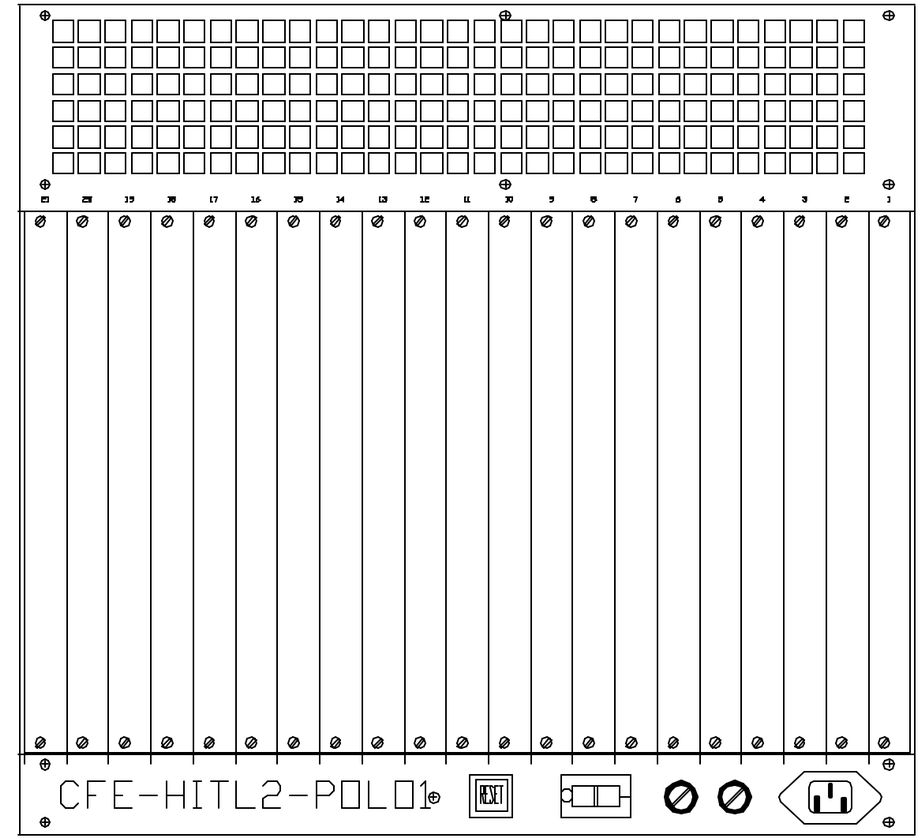

REAR VIEW

NOTE:

1. ALL UNUSED SLOTS, FRONT AND REAR

QTY REQD	REF DESIGNATOR	ITEM NO.	DESCRIPTION	MFG. DWG NO./PN NO.
1	SLOT 8	8	4 AXIS STEPPER TRANSITION MODULE	
2	SLOT 7	7	OMS VX2-020 ENCODER/STEP MOTOR CNT	
1	SLOT 5	6	SIS 3803 SCALER MODULE	
1	SLOT 4	5	V202 EVENT DELAY MODULE	
1	SLOT 3	4	V108 UTILITY MODULE	94028094
1	SLOT 2	3	NM-6702C MEMORY MODULE	
1	SLOT 1	2	FRONT END COMPUTER	NVME2101-1
1	N/A	1	VME CHASSIS	RHIC-93008000

INTERPRET IN GENERAL ACCORDANCE WITH ASME Y14.24M-1989

UNLESS OTHERWISE SPECIFIED DIMENSIONS ARE IN INCHES

DECIMAL TOLERANCES
.X ±.030
.XX ±.015
.XXX ±.005
ANGULAR TOLERANCE ± 1°

OUTSTANDING ECN: NA

FINISH: BREAK SHARP EDGES MAX. XX MIN. XX

Q.A. CATEGORY A-3

		DATE
DRAWN BY	Schoenfeld	11/23/04
CHECKED BY		
DESIGN APPROVAL		
ENGINEER APPROVAL		
SUPVR. APPROVAL		

NEXT ASSEMBLY

BROOKHAVEN NATIONAL LABORATORY
ASSOCIATED UNIVERSITIES, INC.
UPTON, N.Y. 11973

CONTROLS WIRING DIAGRAM

BLDG HITL2

VME CHASSIS CFE-HITL2-POL01

SIZE D — TALCOVE_HITL_59 — REV. A

DRAWING NUMBER

MATERIAL: ——— SCALE: NA WEIGHT: – SHEET 59

*AUTOCAD

Schoenfeld, Controls 11/8/2004 3:52 PM talcove_hitl_60.dwg

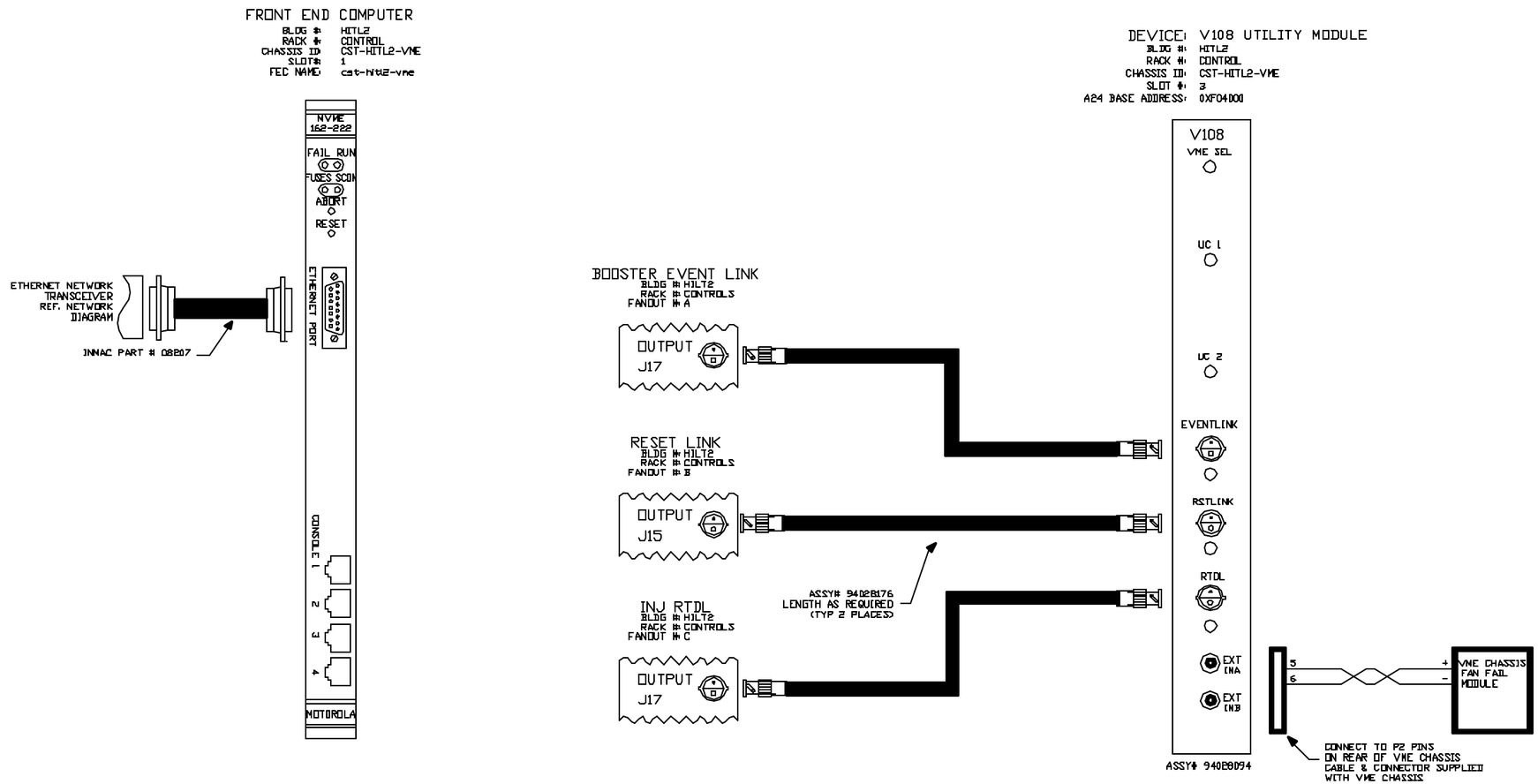

JUMPER LIST

E25 through E50 are configured for remote reset address at the time of board acceptance test.
DO NOT MODIFY!

Remote reset pulls VME SYS Reset.
E58-E60, E59-E61

A24 BASE ADDRESS= 4000H
E1-E13, E2-E14, E3-E15, E4-E16, E5-E17, E6-E18
E7-E19, E8-E20, E9-E21, E10-E22, E11-E24, E57-E23
SW1=OPEN
SW2=CLOSED
SW3=OPEN
SW4=OPEN

-3	-2	-1	REF DESIGNATION	ITEM NO.	DESCRIPTION	MAT'L DWG NO./ITM. NO.
QTY REQD						

INTERPRET IN GENERAL ACCORDANCE WITH ASME Y14.24M-1989

UNLESS OTHERWISE SPECIFIED DIMENSIONS ARE IN INCHES

DECIMAL TOLERANCES
.X ±.030
.XX ±.015
.XXX ±.005
ANGULAR TOLERANCE ± .5°

OUTSTANDING ECN: NA

BREAK SHARP EDGES MAX. XX MIN. XX

Q.A. CATEGORY A-3

		DATE
DRAWN BY	Schoenfeld	11/8/04
CHECKED BY		
DESIGN APPROVAL		
ENGINEER APPROVAL		
SUPVR. APPROVAL		

NEXT ASSEMBLY

BROOKHAVEN NATIONAL LABORATORY
ASSOCIATED UNIVERSITIES, INC.
UPTON, N.Y. 11973

CONTROLS WIRING DIAGRAM

HITL2, CHASSIS CST-HITL2-VME

FT END COMP/V108 UTIL MODULE

SIZE D — TALCOVE_HITL_60 — REV. A

DRAWING NUMBER

MATERIAL: — SCALE: NA WEIGHT: - SHEET 60

*AUTOCAD

Schoenfeld, Controls 11/8/2004 3:53 PM talcove_hitl_61.dwg

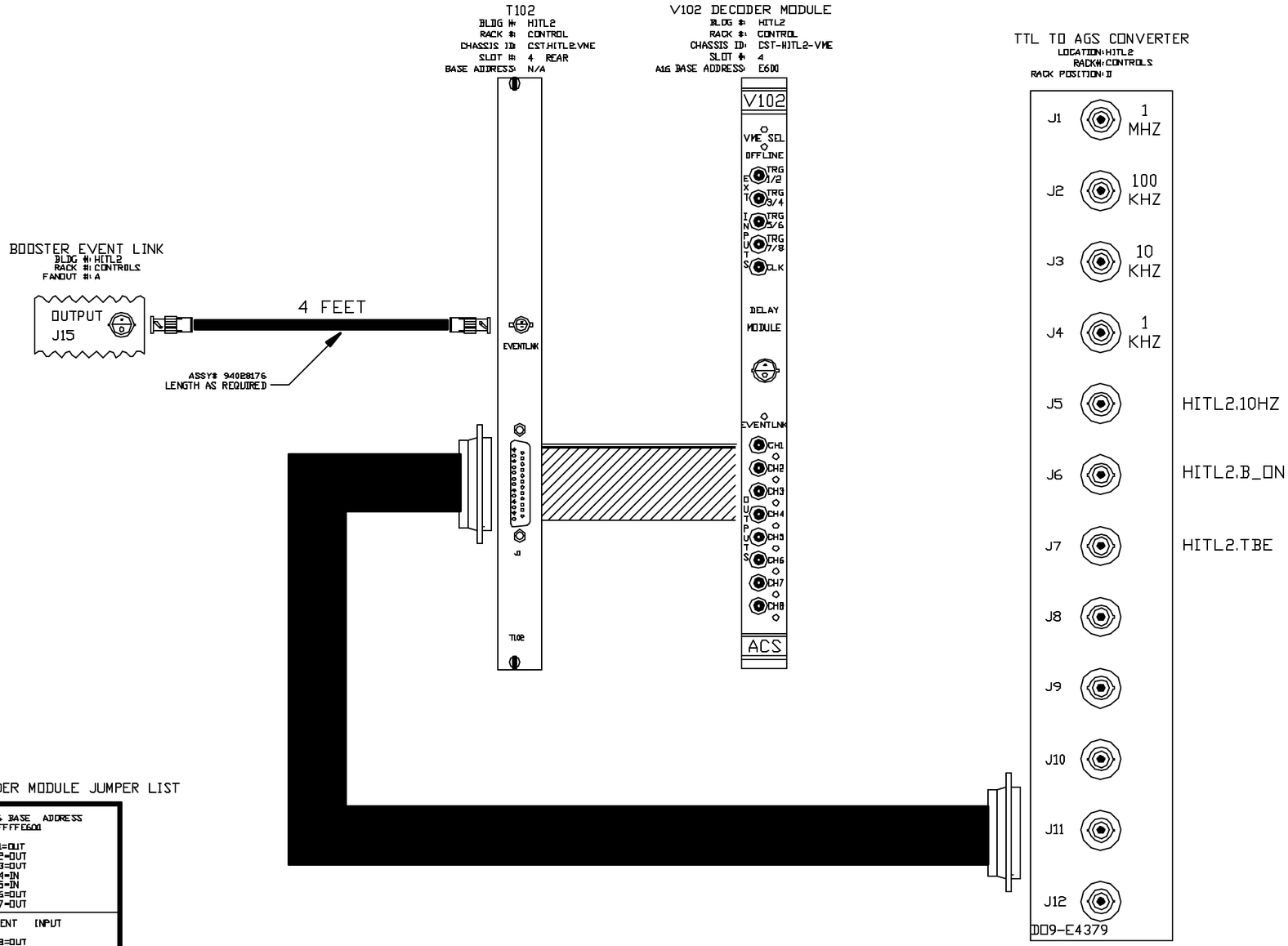

V102 DECODER MODULE JUMPER LIST

A16 BASE ADDRESS 0XFFFFE600 JP1=OUT JP2=OUT JP3=OUT JP4=IN JP5=IN JP6=OUT JP7=OUT
EVENT INPUT JP8=OUT JP9=IN JP10=IN
JP11=IN JP12=OUT JP13=OUT JP14=IN

REV.	ZONE	ECN NO.	DATE	BY	CKR	APP.

INTERPRET IN GENERAL ACCORDANCE WITH ASME Y14.24M-1989	Q.A. CATEGORY A-3	DATE	BROOKHAVEN NATIONAL LABORATORY ASSOCIATED UNIVERSITIES, INC. UPTON, N.Y. 11973
UNLESS OTHERWISE SPECIFIED DIMENSIONS ARE IN INCHES	DRAWN BY Schoenfeld	11/18/04	CONTROLS WIRING DIAGRAM
DECIMAL TOLERANCES .X ±.030 .XX ±.015 .XXX ±.005 ANGULAR TOLERANCE ± .5°	CHECKED BY		BLDG HITL2, CST-HITL2-VME
	DESIGN APPROVAL		V102 DECODER MODULE
	ENGINEER APPROVAL		
	SURVEY APPROVAL		SIZE D — TALCOVE_HITL_61 — REV. A
NA FINISH	BREAK SHARP EDGES MAX. XX MIN. XX	NEXT ASSEMBLY	DRAWING NUMBER
OUTSTANDING ECN			MATERIAL: — SCALE: NA WEIGHT: - SHEET 61

*AUTOCAD

REV.	ZONE	ECN NO.	DATE	BY	CKR	APP.

Schoenfeld, Controls 11/8/2004 3:53 PM talcove_hitl_62.dwg

GPIB 1014 FOR 488 DEVICE CONTROLLERS

BLDG #: HITL2
RACK #: CONTROL
CHASSIS ID: CST-HITL2-VME
SLOT #: 19
A24 BASE ADDRESS: 0XF0002000

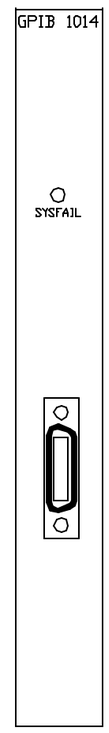

-3	-2	-1	REF DESIGNATOR	ECN NO.	DESCRIPTION	MFG. DWG NO.&nbs. NO.
QTY REQD						

INTERPRET IN GENERAL ACCORDANCE WITH ASME Y14.24M-1989

UNLESS OTHERWISE SPECIFIED DIMENSIONS ARE IN INCHES

DECIMAL TOLERANCES
.X ±.030
.XX ±.015
.XXX ±.005
ANGULAR TOLERANCE ±.5°

NA FINISH

BREAK SHARP EDGES
MAX. XX MIN. XX

OUTSTANDING ECN

Q.A. CATEGORY A-3

		DATE
DRAWN BY	Schoenfeld	11/23/04
CHECKED BY		
DESIGN APPROVAL		
ENGINEER APPROVAL		
SUPVR. APPROVAL		

NEXT ASSEMBLY

BROOKHAVEN NATIONAL LABORATORY
ASSOCIATED UNIVERSITIES, INC.
UPTON, N.Y. 11973

CONTROLS WIRING DIAGRAM

BLDG. HITL2, CST-HITL2-VME

GPIB INTER FOR DEVICE CNTRLS

SIZE

TALCOVE_HITL_62

DRAWING NUMBER

REV.

MATERIAL: ——— SCALE: NA WEIGHT: – SHEET 62

*AUTOCAD

Schoenfeld, Controls 11/8/2004 3:54 PM talcove_hitl_63.dwg

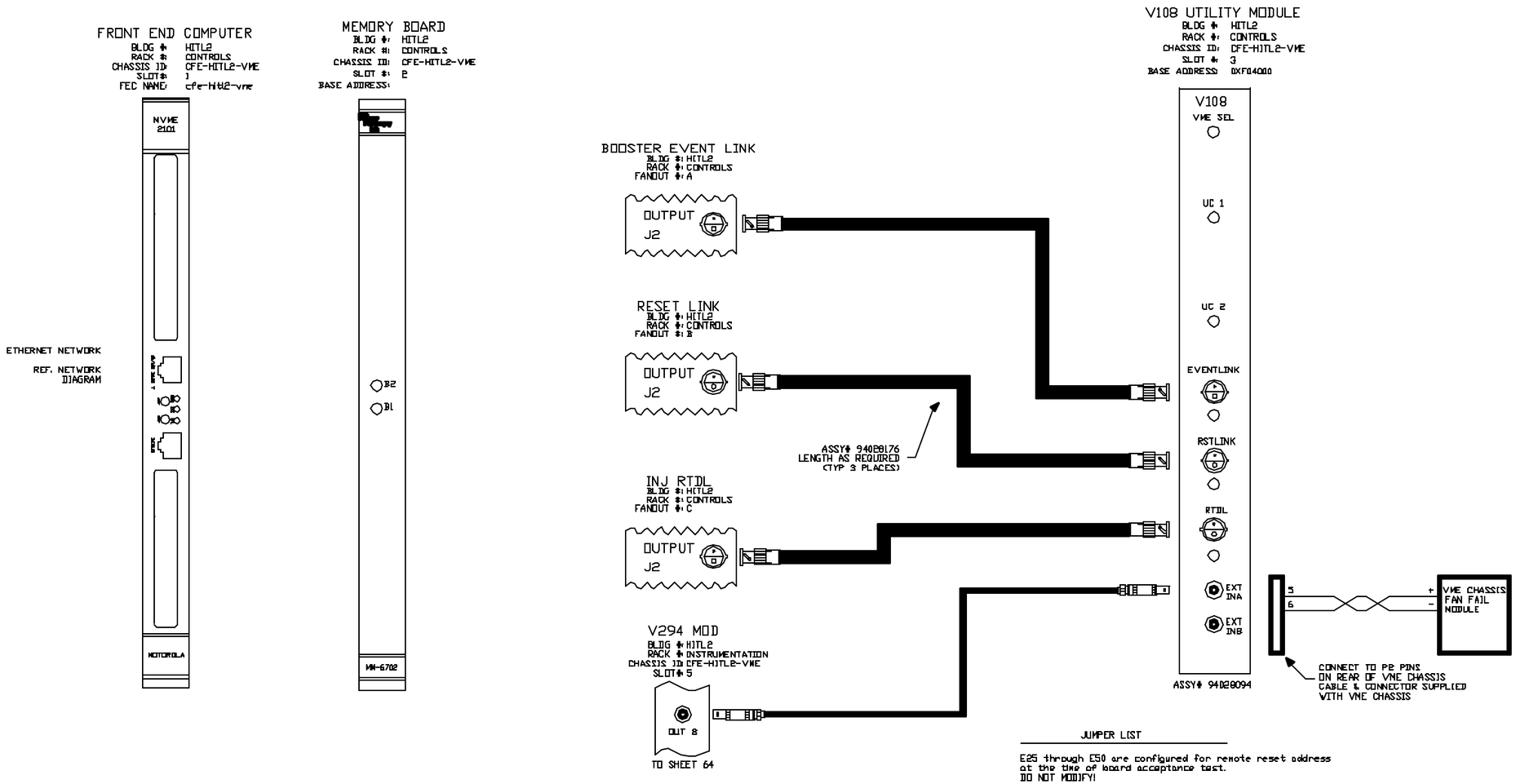

JUMPER LIST

E25 through E50 are configured for remote reset address at the time of board acceptance test.
DO NOT MODIFY!

Remote reset pulls VME SYS Reset.
E58-E60, E59-E61

A24 BASE ADDRESS= 4000h
E1-E13, E2-E14, E3-E15, E4-E16, E5-E17, E6-E18
E7-E19, E8-E20, E9-E21, E10-E22, E11-E24, E57-E63
SW1=OPEN
SW2=CLOSED
SW3=OPEN
SW4=OPEN

INTERPRET IN GENERAL ACCORDANCE WITH ASME Y14.24M-1989	Q.A. CATEGORY A-3	DATE	BROOKHAVEN NATIONAL LABORATORY UPTON, N.Y. 11973
UNLESS OTHERWISE SPECIFIED DIMENSIONS ARE IN INCHES	DRAWN BY Schoenfeld	11/8/04	CONTROLS WIRING DIAGRAM
DECIMAL TOLERANCES .X ±.030 .XX ±.015 .XXX ±.005 ANGULAR TOLERANCE ± .5°	CHECKED BY		BLDG HITL2, CHASSIS CFE-HITL2-VME
	DESIGN APPROVAL		FT END COMP /V108 UTIL MODULE
	ENGINEER APPROVAL		
	SUPVR. APPROVAL		SIZE D — TALCOVE_HITL_63 — REV. A
NA FINISH	BREAK SHARP EDGES MAX. XX MIN. XX	NEXT ASSEMBLY	DRAWING NUMBER
OUTSTANDING ECN			MATERIAL: ——— SCALE: FULL WEIGHT: - SHEET 63

*AUTOCAD

Schoenfeld, Controls 11/8/2004 3:54 PM talcove_hitl_64.dwg

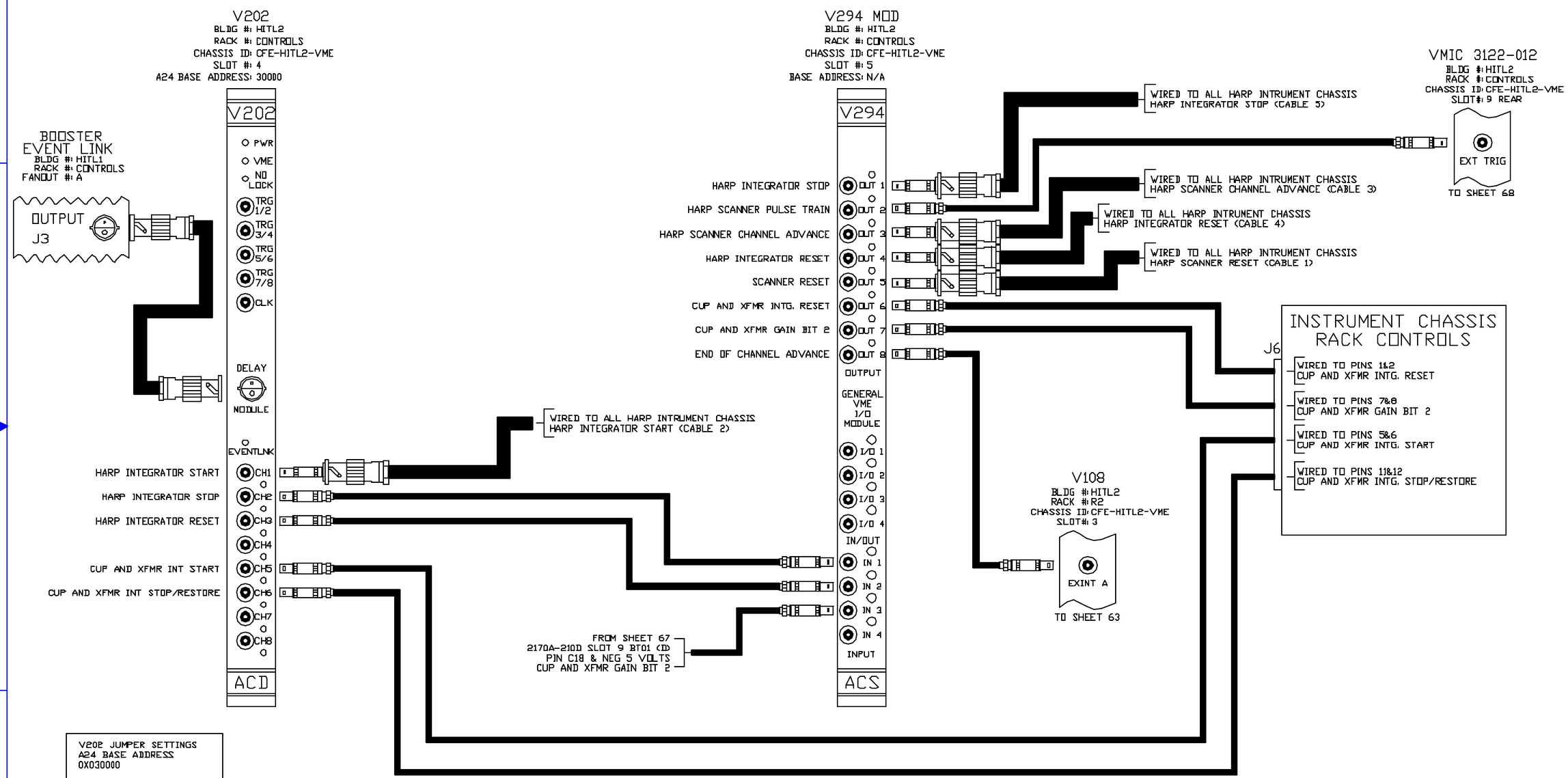

V202 JUMPER SETTINGS
A24 BASE ADDRESS
0X030000

SW1	JP1=IN
A16=1	JP2=PIN 1 TO 2
A17=1	JP3=IN
A18=0	JP4=OUT
A19=0	JP5=OUT
A20=0	JP6=OUT
A21=0	JP7=OUT
A22=0	JP8=OUT
A23=0	JP9=OUT
	JP10=IN
	JP11,12,13=IN

REV.	ZONE	ECN NO.	DATE	BY	CHK'R	APP.

INTERPRET IN GENERAL ACCORDANCE WITH ASME Y14.24M-1989	Q.A. CATEGORY A-3	DATE	BROOKHAVEN NATIONAL LABORATORY UPTON, N.Y. 11973
UNLESS OTHERWISE SPECIFIED DIMENSIONS ARE IN INCHES	DRAWN BY Schoenfeld	10/13/04	CONTROLS WIRING DIAGRAM
DECIMAL TOLERANCES .X ±.030 .XX ±.015 .XXX ±.005 ANGULAR TOLERANCE ± .5°	CHECKED BY / DESIGN APPROVAL / ENGINEER APPROVAL / SUPVR. APPROVAL		BLDG HITL2, CFE-HITL2-VME
			V202 AND V294 WIRING DIAGRAM
NA FINISH	BREAK SHARP EDGES MAX. XX MIN. XX	NEXT ASSEMBLY	SIZE D — DRAWING NUMBER TALCOVE_HITL_64 — REV. A
OUTSTANDING ECN			MATERIAL: — SCALE: FULL WEIGHT: - SHEET 64

*AUTOCAD

Schoenfeld, Controls 11/8/2004 3:55 PM talcove_hitl_65.dwg

BT01 I/O PANEL

BLDG #: HITL2
RACK #: CONTROLS
PANEL #: A

VMIC 1160A-200D (A)
BLDG #: HITL2
RACK #: CONTROLS
CHASSIS ID: CFE-HITL2-VME
SLOT #: 6
A16 BASE ADDRESS: E000

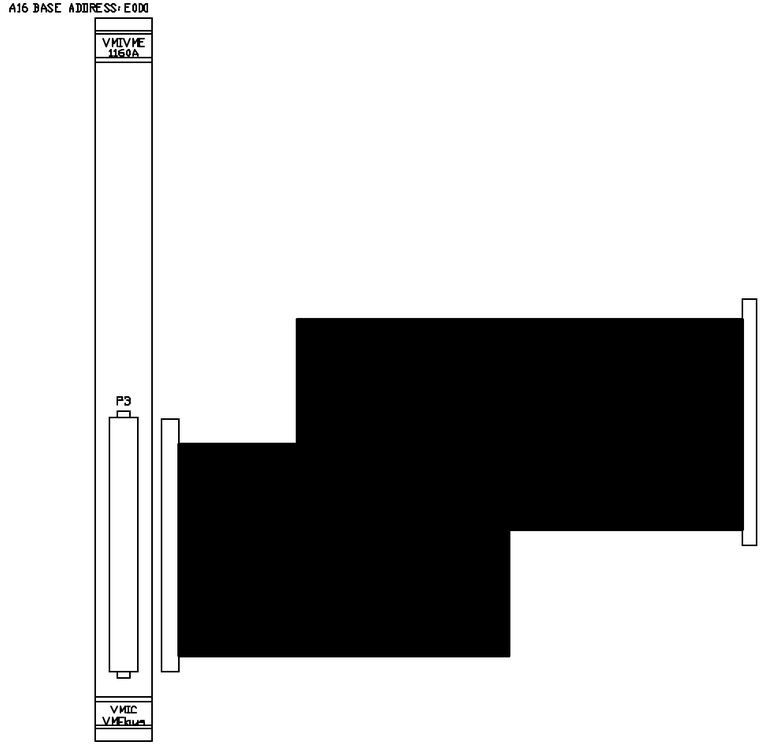

		TYPE OF SIGNAL	VAGO STRIP	NAME OF SIGNAL
A1		OUT STATUS HI	PIN 7 INST2-1	HARP 1 TTL.19MW250
C1		OUT STATUS LOW	PIN 8 INST2-1	
A2		IN STATUS HI	PIN 5 INST2-1	
C2		IN STATUS LOW	PIN 6 INST2-1	
A3		REM/LOC STATUS HI	PIN 15 INST2-1	
C3		REM/LOC STATUS LOW	PIN 16 INST2-1	
A4		OUT STATUS HI	PIN 11 INST2-1	CUP 1 TTL.19FC250
C4		OUT STATUS LOW	PIN 12 INST2-1	
A5		IN STATUS HI	PIN 9 INST2-1	
C5		IN STATUS LOW	PIN 10 INST2-1	
A6		REM/LOC STATUS HI	PIN 15 INST2-1	
C6		REM/LOC STATUS LOW	PIN 16 INST2-1	
A7		HI VOLT STATUS HI	PIN 13 INST2-1	
C7		HI VOLT STATUS LOW	PIN 14 INST2-1	
A8		OUT STATUS HI	PIN 7 INST2-2	HARP 2 TTL.20MW250
C8		OUT STATUS LOW	PIN 8 INST2-2	
A9		IN STATUS HI	PIN 5 INST2-2	
C9		IN STATUS LOW	PIN 6 INST2-2	
A10		REM/LOC STATUS HI	PIN 15 INST2-2	
C10		REM/LOC STATUS LOW	PIN 16 INST2-2	
A11		OUT STATUS HI	PIN 11 INST2-2	CUP 2 TTL.20FC250
C11		OUT STATUS LOW	PIN 12 INST2-2	
A12		IN STATUS HI	PIN 9 INST2-2	
C12		IN STATUS LOW	PIN 10 INST2-2	
A13		REM/LOC STATUS HI	PIN 15 INST2-2	
C13		REM/LOC STATUS LOW	PIN 16 INST2-2	
A14		HI VOLT STATUS HI	PIN 13 INST2-2	
C14		HI VOLT STATUS LOW	PIN 14 INST2-2	
A15		OUT STATUS HI	PIN 7 INST2-4	HARP 3 TTL.21MW152
C15		OUT STATUS LOW	PIN 8 INST2-4	
A16		IN STATUS HI	PIN 5 INST2-4	
C16		IN STATUS LOW	PIN 6 INST2-4	
A17		REM/LOC STATUS HI	PIN 15 INST2-4	
C17		REM/LOC STATUS LOW	PIN 16 INST2-4	
A18				
C18				
A19				
C19				
A20				
C20				
A21				
C21				
A22				
C22				
A23				
C23				
A24				
C24				
A25				
C25				
A26				
C26				
A27				
C27				
A28				
C28				
A29				
C29				
A30				
C30				
A31				
C31				
A32				
C32				

The following jumpers are installed:
J1, J3, J5, J7, J9, J11, J13, J15, J17, J19, J21, J23, J25,
J27, J29, J31, J33, J35, J37, J39, J41, J43, J45, J47,
J49, J51, J53, J55, J57, J59, J61, J63

U35
SW 1-3 OFF
SW 4-8 ON

U34
SW 1-8 ON

J65 AM2 For Short Supervisory I/O Access or Short
Nonprivileged I/O Access

INTERPRET IN GENERAL ACCORDANCE WITH ASME Y14.24M-1989	Q.A. CATEGORY A-3	DATE	BROOKHAVEN NATIONAL LABORATORY UPTON, N.Y. 11973
UNLESS OTHERWISE SPECIFIED DIMENSIONS ARE IN INCHES	DRAWN BY Schoenfeld	11/8/04	CONTROLS WIRING DIAGRAM
DECIMAL TOLERANCES .X ±.030 .XX ±.015 .XXX ±.005 ANGULAR TOLERANCE ± .5°	CHECKED BY		BLDG HITL2, CFE-HITL2-VME
	DESIGN APPROVAL		
	ENGINEER APPROVAL		VMIC 1160A-200D WIRING (A)
	SUPVR. APPROVAL		SIZE D — TALCOVE_HITL_65 — REV. A
OUTSTANDING ECN: NA	BREAK SHARP EDGES MAX. XX MIN. XX	NEXT ASSEMBLY	DRAWING NUMBER
			MATERIAL: — SCALE: FULL WEIGHT: - SHEET 65

*AUTOCAD

Schoenfeld, Controls 11/8/2004 3:55 PM talcove_hitl_66.dwg

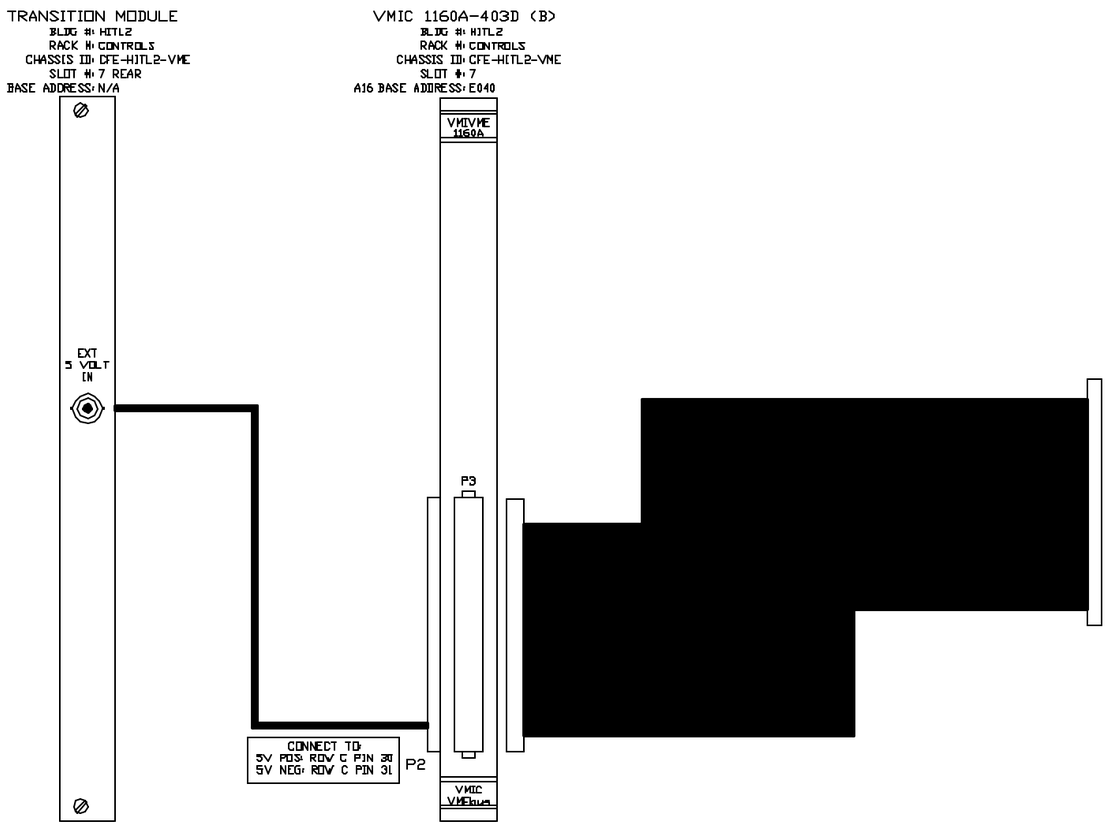

The following jumpers are installed:
J1, J3, J5, J7, J9, J11, J13, J15, J17, J19, J21, J23, J25,
J27, J29, J31, J33, J35, J37, J39, J41, J43, J45, J47,
J49, J51, J53, J55, J57, J59, J61, J63

U35
SW 1-3 OFF
SW 4-8 ON

U34
SW 1-2 ON
SW 3 OFF
SW 4-8 ON

J65 AM2 For Short Supervisory I/O Access or Short
Nonprivileged I/O Access

BT01 I/O PANEL

BLDG #: HITL2
RACK #: VACUUM
PANEL #: B

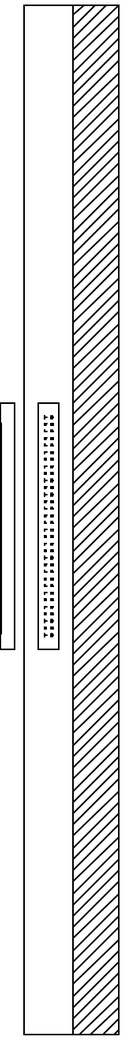

		TYPE OF SIGNAL	WAGO STRIP	NAME OF SIGNAL
A1		OPEN STATUS HI	PIN 25 VAC-2-1	VAC VALVE 1 19VP251
C1		OPEN STATUS LOW	PIN 33 VAC-2-1	
A2		CLOSED STATUS HI	PIN 34 VAC-2-1	
C2		CLOSED STATUS LOW	PIN 33 VAC-2-1	
A3		OPEN STATUS HI	PIN 11 VAC-2-2	VAC VALVE 2 20VP249
C3		OPEN STATUS LOW	PIN 3 VAC-2-2	
A4		CLOSED STATUS HI	PIN 4 VAC-2-2	
C4		CLOSED STATUS LOW	PIN 3 VAC-2-2	
A5		OPEN STATUS HI	PIN 25 VAC-2-2	VAC VALVE 3 20VP251
C5		OPEN STATUS LOW	PIN 33 VAC-2-2	
A6		CLOSED STATUS HI	PIN 34 VAC-2-2	
C6		CLOSED STATUS LOW	PIN 33 VAC-2-2	
A7				
C7				
A8				
C8				
A9				
C9				
A10				
C10				
A11				
C11				
A12				
C12				
A13				
C13				
A14				
C14				
A15				
C15				
A16				
C16				
A17				
C17				
A18				
C18				
A19				
C19				
A20				
C20				
A21				
C21				
A22				
C22				
A23				
C23				
A24				
C24				
A25				
C25				
A26				
C26				
A27				
C27				
A28				
C28				
A29				
C29				
A30				
C30				
A31				
C31				
A32				
C32				

-3	-2	-1	REF DESIGNATION	ECN NO.	DESCRIPTION	MFG. DWG NO./INS. NO.
QTY REQD						

INTERPRET IN GENERAL ACCORDANCE WITH ASME Y14.24M-1989
UNLESS OTHERWISE SPECIFIED DIMENSIONS ARE IN INCHES
DECIMAL TOLERANCES: .X ±.030, .XX ±.015, .XXX ±.005
ANGULAR TOLERANCE ±.5°
NA FINISH
BREAK SHARP EDGES
MAX. XX MIN. XX
OUTSTANDING ECN

Q.A. CATEGORY A-3

		DATE
DRAWN BY	Schoenfeld	11/8/04
CHECKED BY		
DESIGN APPROVAL		
ENGINEER APPROVAL		
SUPVR. APPROVAL		

NEXT ASSEMBLY

BROOKHAVEN NATIONAL LABORATORY
UPTON, N.Y. 11973
CONTROLS WIRING DIAGRAM
BLDG HITL2, CFE-HITL2-VME
VMIC 1160A-403D WIRING (B)

SIZE D | TALCOVE_HITL_66 | REV. A
DRAWING NUMBER

MATERIAL: ——— SCALE: FULL WEIGHT: - SHEET 66

1 *AUTOCAD

Schoenfeld, Controls 11/8/2004 3:56 PM talcove_hitl_67.dwg

BT01 I/O PANEL

BLDG #: HITL2
RACK #: CONTROLS
PANEL #: C

VMIC 2170A-210D
BLDG #: HITL2
RACK #: CONTROLS
CHASSIS ID: CFE-HITL2-VME
SLOT #: 8
A16 BASE ADDRESS: E100

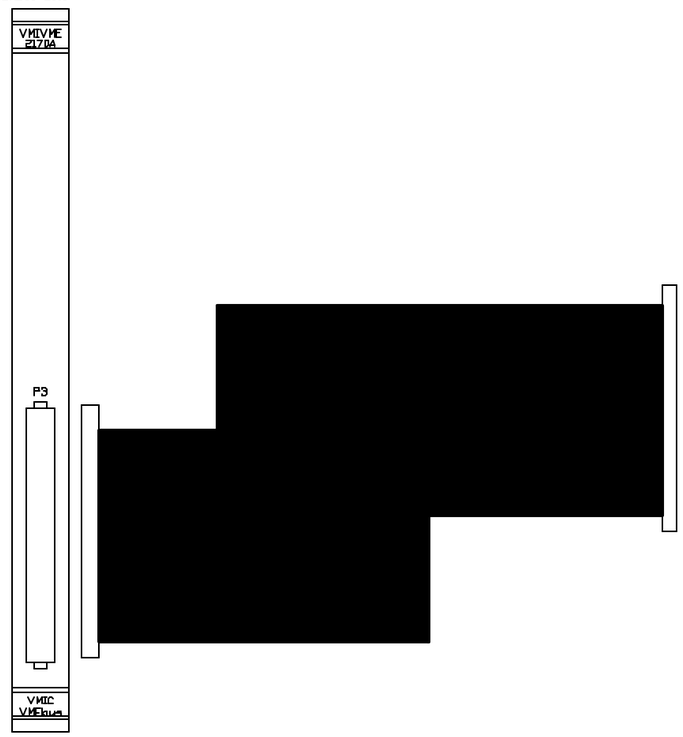

	TYPE OF SIGNAL	WAGO STRIP	NAME OF DEVICE
A1	HARP 1 CMD LOW	PIN 2 INST2-1 (5V POS)	TTL.19MW250
C1	HARP 1 CMD HI	PIN 1 INST2-1	
A2	FC 1 CMD LOW	PIN 4 INST2-1 (5V POS)	TTL.19FC250
C2	FC 1 CMD HI	PIN 3 INST2-1	
A3	HARP 2 CMD LOW	PIN 2 INST2-2 (5V POS)	TTL.20MW250
C3	HARP 2 CMD HI	PIN 1 INST2-2	
A4	FC 2 CMD LOW	PIN 4 INST2-2 (5V POS)	TTL.20FC250
C4	FC 2 CMD HI	PIN 3 INST2-2	
A5	HARP 3 CMD LOW	PIN 2 INST2-4 (5V POS)	TTL.21MW152
C5	HARP 3 CMD HI	PIN 1 INST2-4	
A6			
C6			
A7			
C7			
A8			
C8			
A9			
C9			
A10			
C10			
A11			
C11			
A12			
C12			
A13			
C13			
A14			
C14			
A15			
C15			
A16	HARP GAIN CMD LOW	PIN 2 8 PIN (5V POS)	
C16	HARP GAIN CMD HI	PIN 1 8 PIN	
A17	CUP/XFMR GAIN 1 CMD LOW	PIN 4 8 PIN (5V POS)	
C17	CUP/XFMR GAIN 1 CMD HI	PIN 3 8 PIN	
A18	MODE CMD LOW	5 VOLT NEG	TO SHEET 64
C18	MODE GAIN CMD HI	V294 INPUT 3	
A19	CUP/XFMR GAIN 2 CMD LOW	PIN 6 8 PIN (5V POS)	
C19	CUP/XFMR GAIN 2 CMD HI	PIN 5 8 PIN	
A20			
C20			
A21			
C21			
A22			
C22			
A23			
C23			
A24			
C24			
A25			
C25			
A26			
C26			
A27			
C27			
A28			
C28			
A29			
C29			
A30			
C30			
A31			
C31			
A32			
C32			

JUMPER SETTING:
ADDRESS: E100
A2-A7=IN
A8=OUT
A9-A12=IN
A13-A15=OUT
JA1=OUT

REV.	ZONE	ECN NO.	DATE	BY	CKD	APP.

-3	-2	-1	REF DESIGNATION	ECN NO.	DESCRIPTION	MFG. DEP NOLINK NO.
QTY REQD						

INTERPRET IN GENERAL ACCORDANCE WITH ASME Y14.24M-1989
UNLESS OTHERWISE SPECIFIED DIMENSIONS ARE IN INCHES
DECIMAL TOLERANCES .X ± .030 .XX ± .015 .XXX ± .005
ANGULAR TOLERANCE ± .5°
NA FINISH
BREAK SHARP EDGES MAX. XX MIN. XX
OUTSTANDING ECN

Q.A. CATEGORY A-3
DRAWN BY Schoenfeld DATE 11/18/04
CHECKED BY
DESIGN APPROVAL
ENGINEER APPROVAL
SUPVR. APPROVAL
NEXT ASSEMBLY

BROOKHAVEN NATIONAL LABORATORY
UPTON, N.Y. 11973
CONTROLS WIRING DIAGRAM
BLDG HITL2, CFE-HITL2-VME
VMIC 2170A-210D WIRING

SIZE D
DRAWING NUMBER TALCOVE_HITL_67
REV. A
MATERIAL: ——— SCALE: FULL WEIGHT: - SHEET 67

1 *AUTOCAD

Schoenfeld, Controls 11/8/2004 3:56 PM talcove_hitl_68.dwg

REV.	ZONE	ECN NO.	DATE	BY	CKR	APP.

BT01 I/O PANEL

BLDG #: HITL2
RACK #: CONTROLS
PANEL #: D

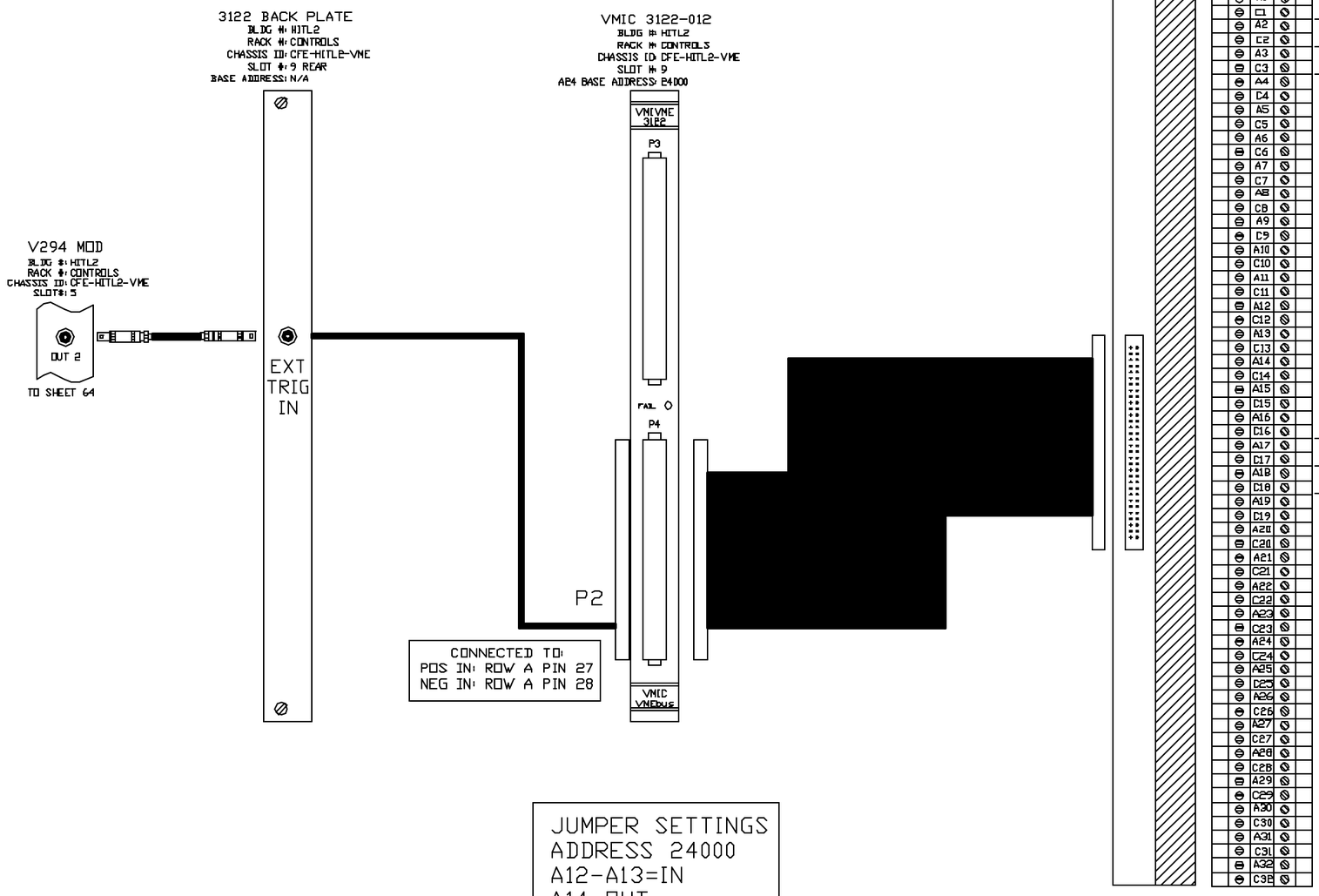

JUMPER SETTINGS
ADDRESS 24000
A12-A13=IN
A14=OUT
A15-A16=IN
A17=OUT
A18-A31=IN

		TYPE OF SIGNAL	36 PIN J6 CONN FROM INSTR CHASSIS	NAME OF SIGNAL
⊖	A1	HARP VOLTAGE HI	PIN 1 CABLE 1 BLK	TTL.19MW250
⊖	C1	HARP VOLTAGE LOW	PIN 32-34 CABLE 1 SHIELD	
⊖	A2	HARP VOLTAGE HI	PIN 2 CABLE 1 RED	TTL.20MW250
⊖	C2	HARP VOLTAGE LOW	PIN 32-34 CABLE 1 SHIELD	
⊖	A3	HARP VOLTAGE HI	PIN 4 CABLE 2 RED	TTL.21MW152
⊖	C3	HARP VOLTAGE LOW	PIN 32-34 CABLE 2 BLK	
⊖	A4			
⊖	C4			
⊖	A5			
⊖	C5			
⊖	A6			
⊖	C6			
⊖	A7			
⊖	C7			
⊖	A8			
⊖	C8			
⊖	A9			
⊖	C9			
⊖	A10			
⊖	C10			
⊖	A11			
⊖	C11			
⊖	A12			
⊖	C12			
⊖	A13			
⊖	C13			
⊖	A14			
⊖	C14			
⊖	A15			
⊖	C15			
⊖	A16			
⊖	C16			
⊖	A17	CUP VOLTAGE HI	PIN 9 CABLE 0 BLK	TTL.19FC250
⊖	C17	CUP VOLTAGE LOW	PIN 32-34 CABLE 0 SHIELD	
⊖	A18	CUP VOLTAGE HI	PIN 10 CABLE 0 RED	TTL.20FC250
⊖	C18	CUP VOLTAGE LOW	PIN 32-34 CABLE 0 SHIELD	
⊖	A19			
⊖	C19			
⊖	A20			
⊖	C20			
⊖	A21			
⊖	C21			
⊖	A22			
⊖	C22			
⊖	A23			
⊖	C23			
⊖	A24			
⊖	C24			
⊖	A25			
⊖	C25			
⊖	A26			
⊖	C26			
⊖	A27			
⊖	C27			
⊖	A28			
⊖	C28			
⊖	A29			
⊖	C29			
⊖	A30			
⊖	C30			
⊖	A31			
⊖	C31			
⊖	A32			
⊖	C32			

-3	-2	-1	REF DESIGNATION	FSCM NO.	DESCRIPTION	MANF. DWG HOLDING NO.
ANY ASSEM						

INTERPRET IN GENERAL ACCORDANCE WITH ASME Y14.24M-1989
UNLESS OTHERWISE SPECIFIED DIMENSIONS ARE IN INCHES
DECIMAL TOLERANCES .X ±.030 .XX ±.015 .XXX ±.005
ANGULAR TOLERANCE ± .5°
NA FINISH
BREAK SHARP EDGES MAX. XX MIN. XX
OUTSTANDING ECN

Q.A. CATEGORY A-3

		DATE
DRAWN BY	Schoenfeld	11/13/04
CHECKED BY		
DESIGN APPROVAL		
ENGINEER APPROVAL		
SURVEY APPROVAL		

NEXT ASSEMBLY

BROOKHAVEN NATIONAL LABORATORY
UPTON, N.Y. 11973
CONTROLS WIRING DIAGRAM
BLDG HITL2, CFE-HITL2-VME
3122 BREAKOUT WIRING

SIZE D | TALCOVE_HITL_68 (DRAWING NUMBER) | REV. A

MATERIAL: ——— SCALE: FULL WEIGHT: - SHEET 68

*AUTOCAD

Schoenfeld, Controls 11/8/2004 3:56 PM talcove_hitl_69.dwg

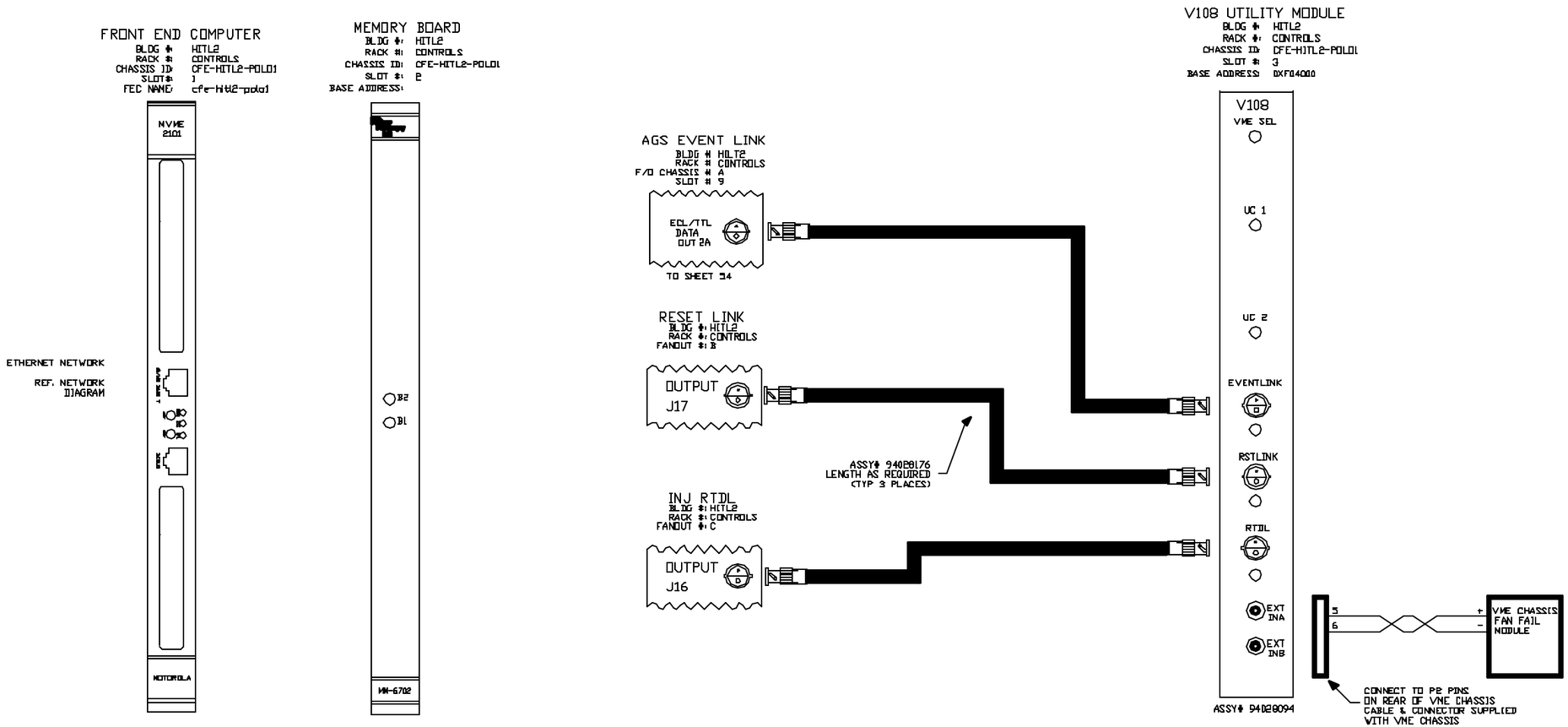

JUMPER LIST

E25 through E30 are configured for remote reset address at the time of board acceptance test.
DO NOT MODIFY!

Remote reset pulls VME SYS Reset.
E58-E60, E59-E61

A24 BASE ADDRESS= 4000h
E1-E13, E2-E14, E3-E15, E4-E16, E5-E17, E6-E18
E7-E19, E8-E20, E9-E21, E10-E22, E11-E24, E57-E63
SW1=OPEN
SW2=CLOSED
SW3=OPEN
SW4=OPEN

REV.	ZONE	ECN NO.	DATE	BY	CKR	APP.

-3	-2	-1	REF DESIGNATION	ITEM NO.	DESCRIPTION	MATL DWG NO.&NO.
QTY REQD						

INTERPRET IN GENERAL ACCORDANCE WITH ASME Y14.24M-1989
UNLESS OTHERWISE SPECIFIED DIMENSIONS ARE IN INCHES
DECIMAL TOLERANCES .X ±.030 .XX ±.015 .XXX ±.005
ANGULAR TOLERANCE ± .5°
NA FINISH
BREAK SHARP EDGES MAX. XX MIN. XX
OUTSTANDING ECN

Q.A. CATEGORY A-3

		DATE
DRAWN BY	Schoenfeld	11/8/04
CHECKED BY		
DESIGN APPROVAL		
ENGINEER APPROVAL		
SUPVR. APPROVAL		

NEXT ASSEMBLY

BROOKHAVEN NATIONAL LABORATORY
UPTON, N.Y. 11973
CONTROLS WIRING DIAGRAM
BLDG HITL2, CHASSIS CFE-HITL2-POL01
FT END COMP /V108 UTIL MODULE

SIZE D — DRAWING NUMBER TALCOVE_HITL_69 — REV. A

MATERIAL: ——— SCALE: FULL WEIGHT: - SHEET 68

1 *AUTOCAD

Schoenfeld, Controls 11/8/2004 3:57 PM talcove_hitl_70.dwg

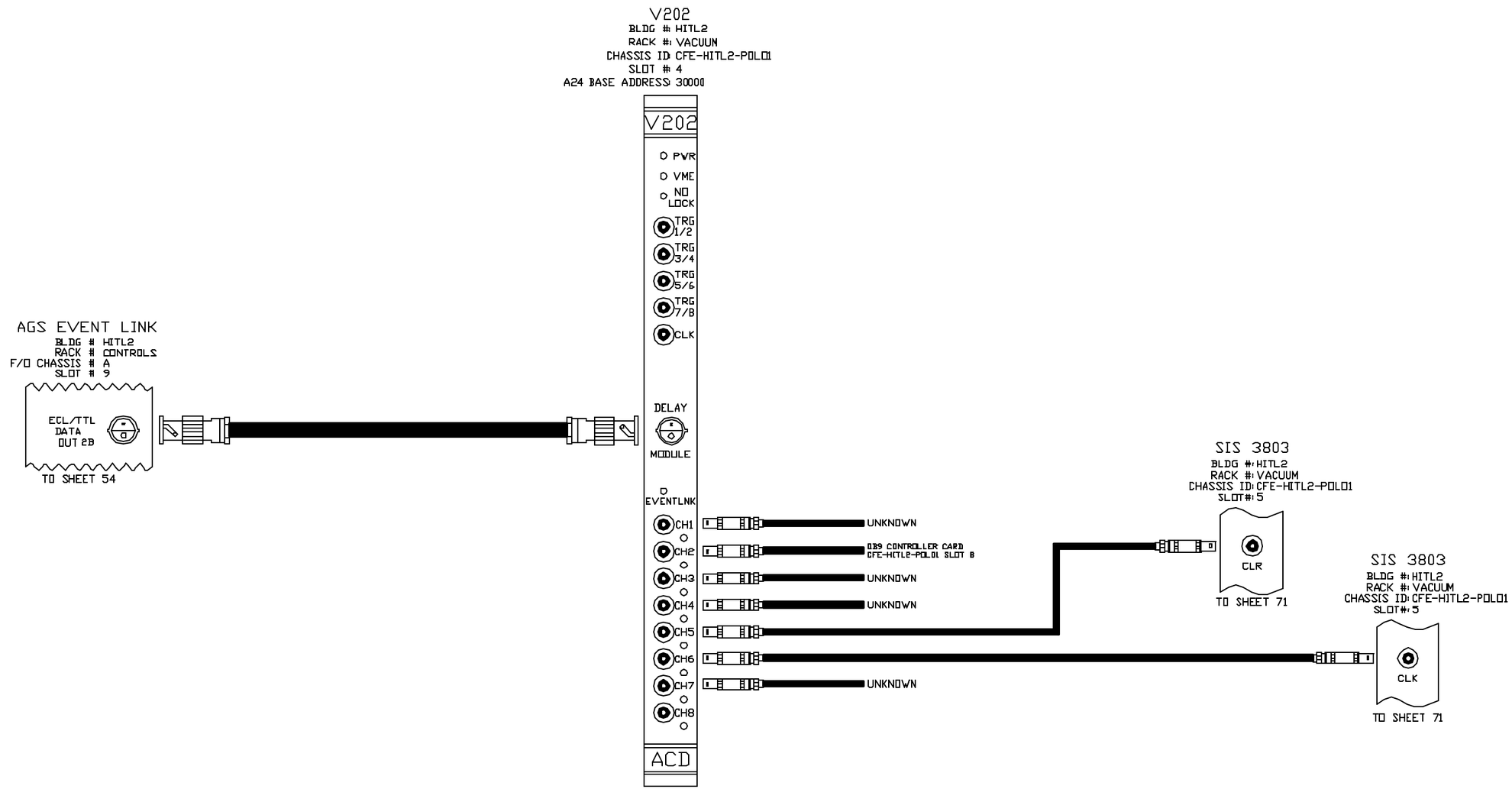

V202 JUMPER SETTINGS
A24 BASE ADDRESS
0X030000

SW1	JP1=IN
A16=1	JP2=PIN 1 TO 2
A17=1	JP3=IN
A18=0	JP4=OUT
A19=0	JP5=OUT
A20=0	JP6=OUT
A21=0	JP7=OUT
A22=0	JP8=OUT
A23=0	JP9=OUT
	JP10=IN
	JP11,12,13=IN

-3 -2 -1 ANY ASSEM	REF DESIGNATOR	FSCM NO.	DESCRIPTION		MAT'L DWG NO.&NO.
	INTERPRET IN GENERAL ACCORDANCE WITH ASME Y14.24M-1989	Q.A. CATEGORY A-3	DATE	BROOKHAVEN NATIONAL LABORATORY	
		DRAWN BY Schoenfeld	10/13/04	UPTON, N.Y. 11973	
	UNLESS OTHERWISE SPECIFIED DIMENSIONS ARE IN INCHES	CHECKED BY		CONTROLS WIRING DIAGRAM	
	DECIMAL TOLERANCES .X ±.030 .XX ±.015 .XXX ±.005 ANGULAR TOLERANCE ± .5°	DESIGN APPROVAL		BLDG HITL2, CFE-HITL2-POL01	
		ENGINEER APPROVAL		V202 WIRING DIAGRAM	
		SUPVR. APPROVAL		SIZE D	DRAWING NUMBER TALCOVE_HITL_70 REV. A
OUTSTANDING ECN	NA FINISH	BREAK SHARP EDGES MAX. XX MIN. XX	NEXT ASSEMBLY	MATERIAL: —	SCALE: FULL WEIGHT: - SHEET 70

1 *AUTOCAD

Schoenfeld, Controls 11/8/2004 3:57 PM talcove_hitl_71.dwg

SIS3803 SCALER
BLDG #: HITL2
RACK #: VACUUN
CHASSIS ID: CFE-HITL2-POLO1
SLOT #: 5
A32 BASE ADDRESS: 0X63B3B00

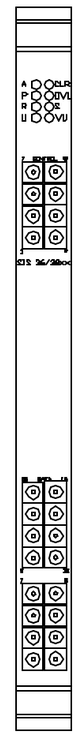

BOARD ADDRESS JUMPERS

EN_A16: OUT
EN_A24: OUT
EN_132: IN

SW_A32UI: 0
SW_A32L: 8
SW_A24U: 3
SW_A24L: 8
SW_A16U: 3 (IF MORE BD'S INSTALLED SW_A16U WILL BE 4,5,6 ETC)

J_115: OUT
J_ALL: IN

REV.	ZONE	ECN NO.	DATE	BY	CKR	APP.

-3	-2	-1	REF DESIGNATOR	ECN NO.	DESCRIPTION	MAT'L DWG NO./ENG. NO.
QTY REQD						

INTERPRET IN GENERAL ACCORDANCE WITH ASME Y14.24M-1989
UNLESS OTHERWISE SPECIFIED DIMENSIONS ARE IN INCHES
DECIMAL TOLERANCES .X ±.030 .XX ±.015 .XXX ±.005
ANGULAR TOLERANCE ± .5°
NA FINISH
BREAK SHARP EDGES
MAX. XX MIN. XX
OUTSTANDING ECN

Q.A. CATEGORY A-3
DRAWN BY Schoenfeld 10/25/04
CHECKED BY
DESIGN APPROVAL
ENGINEER APPROVAL
SUPVR. APPROVAL
NEXT ASSEMBLY

BROOKHAVEN NATIONAL LABORATORY
UPTON, N.Y. 11973
CONTROLS WIRING DIAGRAM
BLDG HITL2, CFE-HITL2-POLO1
SIS 3803 SCALER BOARD
SIZE D
TALCOVE_HITL_71
DRAWING NUMBER
REV. A
MATERIAL: ——— SCALE: FULL WEIGHT: - SHEET 71

*AUTOCAD

REV.	ZONE	ECN NO.	DATE	BY	CKR	APP.

Schoenfeld, Controls 11/8/2004 3:58 PM talcove_hitl_72.dwg

OMS MOTOR CONTROL MODULE VX2-020

BLDG #: HITL2
RACK #: VACUUM
CHASSIS ID: CFE-HITL2-POL01
SLOT #: 7
A16 BASE ADDRESS: 0XFC40

MOTOR CONTROL MODULE

BLDG #: HITL2
RACK #: VACUUM
CHASSIS ID: CFE-HITL2-POL01
SLOT #: 8
BASE ADDRESS: NA

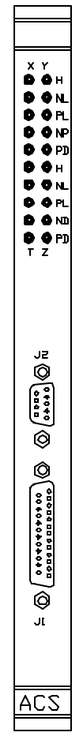

P2 INTERFACE
RIBBON CABLE

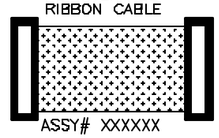

ASSY# XXXXXX

JP1 OUT
JP2 IN
JP3 OUT
JP4 IN
JP5 OUT
JP6 IN
JP7 OUT
JP8 IN
JP9 OUT
JP10 IN
JP11 OUT
JP12 IN
JP13 OUT
JP14 IN
JP15 OUT
JP16 IN
JP17 OUT
JP18 IN
JP19 OUT
JP20 IN
JP21 OUT
JP22 IN
JP23 OUT
JP24 IN

VX-2 JUMPER LIST
S1=ALL ON
S2=1 TO 6 ON, 7 & 8 OFF
S3=1 TO 5 OFF, 6 ON, 7 & 8 OFF
S5=1 OFF, 2 ON, 3 TO 8 OFF
S6=1 OFF, 2 ON, 3 OFF, 4 & 5 ON, 6 TO 8 OFF
S7=1 ON, 2 OFF, 3 TO 8 ON
S8=1 TO 6 OFF, 7 & 8 ON
S9=1 TO 8 OFF

BUS GRANT & IACK
JUMPERS MUST BE
INSTALLED

-3	-2	-1	REF DESIGNATOR	ITEM NO.	DESCRIPTION	MAT'L. DWG NO.(IN. NO.
QTY REQD						

INTERPRET IN GENERAL ACCORDANCE WITH ASME Y14.24M-1989
UNLESS OTHERWISE SPECIFIED DIMENSIONS ARE IN INCHES
DECIMAL TOLERANCES
.X ±.030
.XX ±.015
.XXX ±.005
ANGULAR TOLERANCE ± .5°

OUTSTANDING ECN: NA
FINISH
BREAK SHARP EDGES
MAX. XX MIN. XX

Q.A. CATEGORY A-3

		DATE
DRAWN BY	Schoenfeld	11/25/04
CHECKED BY		
DESIGN APPROVAL		
ENGINEER APPROVAL		
SUPVR. APPROVAL		

NEXT ASSEMBLY

BROOKHAVEN NATIONAL LABORATORY
UPTON, N.Y. 11973
CONTROLS WIRING DIAGRAM
BLDG. HITL2 CHASSIS CFE-HITL2-POL01
OMS MOTOR CONTROLLER

SIZE: D
TALCOVE_HITL_72
DRAWING NUMBER
REV. A

MATERIAL: SCALE: NA WEIGHT: SHEET 72

*AUTOCAD

Schoenfeld, Controls 11/8/2004 3:58 PM talcove_hitl_73.dwg

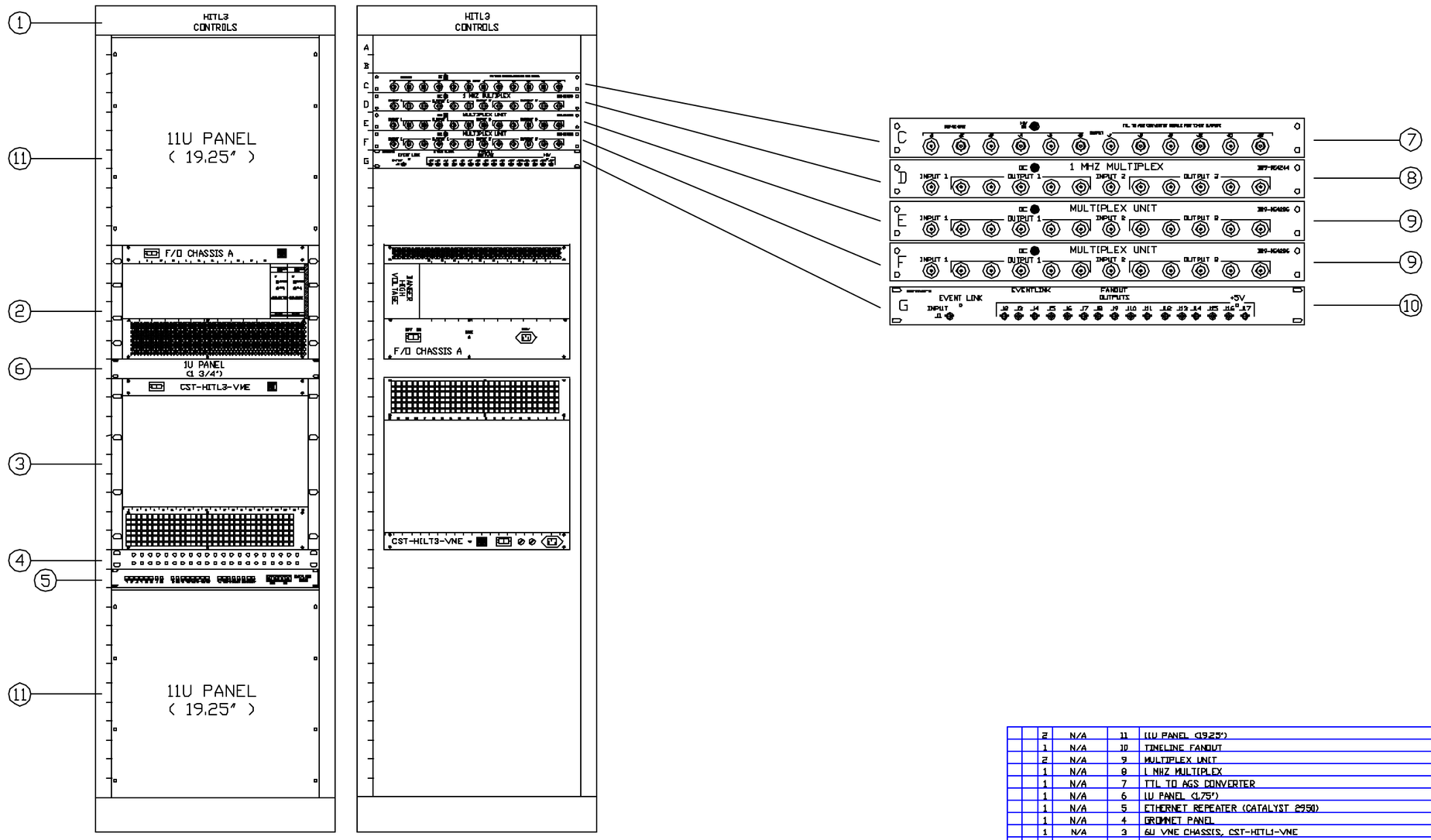

		2	N/A	11	11U PANEL (19.25")	
		1	N/A	10	TIMELINE FANOUT	D019-E2442
		2	N/A	9	MULTIPLEX UNIT	D019-0E4286
		1	N/A	8	1 MHZ MULTIPLEX	D019-0E4244
		1	N/A	7	TTL TO AGS CONVERTER	N/A
		1	N/A	6	1U PANEL (1.75")	
		1	N/A	5	ETHERNET REPEATER (CATALYST 2950)	N/A
		1	N/A	4	GROMMET PANEL	N/A
		1	N/A	3	6U VME CHASSIS, CST-HITL1-VME	N/A
		1	N/A	2	F/O CHASSIS	N/A
		1	HITL 3	1	19" RACK	N/A
-3	-2	-1	REF DESIGNATION	ITEM NO.	DESCRIPTION	MFG. OR NO. NO.
QTY REQD						

INTERPRET IN GENERAL ACCORDANCE WITH ASME Y14.24M-1989

UNLESS OTHERWISE SPECIFIED DIMENSIONS ARE IN INCHES

DECIMAL TOLERANCES
.X ±.030
.XX ±.015
.XXX ±.005
ANGULAR TOLERANCE ±.5°

NA
FINISH

BREAK SHARP EDGES
MAX. XX MIN. XX

OUTSTANDING ECN

Q.A. CATEGORY A-3

		DATE
DRAWN BY	Schoenfeld	11/23/04
CHECKED BY		
DESIGN APPROVAL		
ENGINEER APPROVAL		
SUPPVR. APPROVAL		

NEXT ASSEMBLY

BROOKHAVEN NATIONAL LABORATORY
UPTON, N.Y. 11973

RACK LAYOUT FOR HITL3
CONTROL SYSTEM
HITL3 CONTROLS RACK

SIZE D
TALCOVE_HITL_73
DRAWING NUMBER
REV. A

MATERIAL: ——— SCALE: FULL WEIGHT: - SHEET 73

*AUTOCAD

Schoenfeld, Controls 11/8/2004 3:58 PM talcove_hitl_74.dwg

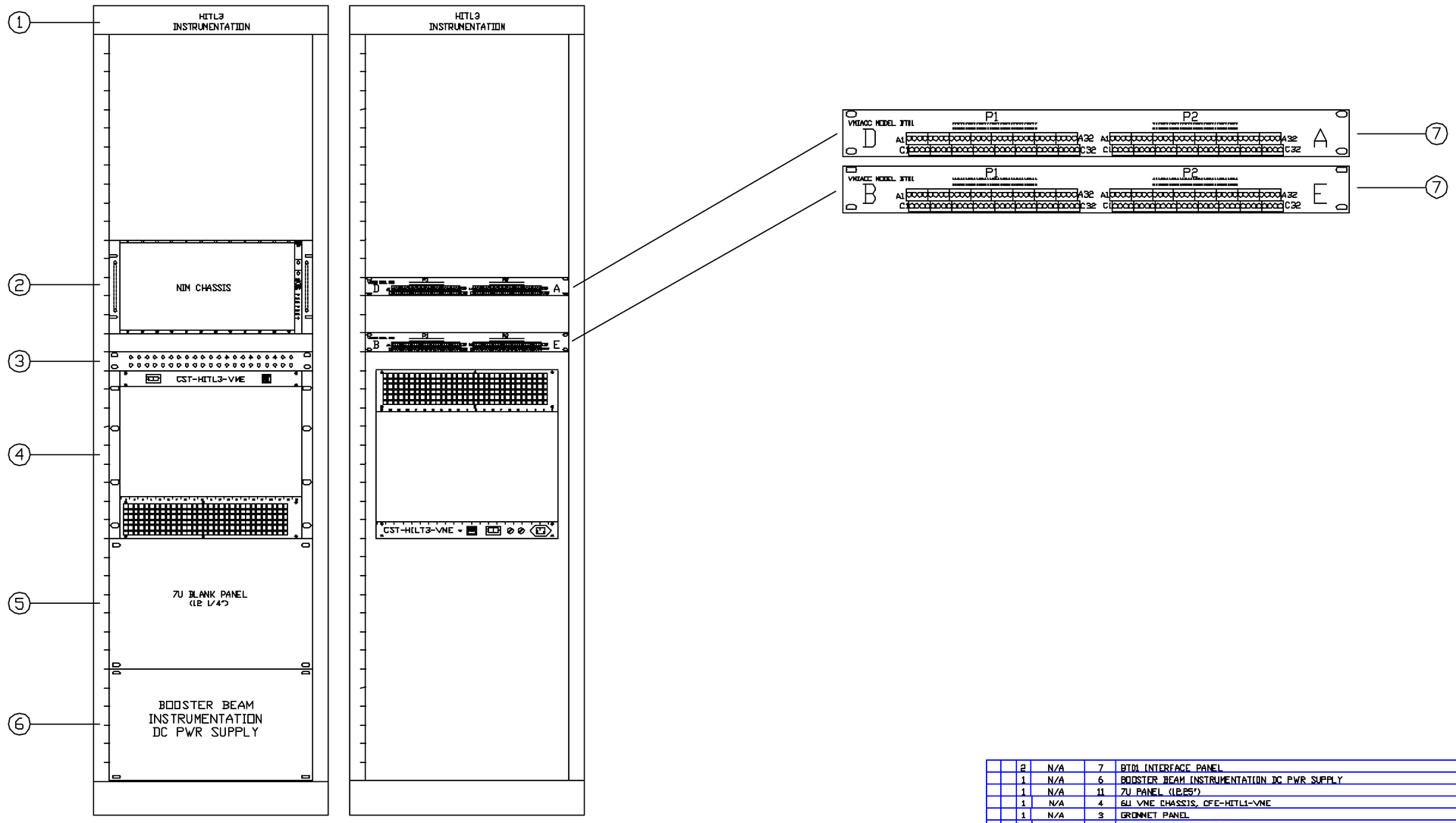

	2	N/A	7	BTD1 INTERFACE PANEL	N/A
	1	N/A	6	BOOSTER BEAM INSTRUMENTATION DC PWR SUPPLY	
	1	N/A	11	7U PANEL (1.25")	
	1	N/A	4	6U VME CHASSIS, CFE-HITL1-VME	N/A
	1	N/A	3	GROMMET PANEL	N/A
	1	N/A	2	NIM CHASSIS INTRUMENTATION	N/A
	1	HITL 3	1	19" RACK	N/A
-3 -2 -1 QTY REQD	REF DESIGNATOR	ITEM NO.	DESCRIPTION		MFG. DWG ASSUME NO.

INTERPRET IN GENERAL ACCORDANCE WITH ASME Y14.24M-1989

UNLESS OTHERWISE SPECIFIED DIMENSIONS ARE IN INCHES

DECIMAL TOLERANCES
.X ±.030
.XX ±.015
.XXX ±.005
ANGULAR TOLERANCE ± .5°

NA FINISH

BREAK SHARP EDGES
MAX. XX MIN. XX

OUTSTANDING ECN

Q.A. CATEGORY A-3

		DATE
DRAWN BY	Schoenfeld	11/8/04
CHECKED BY		
DESIGN APPROVAL		
ENGINEER APPROVAL		
SUPVR. APPROVAL		

NEXT ASSEMBLY

BROOKHAVEN NATIONAL LABORATORY
UPTON, N.Y. 11973

RACK LAYOUT FOR HITL3
CONTROL SYSTEM
HITL3 CONTROLS RACK

SIZE D — TALCOVE_HITL_74 — REV. A
DRAWING NUMBER

MATERIAL: ——— SCALE: FULL WEIGHT: - SHEET 74

*AUTOCAD

Schoenfeld, Controls 11/8/2004 3:59 PM talcove_hitl_75.dwg

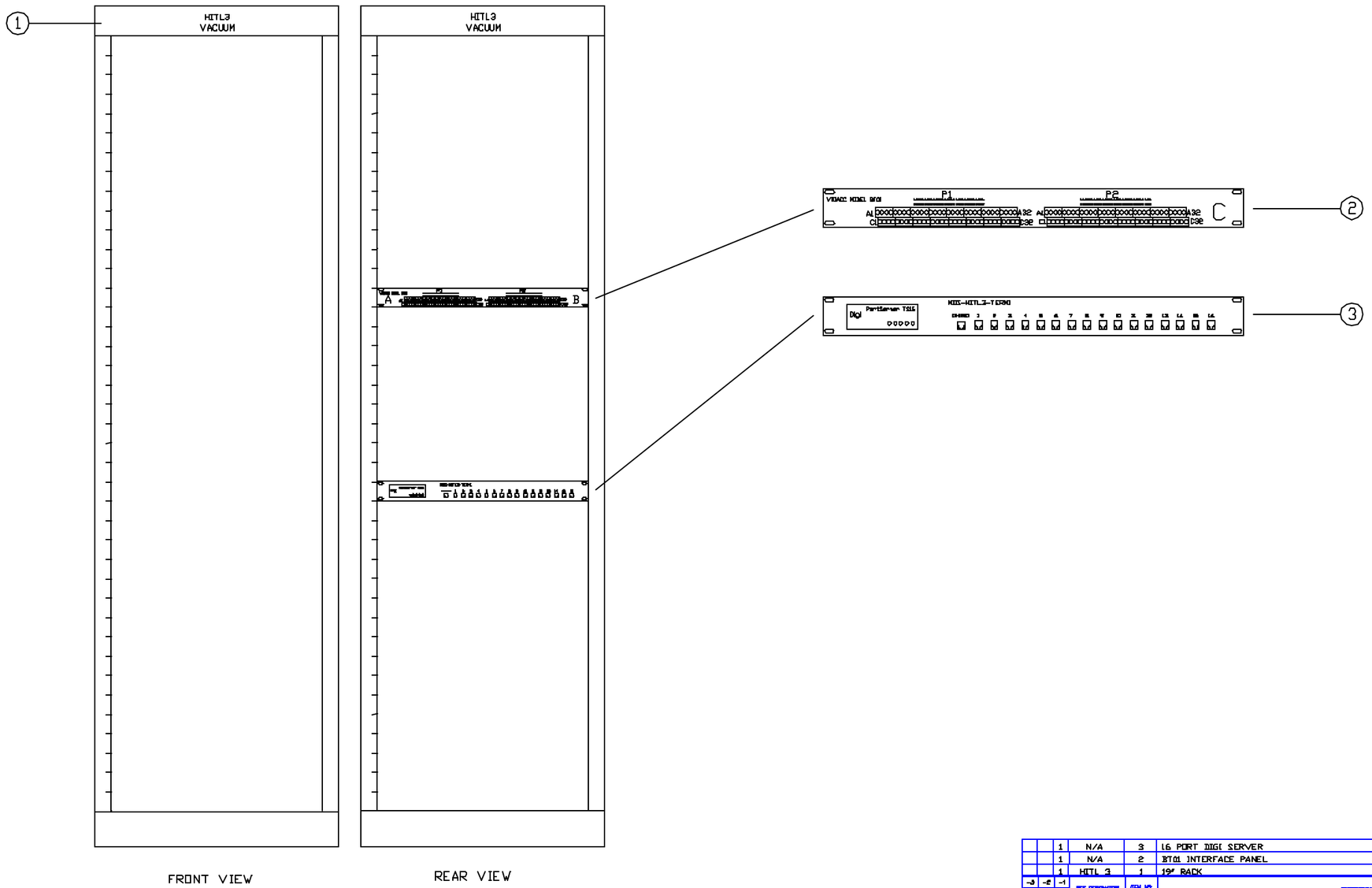

QTY REQD	REF DESIGNATION	ITEM NO.	DESCRIPTION	MAT'L DWG NO./ENG. NO.
1	N/A	3	16 PORT DIGI SERVER	N/A
1	N/A	2	BT01 INTERFACE PANEL	N/A
1	HITL 3	1	19" RACK	N/A

INTERPRET IN GENERAL ACCORDANCE WITH ASME Y14.24M-1989	Q.A. CATEGORY A-3
UNLESS OTHERWISE SPECIFIED DIMENSIONS ARE IN INCHES	DRAWN BY Schoenfeld 11/8/04
DECIMAL TOLERANCES .X ±.030 .XX ±.015 .XXX ±.005 ANGULAR TOLERANCE ± .5°	CHECKED BY
	DESIGN APPROVAL
	ENGINEER APPROVAL
	SURVEY APPROVAL
NA FINISH	BREAK SHARP EDGES MAX. XX MIN. XX
OUTSTANDING ECN	NEXT ASSEMBLY

BROOKHAVEN NATIONAL LABORATORY
UPTON, N.Y. 11973
RACK LAYOUT FOR HITL3
CONTROL SYSTEM
HITL3 CONTROLS RACK

SIZE D | DRAWING NUMBER TALCOVE_HITL_75 | REV. A

MATERIAL: ——— SCALE: FULL WEIGHT: - SHEET 75

*AUTOCAD

REV.	ZONE	ECN NO.	DATE	BY	CKR	APP.

Schoenfeld, Controls 11/8/2004 3:59 PM talcove_hitl_76.dwg

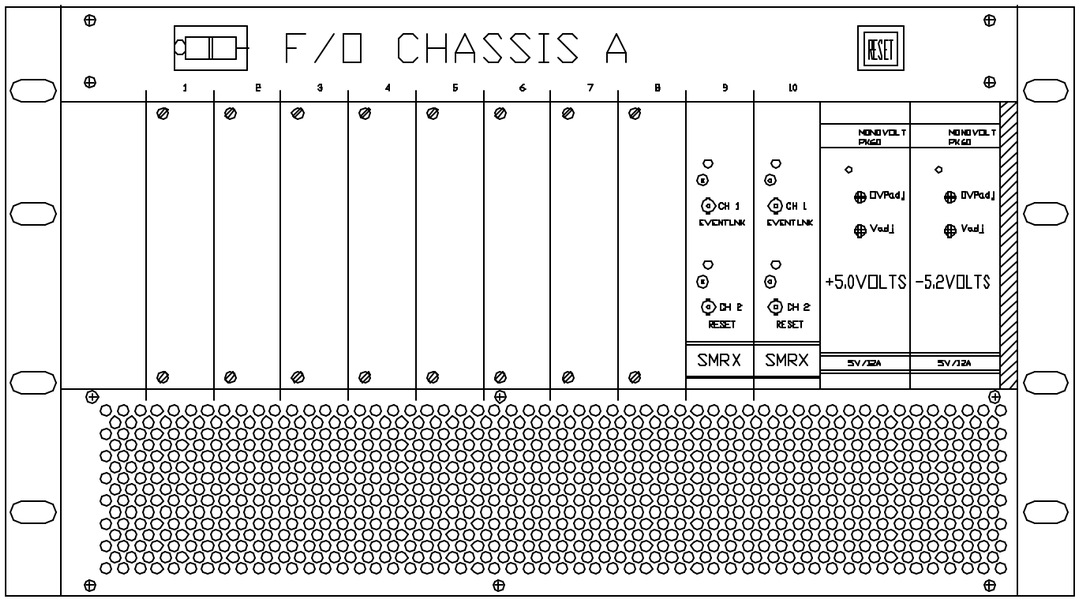

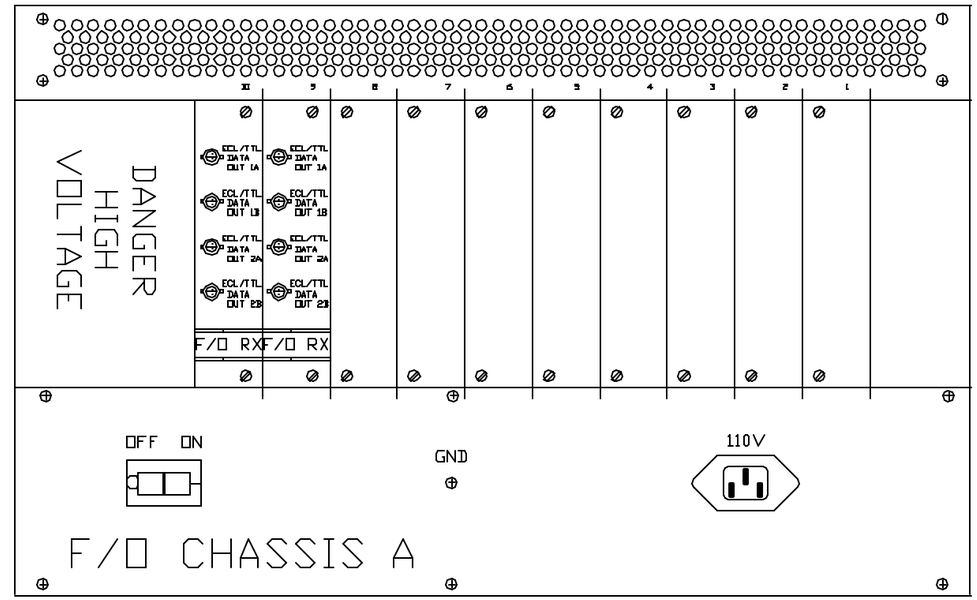

NOTE 1: FILLER PANELS FOR UNUSED SLOTS

-3	-2	-1	REF DESIGNATOR	ITEM NO.	DESCRIPTION	MAT'L DWG NO./NAME NO.
		LB	NOTE 1	6	3U X 6HP BLANK PANEL	ESFE-3032
		1	SLOT 12	5	NONOVOLT P.S. -5.2V	X
		1	SLOT 11	4	NONOVOLT P.S. +5V	X
		2	SLOT 9, 10	3	3U FIBER OPTIC TRANSITION MODULE (TTL)	DD9-E2542
		2	SLOT 9, 10	2	3U FIBER OPTIC SINGLE MODE RECEIVER	94028101
		1	N/A	1	3U FIBER OPTIC CHASSIS	94028261

QTY REQD

INTERPRET IN GENERAL ACCORDANCE WITH ASME Y14.24M-1989

UNLESS OTHERWISE SPECIFIED DIMENSIONS ARE IN INCHES

DECIMAL TOLERANCES
.X ±.030
.XX ±.015
.XXX ±.005
ANGULAR TOLERANCE ± .5°

NA FINISH

BREAK SHARP EDGES MAX. XX MIN. XX

OUTSTANDING ECN

Q.A. CATEGORY A-3

		DATE
DRAWN BY	Schoenfeld	11/23/04
CHECKED BY		
DESIGN APPROVAL		
ENGINEER APPROVAL		
SUPVR. APPROVAL		

NEXT ASSEMBLY

BROOKHAVEN NATIONAL LABORATORY
ASSOCIATED UNIVERSITIES, INC.
UPTON, N.Y. 11973

CONTROLS WIRING DIAGRAM

BLDG HITL3

FIBER FANOUT CHASSIS

SIZE D — TALCOVE_HITL_76 — REV. A

DRAWING NUMBER

MATERIAL: ——— SCALE: FULL WEIGHT: - SHEET 76

*AUTOCAD

Schoenfeld, Controls 11/8/2004 4:00 PM talcove_hitl_77.dwg

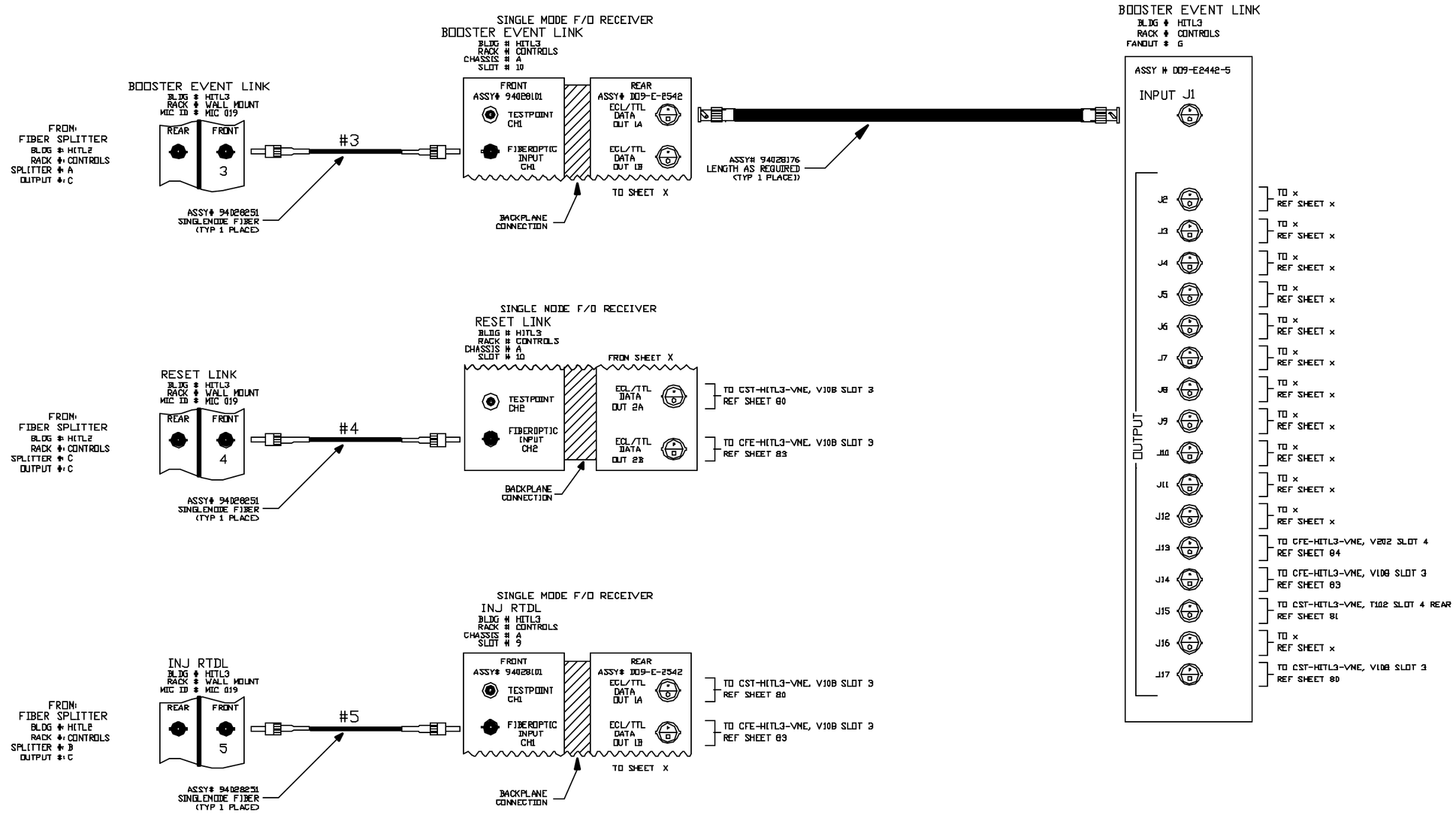

REV.	ZONE	ECN NO.	DATE	BY	CKR	APP.

-3 -2 -1 ANY ASSEM	REF DESIGNATION	ITEM NO.	DESCRIPTION	MANF. DWG HOUSING NO.

INTERPRET IN GENERAL ACCORDANCE WITH ASME Y14.24M-1989

UNLESS OTHERWISE SPECIFIED DIMENSIONS ARE IN INCHES

DECIMAL TOLERANCES
.X ±.030
.XX ±.015
.XXX ±.005
ANGULAR TOLERANCE ± .5°

NA FINISH

BREAK SHARP EDGES MAX. XX MIN. XX

OUTSTANDING ECN

Q.A. CATEGORY A-3

		DATE
DRAWN BY	Schoenfeld	10/25/04
CHECKED BY		
DESIGN APPROVAL		
ENGINEER APPROVAL	R. MICHNOFF	5/13/97
SUPVR. APPROVAL		

NEXT ASSEMBLY

BROOKHAVEN NATIONAL LABORATORY
ASSOCIATED UNIVERSITIES, INC.
UPTON, N.Y. 11973

CONTROLS WIRING DIAGRAM

BLDG HITL3

BOOSTER EVENT LINK

SIZE D

TALCOVE_HITL_77

DRAWING NUMBER

REV. A

MATERIAL: ——— SCALE: NA WEIGHT: - SHEET 77

1 *AUTOCAD

Schoenfeld, Controls 11/8/2004 4:00 PM talcove_hitl_78.dwg

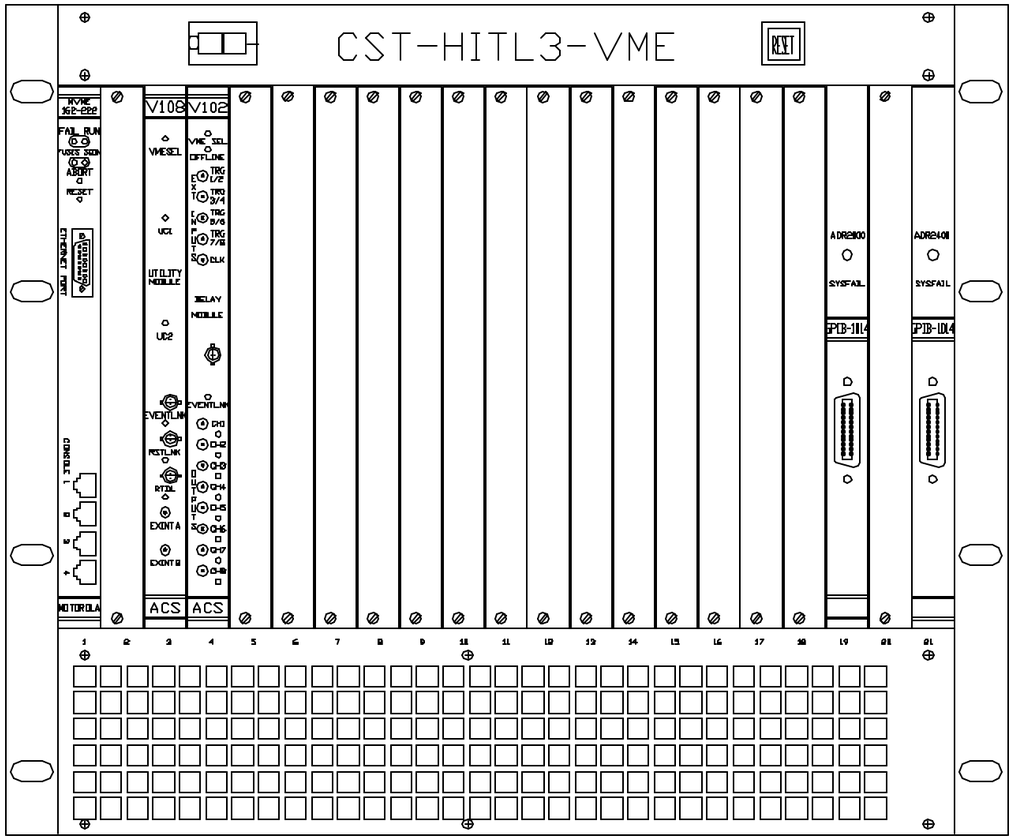

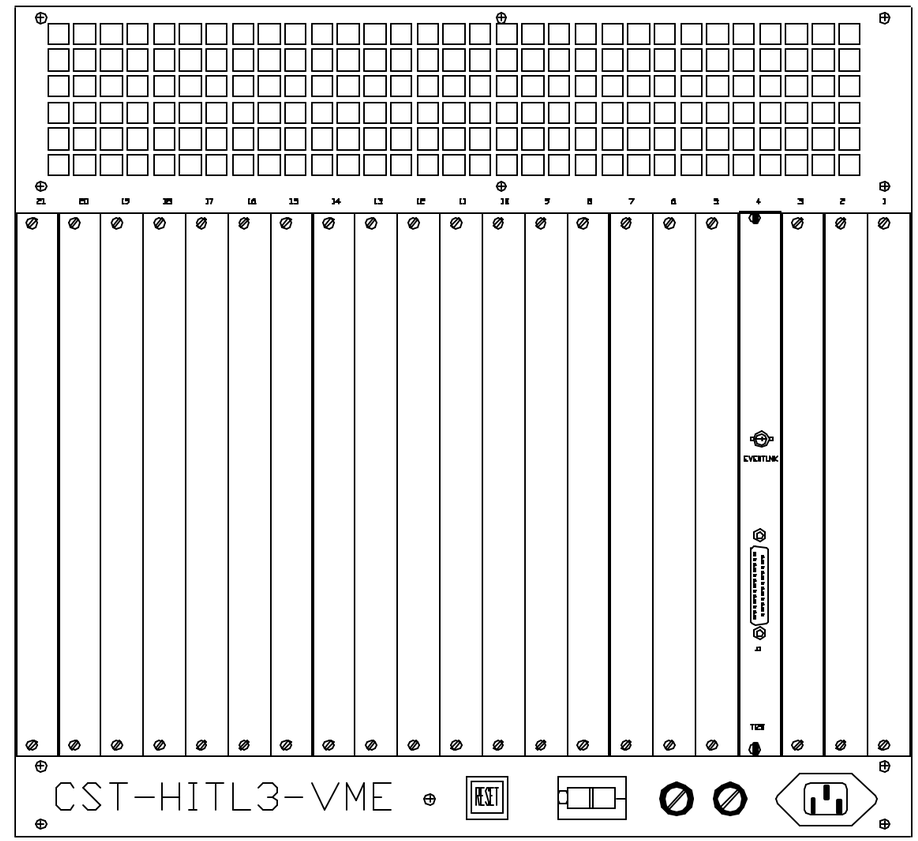

NOTE 1: FOR UNUSED SLOTS

QTY REQD	REF DESIGNATOR	ITEM NO.	DESCRIPTION	MAT'L DWG NO.OR NO.
X	X	X	X	X
35	NOTE 1	8	6U FILLER PANELS	X
2	SLOTS 4,5	7	T120 TRANSITION MODULE	X
2	SLOTS 20,21	6	GPIB 1014	X
X	X	X	X	X
1	SLOT 4	4	V102 DECODER MODULE	94028070
1	SLOT 3	3	V108 UTILITY MODULE	94028094
1	SLOT 1	2	FRONT END COMPUTER (162-222)	X
1	N/A	1	6U VME CHASSIS	RHIC-93008100

INTERPRET IN GENERAL ACCORDANCE WITH ASME Y14.24M-1989

UNLESS OTHERWISE SPECIFIED DIMENSIONS ARE IN INCHES

DECIMAL TOLERANCES
.X ± .030
.XX ± .015
.XXX ± .005
ANGULAR TOLERANCE ± .5°

OUTSTANDING ECN

NA FINISH

BREAK SHARP EDGES MAX. XX MIN. XX

NEXT ASSEMBLY

Q.A. CATEGORY A-3

		DATE
DRAWN BY	Schoenfeld	11/15/04
CHECKED BY		
DESIGN APPROVAL		
ENGINEER APPROVAL		
SUPVR. APPROVAL		

BROOKHAVEN NATIONAL LABORATORY
ASSOCIATED UNIVERSITIES, INC.
UPTON, N.Y. 11973

CONTROLS WIRING DIAGRAM

BLDG HITL3

CST-HILT3-VME

SIZE D

TALCOVE_HITL_78

DRAWING NUMBER

REV.

MATERIAL: WEIGHT: SCALE: SHEET 78

*AUTOCAD

Schoenfeld, Controls 11/8/2004 4:00 PM talcove_hitl_79.dwg

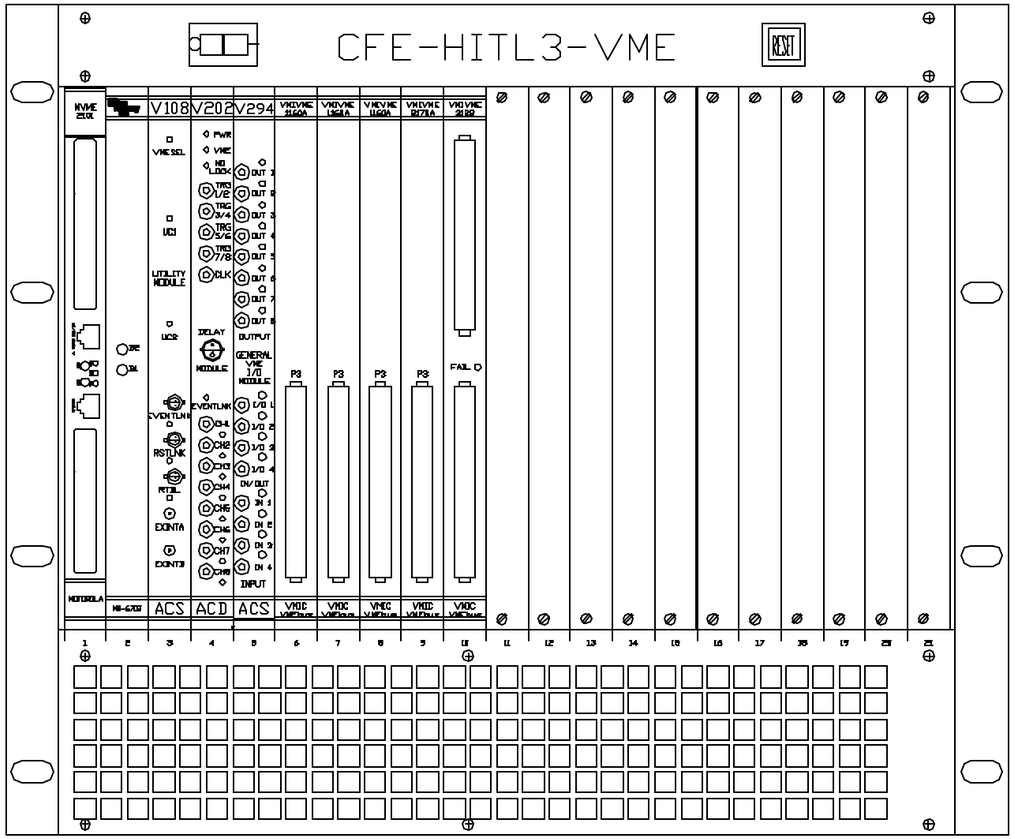

FRONT VIEW

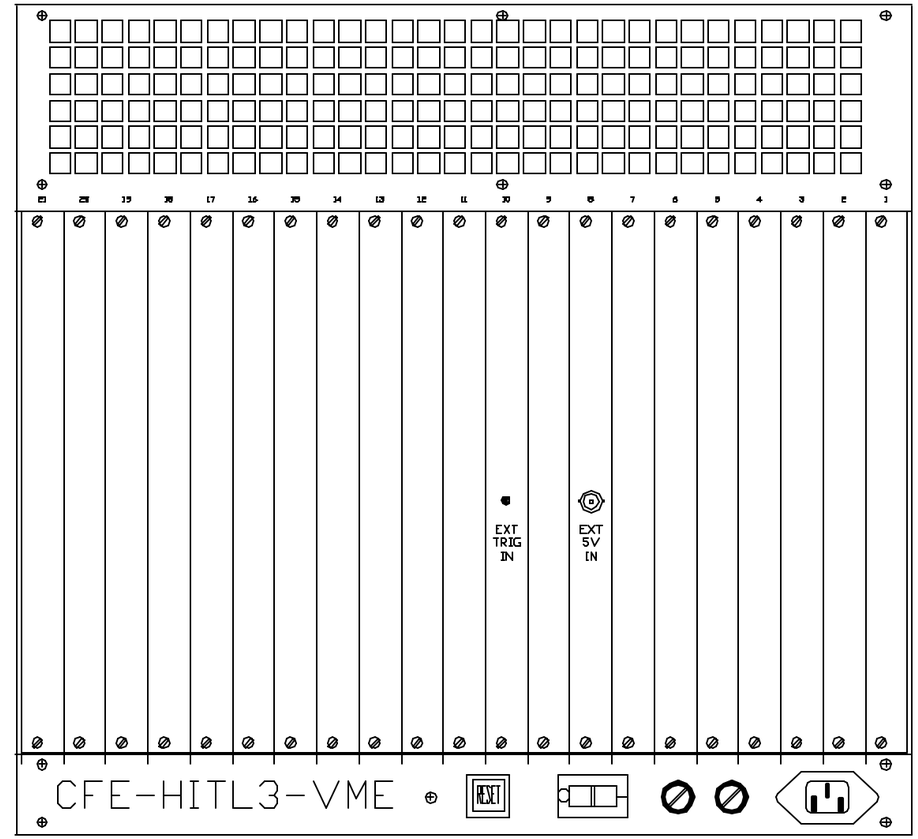

REAR VIEW

NOTE:

1. ALL UNUSED SLOTS, FRONT AND REAR

		30	see note 1	11	VME BLANK PANEL (ELECTRO SPACE ESFE-29B50)	
		1	SLOT 10	10	VMIVME 3122-01E 16 BIT ADC	
		1	SLOT 9	9	VMIVME 2170A-P10D DIGITAL OUTPUT	
		1	SLOT 8	8	VMIVME 1160A-403D DIGITAL INPUT	
		2	SLOT 6,7	7	VMIVME 1160A-2001 DIGITAL INPUT	
		1	SLOT 5	6	V294 GEN I/O MODULE	
		1	SLOT 4	5	V202 EVENT DELAY MODULE	
		1	SLOT 3	4	V108 UTILITY MODULE	94028094
		1	SLOT 2	3	NM-6702C MEMORY MODULE	
		1	SLOT 1	2	FRONT END COMPUTER	NVME2101-1
		1	N/A	1	VME CHASSIS	RHIC-93008000
-3	-2	-1	REF DESIGNATOR	ITEM NO.	DESCRIPTION	MAT'L DWG NO.&NO.
QTY REQD						

INTERPRET IN GENERAL ACCORDANCE WITH ASME Y14.24M-1989

UNLESS OTHERWISE SPECIFIED DIMENSIONS ARE IN INCHES

DECIMAL TOLERANCES
.X ± .030
.XX ± .015
.XXX ± .005
ANGULAR TOLERANCE ± 5°

OUTSTANDING ECN

NA FINISH

BREAK SHARP EDGES
MAX. XX MIN. XX

Q.A. CATEGORY A-3

		DATE
DRAWN BY	Schoenfeld	11/23/04
CHECKED BY		
DESIGN APPROVAL		
ENGINEER APPROVAL		
SUPVR. APPROVAL		

NEXT ASSEMBLY

BROOKHAVEN NATIONAL LABORATORY
ASSOCIATED UNIVERSITIES, INC.
UPTON, N.Y. 11973

CONTROLS WIRING DIAGRAM

BLDG HITL3

VME CHASSIS CFE-HITL3-VME

SIZE D | DRAWING NUMBER TALCOVE_HITL_79 | REV. A

MATERIAL: ——— SCALE: NA WEIGHT: - SHEET 78

*AUTOCAD

Schoenfeld, Controls 11/8/2004 4:01 PM talcove_hitl_80.dwg

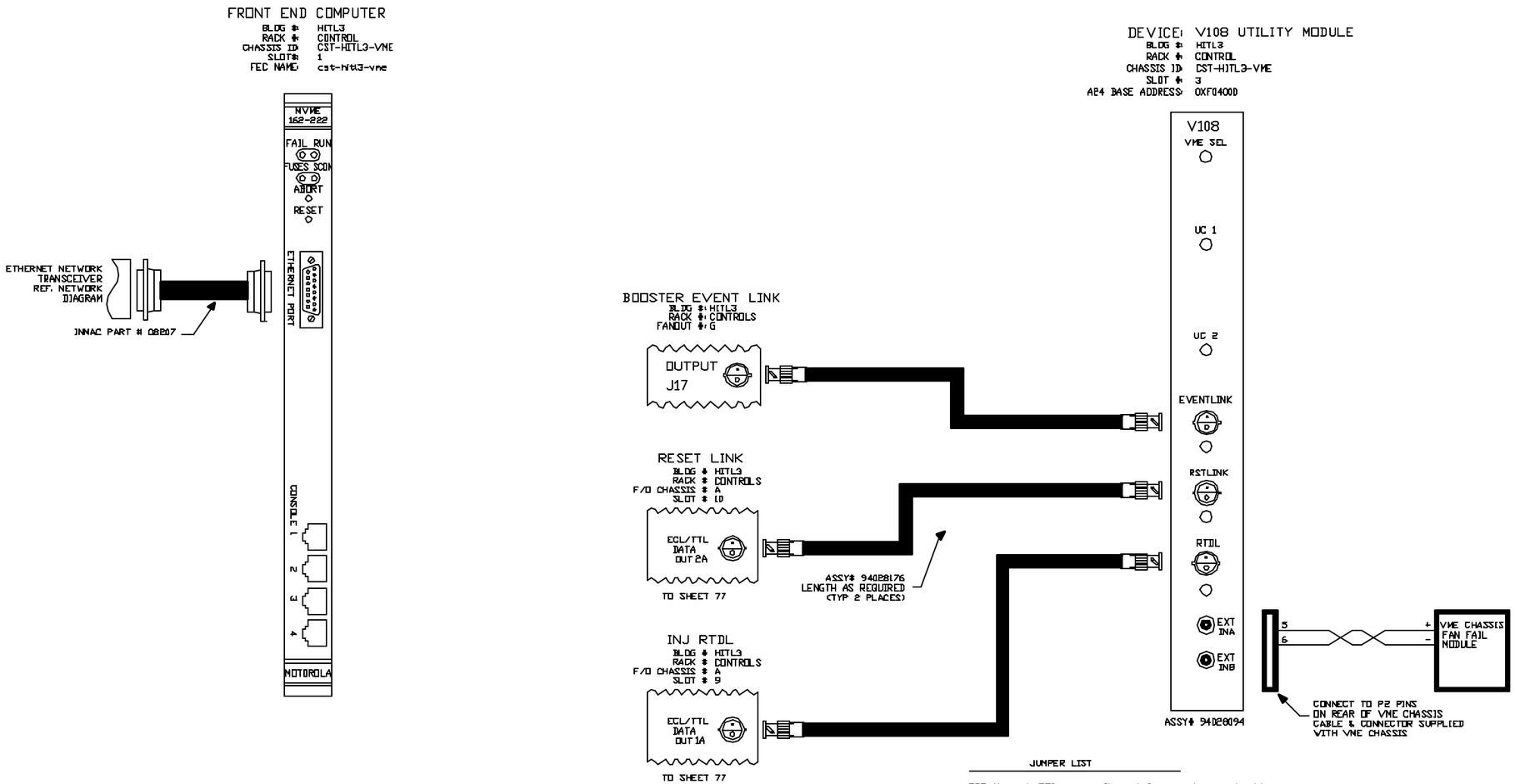

JUMPER LIST

E25 through E30 are configured for remote reset address at the time of board acceptance test.
DO NOT MODIFY!

Remote reset pulls VME SYS Reset.
E38-E60, E39-E61

A24 BASE ADDRESS= 4000h
E1-E13, E2-E14, E3-E15, E4-E16, E5-E17, E6-E18
E7-E19, E8-E20, E9-E21, E10-E22, E11-E24, E37-E23
SW1=OPEN
SW2=CLOSED
SW3=OPEN
SW4=OPEN

REV	ZONE	ECN NO.	DATE	BY	CKR	APP.

-3	-2	-1	REV DESIGNATION	ECN NO.	DESCRIPTION	MANF. DWG NO./ENG. NO.
ANY ASSY						

INTERPRET IN GENERAL ACCORDANCE WITH ASME Y14.24M-1989

UNLESS OTHERWISE SPECIFIED DIMENSIONS ARE IN INCHES
DECIMAL TOLERANCES
.X ±.030
.XX ±.015
.XXX ±.005
ANGULAR TOLERANCE ± .5°

NA FINISH
BREAK SHARP EDGES
MAX. XX MIN. XX

OUTSTANDING ECN

Q.A. CATEGORY A-3

		DATE
DRAWN BY	Schoenfeld	10/28/04
CHECKED BY		
DESIGN APPROVAL		
ENGINEER APPROVAL		
SURVEY APPROVAL		

NEXT ASSEMBLY

BROOKHAVEN NATIONAL LABORATORY
ASSOCIATED UNIVERSITIES, INC.
UPTON, N.Y. 11973

CONTROLS WIRING DIAGRAM

HITL3, CHASSIS CST-HITL3-VME

FT END COMP/V108 UTIL MODULE

SIZE D
TALCOVE_HITL_80
DRAWING NUMBER
REV. A

MATERIAL: ——— SCALE: NA WEIGHT: - SHEET 80

1 *AUTOCAD

Schoenfeld, Controls 11/8/2004 4:01 PM talcove_hitl_81.dwg

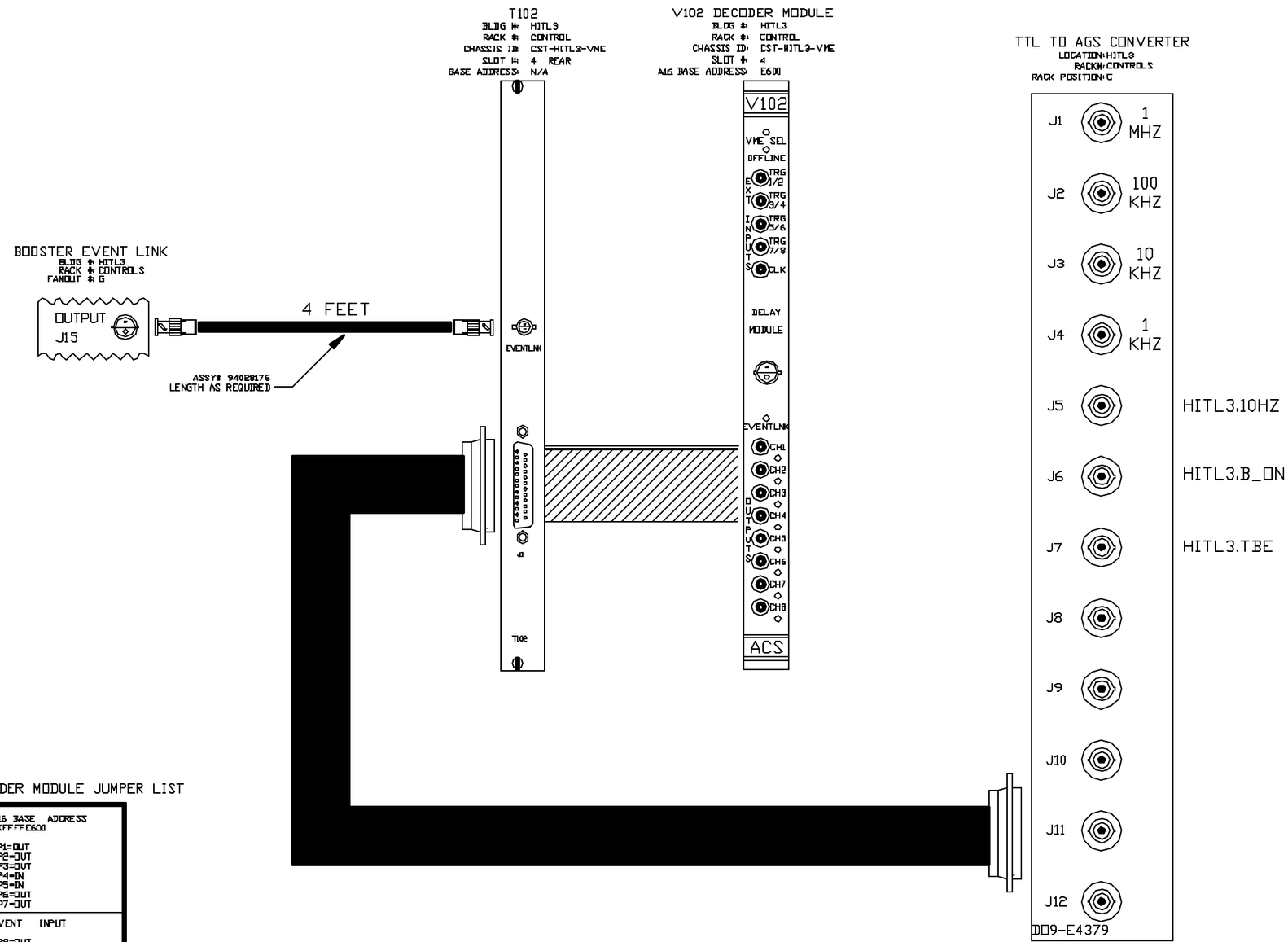

V102 DECODER MODULE JUMPER LIST

A16 BASE ADDRESS 0XFFFFE600 JP1=OUT JP2=OUT JP3=OUT JP4=IN JP5=IN JP6=OUT JP7=OUT
EVENT INPUT JP8=OUT JP9=IN JP10=IN
JP11=IN JP12=OUT JP13=OUT JP14=IN

REV.	ZONE	ECN NO.	DATE	BY	CKR	APP.

INTERPRET IN GENERAL ACCORDANCE WITH ASME Y14.24M-1989	Q.A. CATEGORY A-3	DATE	BROOKHAVEN NATIONAL LABORATORY ASSOCIATED UNIVERSITIES, INC. UPTON, N.Y. 11973
UNLESS OTHERWISE SPECIFIED DIMENSIONS ARE IN INCHES	DRAWN BY Schoenfeld	11/28/04	CONTROLS WIRING DIAGRAM
DECIMAL TOLERANCES .X ±.030 .XX ±.015 .XXX ±.005 ANGULAR TOLERANCE ± .5°	CHECKED BY		BLDG HITL3, CST-HITL3-VME
	DESIGN APPROVAL		V102 DECODER MODULE
	ENGINEER APPROVAL		
	SURVEY APPROVAL		SIZE D — TALCOVE_HITL_81 — REV. A
NA FINISH	BREAK SHARP EDGES MAX. XX MIN. XX	NEXT ASSEMBLY	DRAWING NUMBER
OUTSTANDING ECN			MATERIAL: ——— SCALE: NA WEIGHT: - SHEET 81

*AUTOCAD

Schoenfeld, Controls 11/8/2004 4:02 PM talcove_hitl_82.dwg

GPIB 1014 FOR 488 DEVICE CONTROLLERS

BLDG #: HITL3
RACK #: CONTROL
CHASSIS ID: CST-HITL3-VME
SLOT #: 19
A24 BASE ADDRESS: 0XF00D2000

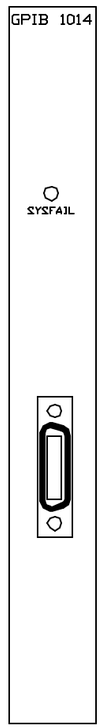

GPIB 1014 FOR TRANSLATOR 488 CONNECTIONS

BLDG #: HITL3
RACK #: CONTROL
CHASSIS ID: CST-HITL3-VME
SLOT #: 21
A24 BASE ADDRESS: 0XF00D2400

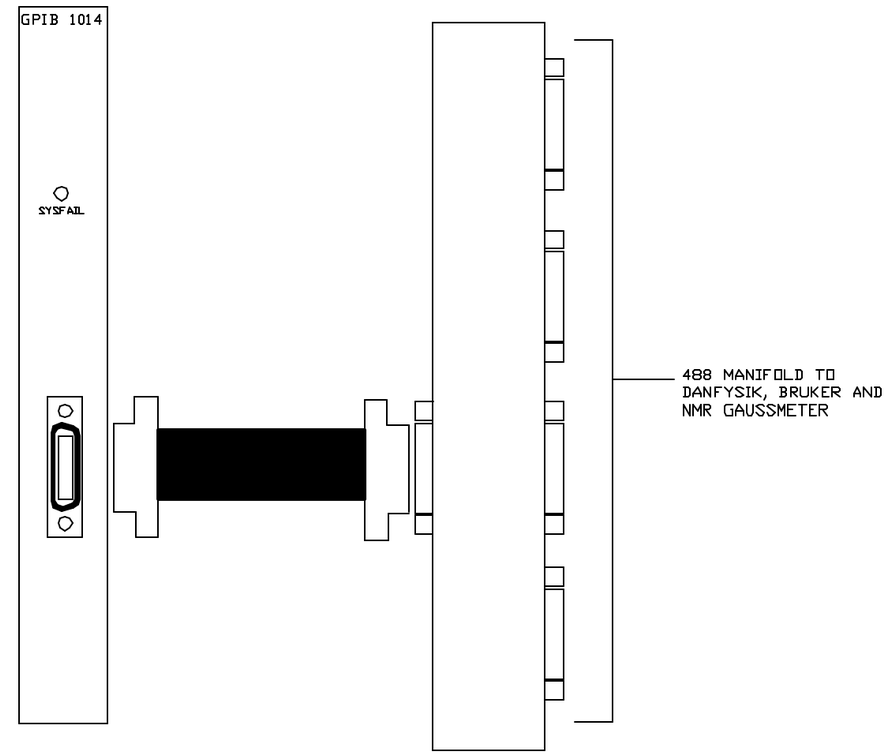

REV.	ZONE	ECN NO.	DATE	BY	CKR	APP.

-3	-2	-1	REF DESIGNATION	ECN NO.	DESCRIPTION	MAT'L DWG NO./ENG. NO.
ANY ASSEM						

INTERPRET IN GENERAL ACCORDANCE WITH ASME Y14.24M-1989
UNLESS OTHERWISE SPECIFIED DIMENSIONS ARE IN INCHES
DECIMAL TOLERANCES: .X ±.030, .XX ±.015, .XXX ±.005
ANGULAR TOLERANCE ± .5°
NA FINISH
BREAK SHARP EDGES
MAX. XX MIN. XX
OUTSTANDING ECN

Q.A. CATEGORY A-3

		DATE
DRAWN BY	Schoenfeld	5/29/97
CHECKED BY		
DESIGN APPROVAL		
ENGINEER APPROVAL		
SUPVR. APPROVAL		

NEXT ASSEMBLY

BROOKHAVEN NATIONAL LABORATORY
ASSOCIATED UNIVERSITIES, INC.
UPTON, N.Y. 11973

CONTROLS WIRING DIAGRAM

BLDG HITL3, CST-HITL3-VME

GPIB INTER FOR DEVICE CNTRLS

SIZE D

TALCOVE_HITL_82

DRAWING NUMBER

REV.

MATERIAL: ——— SCALE: NA WEIGHT: - SHEET 82

*AUTOCAD

Schoenfeld, Controls 11/8/2004 4:02 PM talcove_hitl_83.dwg

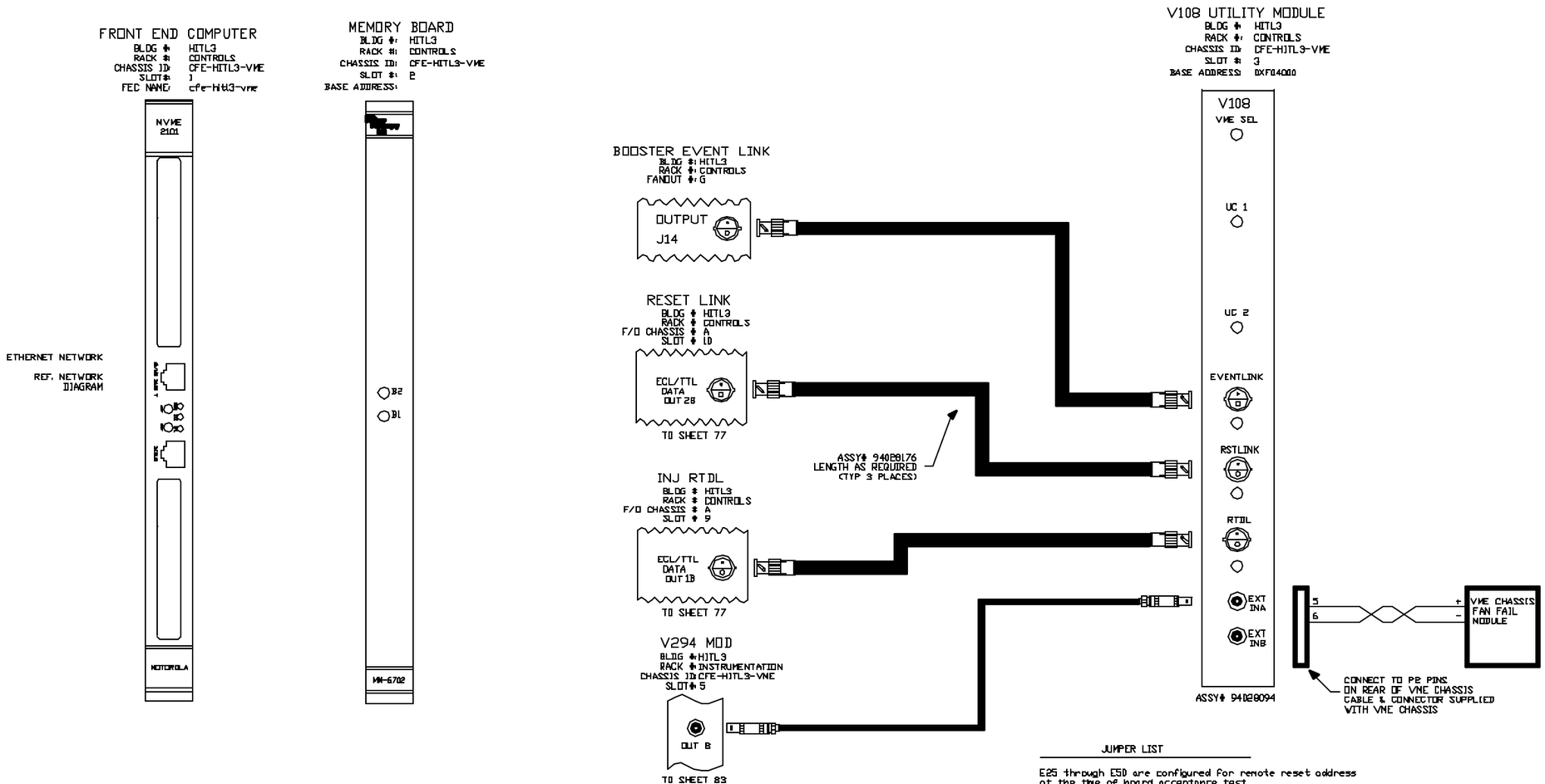

JUMPER LIST

E25 through E50 are configured for remote reset address at the time of board acceptance test.
DO NOT MODIFY!

Remote reset pulls VME SYS Reset.
E58-E60, E59-E61

A24 BASE ADDRESS= 4000h
E1-E13, E2-E14, E3-E15, E4-E16, E5-E17, E6-E18
E7-E19, E8-E20, E9-E21, E10-E22, E11-E24, E57-E63
SW1=OPEN
SW2=CLOSED
SW3=OPEN
SW4=OPEN

INTERPRET IN GENERAL ACCORDANCE WITH ASME Y14.24M-1989	Q.A. CATEGORY A-3	DATE	BROOKHAVEN NATIONAL LABORATORY UPTON, N.Y. 11973
UNLESS OTHERWISE SPECIFIED DIMENSIONS ARE IN INCHES	DRAWN BY Schoenfeld	11/8/04	CONTROLS WIRING DIAGRAM
DECIMAL TOLERANCES .X ±.030 .XX ±.015 .XXX ±.005 ANGULAR TOLERANCE ± .5°	CHECKED BY / DESIGN APPROVAL / ENGINEER APPROVAL / SUPVR. APPROVAL		BLDG HITL3, CHASSIS CFE-HITL3-VME
			FT END COMP /V108 UTIL MODULE
NA FINISH	BREAK SHARP EDGES MAX. XX MIN. XX	NEXT ASSEMBLY	SIZE D — TALCOVE_HITL_83 — REV. A — DRAWING NUMBER
OUTSTANDING ECN			MATERIAL: — SCALE: FULL WEIGHT: - SHEET 83

*AUTOCAD

Schoenfeld, Controls 11/8/2004 4:02 PM talcove_hitl_84.dwg

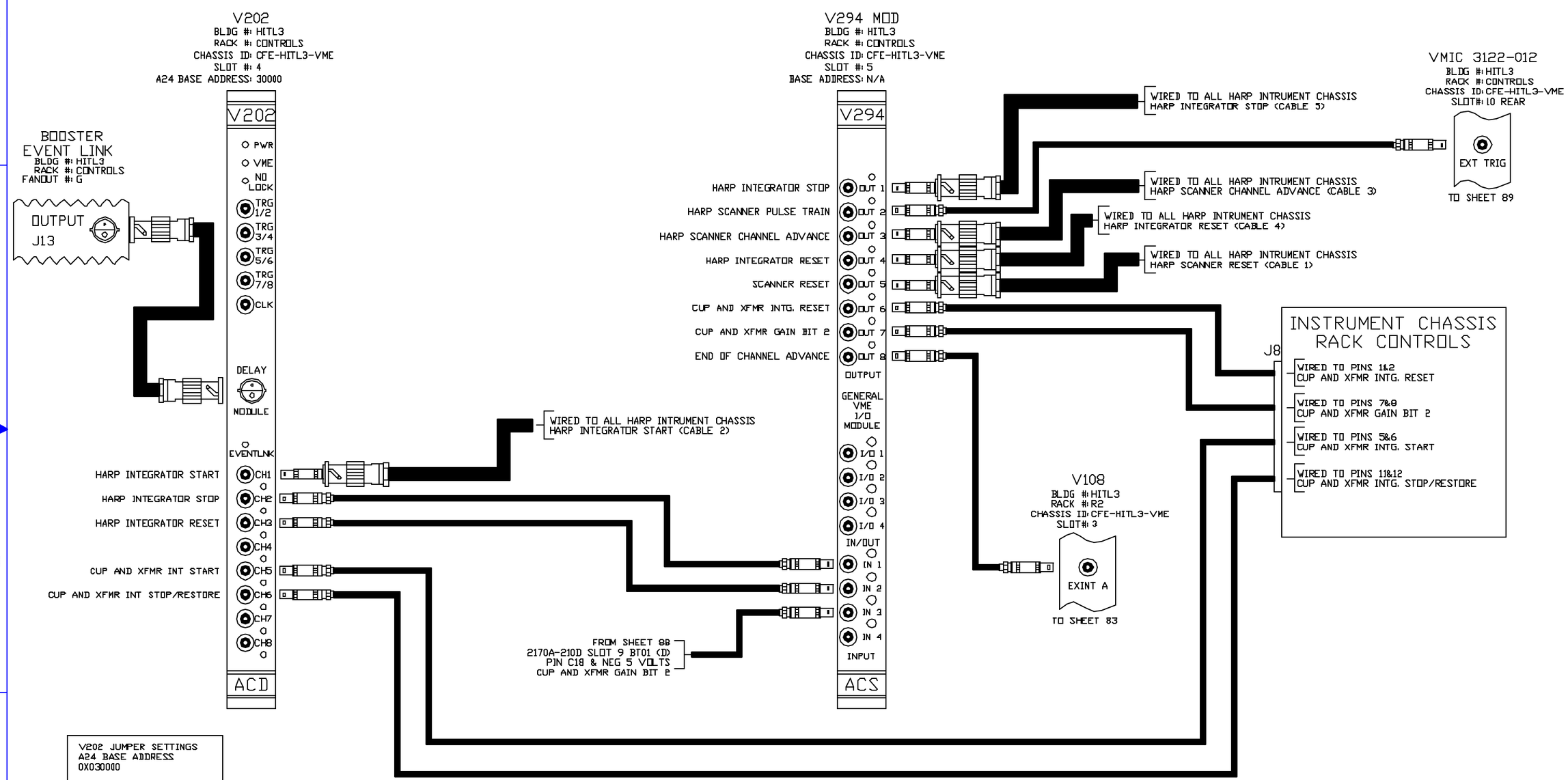

V202 JUMPER SETTINGS
A24 BASE ADDRESS
0X030000

SW1	JP1=IN
A16=1	JP2=PIN 1 TO 2
A17=1	JP3=IN
A18=0	JP4=OUT
A19=0	JP5=OUT
A20=0	JP6=OUT
A21=0	JP7=OUT
A22=0	JP8=OUT
A23=0	JP9=OUT
	JP10=IN
	JP11,12,13=IN

REV.	ZONE	ECN NO.	DATE	BY	CKR	APP.

-3	-4	-7	REF DESIGNATOR	ITEM NO.	DESCRIPTION	MFR. DWG NO./MFR. NO.
QTY REQD						

INTERPRET IN GENERAL ACCORDANCE WITH ASME Y14.24M-1989
UNLESS OTHERWISE SPECIFIED DIMENSIONS ARE IN INCHES
DECIMAL TOLERANCES .X ±.030 .XX ±.015 .XXX ±.005
ANGULAR TOLERANCE ± .5°
NA FINISH
BREAK SHARP EDGES MAX. XX MIN. XX
OUTSTANDING ECN

Q.A. CATEGORY A-3
DRAWN BY Schoenfeld DATE 10/12/04
CHECKED BY
DESIGN APPROVAL
ENGINEER APPROVAL
SUPVR. APPROVAL
NEXT ASSEMBLY

BROOKHAVEN NATIONAL LABORATORY
UPTON, N.Y. 11973
CONTROLS WIRING DIAGRAM
BLDG HITL3, CFE-HITL3-VME
V202 AND V294 WIRING DIAGRAM
SIZE D
TALCOVE_HITL_84
DRAWING NUMBER
REV. A
MATERIAL: ——— SCALE: FULL WEIGHT: - SHEET 84

*AUTOCAD

Schoenfeld, Controls 11/8/2004 4:02 PM talcove_hitl_85.dwg

BT01 I/O PANEL

BLDG #: HITL3
RACK #: CONTROLS
PANEL #: A

VMIC 1160A-200D (A)
BLDG #: HITL3
RACK #: CONTROLS
CHASSIS ID: CFE-HITL3-VME
SLOT #: 6
A16 BASE ADDRESS: E000

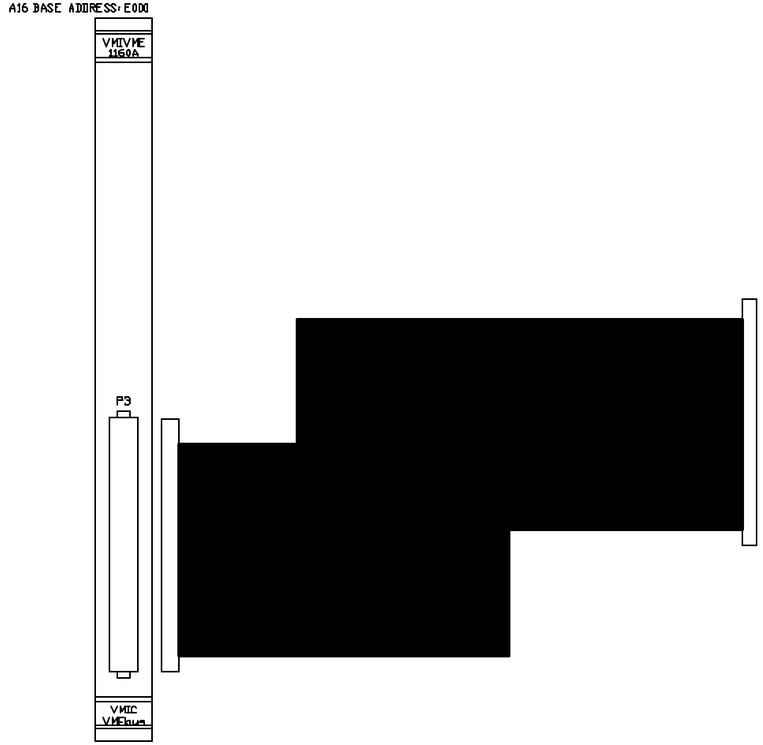

	TYPE OF SIGNAL	VAGO STRIP	NAME OF SIGNAL
A1	OUT STATUS HI	PIN 7 24BIP-155-2	HARP 1 TTL.24MW155
C1	OUT STATUS LOW	PIN 8 24BIP-155-2	
A2	IN STATUS HI	PIN 5 24BIP-155-2	
C2	IN STATUS LOW	PIN 6 24BIP-155-2	
A3	REM/LOC STATUS HI	PIN 15 24BIP-155-2	
C3	REM/LOC STATUS LOW	PIN 16 24BIP-155-2	
A4	OUT STATUS HI	PIN 11 24BIP-155-2	CUP 1 TTL.24FC155
C4	OUT STATUS LOW	PIN 12 24BIP-155-2	
A5	IN STATUS HI	PIN 9 24BIP-155-2	
C5	IN STATUS LOW	PIN 10 24BIP-155-2	
A6	REM/LOC STATUS HI	PIN 15 24BIP-155-2	
C6	REM/LOC STATUS LOW	PIN 16 24BIP-155-2	
A7	HI VOLT STATUS HI	PIN 13 24BIP-155-2	
C7	HI VOLT STATUS LOW	PIN 14 24BIP-155-2	
A8	OUT STATUS HI	PIN 7 23BIP-152-3	HARP 2 TTL.25MW152
C8	OUT STATUS LOW	PIN 8 23BIP-152-3	
A9	IN STATUS HI	PIN 5 23BIP-152-3	
C9	IN STATUS LOW	PIN 6 23BIP-152-3	
A10	REM/LOC STATUS HI	PIN 15 23BIP-152-3	
C10	REM/LOC STATUS LOW	PIN 16 23BIP-152-3	
A11	OUT STATUS HI	PIN 11 23BIP-152-3	CUP 2 TTL.25FC152
C11	OUT STATUS LOW	PIN 12 23BIP-152-3	
A12	IN STATUS HI	PIN 9 23BIP-152-3	
C12	IN STATUS LOW	PIN 10 23BIP-152-3	
A13	REM/LOC STATUS HI	PIN 15 23BIP-152-3	
C13	REM/LOC STATUS LOW	PIN 16 23BIP-152-3	
A14	HI VOLT STATUS HI	PIN 13 23BIP-152-3	
C14	HI VOLT STATUS LOW	PIN 14 23BIP-152-3	
A15	OUT STATUS HI	PIN 7 26BIP-042-4	HARP 3 TTL.26MW042
C15	OUT STATUS LOW	PIN 8 26BIP-042-4	
A16	IN STATUS HI	PIN 5 26BIP-042-4	
C16	IN STATUS LOW	PIN 6 26BIP-042-4	
A17	REM/LOC STATUS HI	PIN 15 26BIP-042-4	
C17	REM/LOC STATUS LOW	PIN 16 26BIP-042-4	
A18	OUT STATUS HI	PIN 11 26BIP-042-4	CUP 3 TTL.26FC042
C18	OUT STATUS LOW	PIN 12 26BIP-042-4	
A19	IN STATUS HI	PIN 9 26BIP-042-4	
C19	IN STATUS LOW	PIN 10 26BIP-042-4	
A20	REM/LOC STATUS HI	PIN 15 26BIP-042-4	
C20	REM/LOC STATUS LOW	PIN 16 26BIP-042-4	
A21	HI VOLT STATUS HI	PIN 13 26BIP-042-4	
C21	HI VOLT STATUS LOW	PIN 14 26BIP-042-4	
A22	OUT STATUS HI	PIN 7 26BIP-079-5	HARP 4 TTL.26MW079
C22	OUT STATUS LOW	PIN 8 26BIP-079-5	
A23	IN STATUS HI	PIN 5 26BIP-079-5	
C23	IN STATUS LOW	PIN 6 26BIP-079-5	
A24	REM/LOC STATUS HI	PIN 15 26BIP-079-5	
C24	REM/LOC STATUS LOW	PIN 16 26BIP-079-5	
A25	OUT STATUS HI	PIN 11 26BIP-079-5	CUP 4 TTL.26FC079
C25	OUT STATUS LOW	PIN 12 26BIP-079-5	
A26	IN STATUS HI	PIN 9 26BIP-079-5	
C26	IN STATUS LOW	PIN 10 26BIP-079-5	
A27	REM/LOC STATUS HI	PIN 15 26BIP-079-5	
C27	REM/LOC STATUS LOW	PIN 16 26BIP-079-5	
A28	HI VOLT STATUS HI	PIN 13 26BIP-079-5	
C28	HI VOLT STATUS LOW	PIN 14 26BIP-079-5	
A29	OUT STATUS HI	PIN 7 27BIP-154-6	HARP 5 TTL.27MW154
C29	OUT STATUS LOW	PIN 8 27BIP-154-6	
A30	IN STATUS HI	PIN 5 27BIP-154-6	
C30	IN STATUS LOW	PIN 6 27BIP-154-6	
A31	REM/LOC STATUS HI	PIN 15 27BIP-154-6	
C31	REM/LOC STATUS LOW	PIN 16 27BIP-154-6	
A32			
C32			

The following jumpers are installed:
J1, J3, J5, J7, J9, J11, J13, J15, J17, J19, J21, J23, J25,
J27, J29, J31, J33, J35, J37, J39, J41, J43, J45, J47,
J49, J51, J53, J55, J57, J59, J61, J63

U35
SW 1-3 OFF
SW 4-8 ON

U34
SW 1-8 ON

J65 AM2 For Short Supervisory I/O Access or Short
Nonprivileged I/O Access

INTERPRET IN GENERAL ACCORDANCE WITH ASME Y14.24M-1989	Q.A. CATEGORY A-3	DATE	BROOKHAVEN NATIONAL LABORATORY UPTON, N.Y. 11973
	DRAWN BY Schoenfeld	11/8/04	
UNLESS OTHERWISE SPECIFIED DIMENSIONS ARE IN INCHES	CHECKED BY		CONTROLS WIRING DIAGRAM
DECIMAL TOLERANCES .X ±.030 .XX ±.015 .XXX ±.005 ANGULAR TOLERANCE ± .5°	DESIGN APPROVAL		BLDG HITL3, CFE-HITL3-VME
	ENGINEER APPROVAL		VMIC 1160A-200D WIRING (A)
	SUPVR. APPROVAL		SIZE D — TALCOVE_HITL_85 — REV. A
OUTSTANDING ECN	NA FINISH	BREAK SHARP EDGES MAX. XX MIN. XX	NEXT ASSEMBLY — DRAWING NUMBER
			MATERIAL: — SCALE: FULL WEIGHT: - SHEET 85

*AUTOCAD

Schoenfeld, Controls 11/8/2004 4:03 PM talcove_hitl_86.dwg

BT01 I/O PANEL

BLDG #: HITL3
RACK #: CONTROLS
PANEL #: B

VMIC 1160A-200D (B)
BLDG #: HITL3
RACK #: CONTROLS
CHASSIS ID: CFE-HITL3-VME
SLOT #: 7
A16 BASE ADDRESS: E0E0

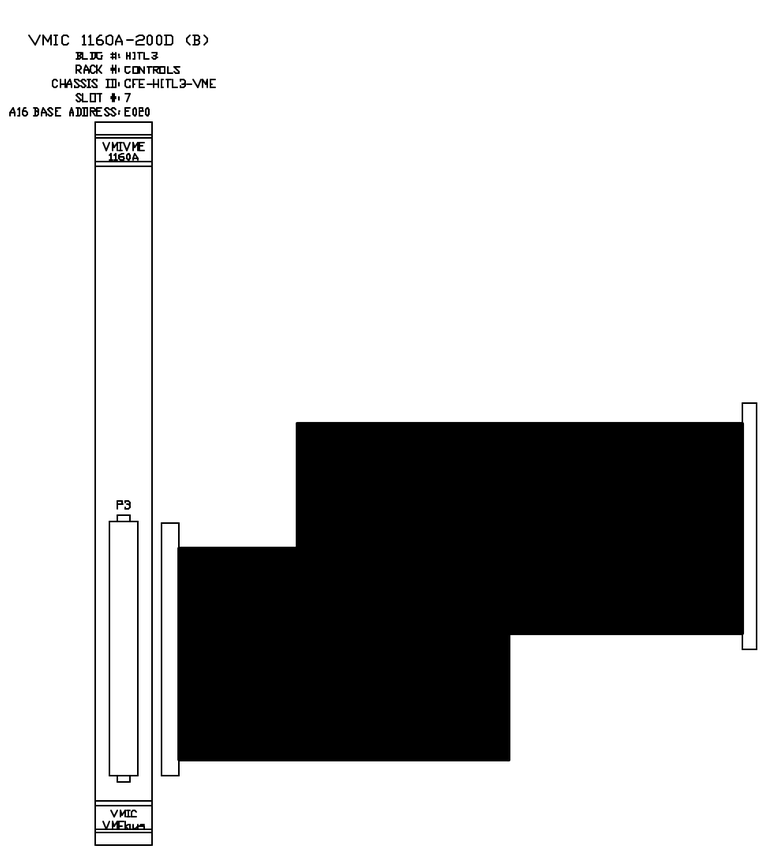

		TYPE OF SIGNAL	VAGO STRIP	NAME OF SIGNAL
A1		OUT STATUS HI	PIN 11 27BIP-154-6	
C1		OUT STATUS LOW	PIN 12 27BIP-154-6	
A2		IN STATUS HI	PIN 9 27BIP-154-6	
C2		IN STATUS LOW	PIN 10 27BIP-154-6	CUP 5
A3		REM/LOC STATUS HI	PIN 15 27BIP-154-6	TTL.27FC154
C3		REM/LOC STATUS LOW	PIN 16 27BIP-154-6	
A4		HI VOLT STATUS HI	PIN 13 27BIP-154-6	
C4		HI VOLT STATUS LOW	PIN 14 27BIP-154-6	
A5		OUT STATUS HI	PIN 7 28BIP-132-7	
C5		OUT STATUS LOW	PIN 8 28BIP-132-7	
A6		IN STATUS HI	PIN 5 28BIP-132-7	HARP 6
C6		IN STATUS LOW	PIN 6 28BIP-132-7	TTL.28MW132
A7		REM/LOC STATUS HI	PIN 15 28BIP-132-7	
C7		REM/LOC STATUS LOW	PIN 16 28BIP-132-7	
A8		OUT STATUS HI	PIN 11 28BIP-132-7	
C8		OUT STATUS LOW	PIN 12 28BIP-132-7	
A9		IN STATUS HI	PIN 9 28BIP-132-7	
C9		IN STATUS LOW	PIN 10 28BIP-132-7	CUP 6
A10		REM/LOC STATUS HI	PIN 15 28BIP-132-7	TTL.28FC132
C10		REM/LOC STATUS LOW	PIN 16 28BIP-132-7	
A11		HI VOLT STATUS HI	PIN 13 28BIP-132-7	
C11		HI VOLT STATUS LOW	PIN 14 28BIP-132-7	
A12		OUT STATUS HI	PIN 7 29BIP-090-8	
C12		OUT STATUS LOW	PIN 8 29BIP-090-8	
A13		IN STATUS HI	PIN 5 29BIP-090-8	HARP 7
C13		IN STATUS LOW	PIN 6 29BIP-090-8	TTL.29MW090
A14		REM/LOC STATUS HI	PIN 15 29BIP-090-8	
C14		REM/LOC STATUS LOW	PIN 16 29BIP-090-8	
A15		OUT STATUS HI	PIN 7 29BIP-141-9	
C15		OUT STATUS LOW	PIN 8 29BIP-141-9	
A16		IN STATUS HI	PIN 5 29BIP-141-9	
C16		IN STATUS LOW	PIN 6 29BIP-141-9	CUP 7
A17		REM/LOC STATUS HI	PIN 15 29BIP-141-9	TTL.29FC141
C17		REM/LOC STATUS LOW	PIN 16 29BIP-141-9	
A18		HI VOLT STATUS HI	PIN 13 29BIP-141-9	
C18		HI VOLT STATUS LOW	PIN 14 29BIP-141-9	
A19		OUT STATUS HI	PIN 11 29BIP-141-9	
C19		OUT STATUS LOW	PIN 12 29BIP-141-9	
A20		IN STATUS HI	PIN 9 29BIP-141-9	HARP 8
C20		IN STATUS LOW	PIN 10 29BIP-141-9	TTL.29FC141
A21		REM/LOC STATUS HI	PIN 15 29BIP-141-9	
C21		REM/LOC STATUS LOW	PIN 16 29BIP-141-9	
A22				
C22				
A23				
C23				
A24				
C24				
A25				
C25				
A26				
C26				
A27				
C27				
A28				
C28				
A29				
C29				
A30				
C30				
A31				
C31				
A32				
C32				

The following jumpers are installed:
J1, J3, J5, J7, J9, J11, J13, J15, J17, J19, J21, J23, J25,
J27, J29, J31, J33, J35, J37, J39, J41, J43, J45, J47,
J49, J51, J53, J55, J57, J59, J61, J63

U35
SW 1-3 OFF
SW 4-8 ON

U34
SW 1-2 ON
SW 3 OFF
SW 4-8 ON

J65 AM2 For Short Supervisory I/O Access or Short
Nonprivileged I/O Access

REV.	ZONE	ECN NO.	DATE	BY	CHKR	APP.

-3	-2	-1	REF DESIGNATION	ECN NO.	DESCRIPTION	MFG. DWG NO./INS. NO.
QTY REQD						

INTERPRET IN GENERAL ACCORDANCE WITH ASME Y14.24M-1989
UNLESS OTHERWISE SPECIFIED DIMENSIONS ARE IN INCHES
DECIMAL TOLERANCES .X ±.030 .XX ±.015 .XXX ±.005
ANGULAR TOLERANCE ± .5°
NA
FINISH
BREAK SHARP EDGES
MAX. XX MIN. XX
OUTSTANDING ECN

Q.A. CATEGORY A-3

		DATE
DRAWN BY	Schoenfeld	11/8/04
CHECKED BY		
DESIGN APPROVAL		
ENGINEER APPROVAL		
SUPVR. APPROVAL		

NEXT ASSEMBLY

BROOKHAVEN NATIONAL LABORATORY
UPTON, N.Y. 11973
CONTROLS WIRING DIAGRAM
BLDG HITL3, CFE-HITL3-VME
VMIC 1160A-200D WIRING (B)

SIZE D | TALCOVE_HITL_86 | REV. A
DRAWING NUMBER

MATERIAL: ——— SCALE: FULL WEIGHT: - SHEET 86

1 *AUTOCAD

Schoenfeld, Controls 11/8/2004 4:03 PM talcove_hitl_87.dwg

BT01 I/O PANEL

BLDG #:HITL3
RACK #:VACUUM
PANEL #:C

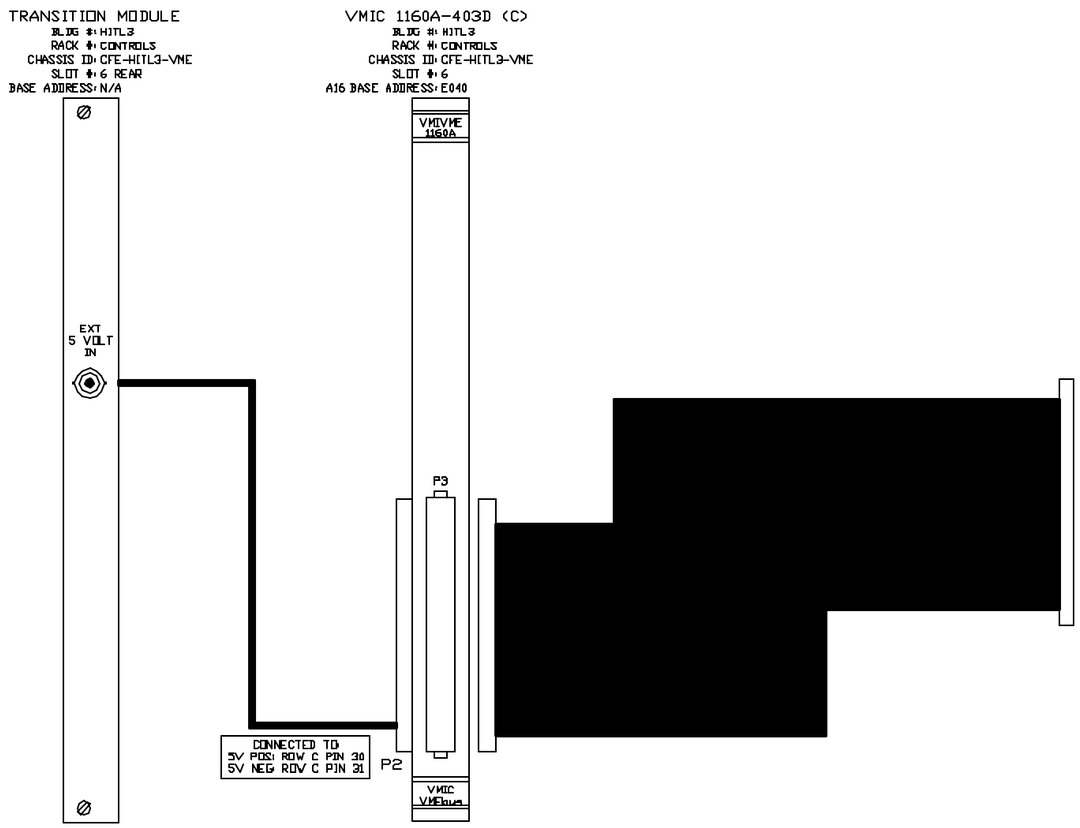

		TYPE OF SIGNAL	WAGO STRIP	NAME OF SIGNAL
A1		OPEN STATUS HI	PIN 28 21VP152	VAC VALVE 1 21VP153
C1		OPEN STATUS LOW	PIN 36 21VP152	
A2		CLOSED STATUS HI	PIN 37 21VP152	
C2		CLOSED STATUS LOW	PIN 36 21VP152	
A3		OPEN STATUS HI	PIN 11 24VP155	VAC VALVE 2 21VP154
C3		OPEN STATUS LOW	PIN 3 24VP155	
A4		CLOSED STATUS HI	PIN 4 24VP155	
C4		CLOSED STATUS LOW	PIN 3 24VP155	
A5		OPEN STATUS HI	PIN 28 24VP155	VAC VALVE 3 24VP156
C5		OPEN STATUS LOW	PIN 36 24VP155	
A6		CLOSED STATUS HI	PIN 37 24VP155	
C6		CLOSED STATUS LOW	PIN 36 24VP155	
A7		OPEN STATUS HI	PIN 11 25VC152	VAC VALVE 4 25VP151
C7		OPEN STATUS LOW	PIN 3 25VC152	
A8		CLOSED STATUS HI	PIN 4 25VC152	
C8		CLOSED STATUS LOW	PIN 3 25VC152	
A9		OPEN STATUS HI	PIN 28 25VC152	VAC VALVE 5 25VP153
C9		OPEN STATUS LOW	PIN 36 25VC152	
A10		CLOSED STATUS HI	PIN 37 25VC152	
C10		CLOSED STATUS LOW	PIN 36 25VC152	
A11		OPEN STATUS HI	PIN 11 26VC042	VAC VALVE 6 26VP041
C11		OPEN STATUS LOW	PIN 3 26VC042	
A12		CLOSED STATUS HI	PIN 4 26VC042	
C12		CLOSED STATUS LOW	PIN 3 26VC042	
A13		OPEN STATUS HI	PIN 28 26VC042	VAC VALVE 7 26VP043
C13		OPEN STATUS LOW	PIN 36 26VC042	
A14		CLOSED STATUS HI	PIN 37 26VC042	
C14		CLOSED STATUS LOW	PIN 36 26VC042	
A15		OPEN STATUS HI	PIN 11 26VC079	VAC VALVE 8 26VP078
C15		OPEN STATUS LOW	PIN 3 26VC079	
A16		CLOSED STATUS HI	PIN 4 26VC079	
C16		CLOSED STATUS LOW	PIN 3 26VC079	
A17		OPEN STATUS HI	PIN 28 26VC079	VAC VALVE 9 26VP080
C17		OPEN STATUS LOW	PIN 36 26VC079	
A18		CLOSED STATUS HI	PIN 37 26VC079	
C18		CLOSED STATUS LOW	PIN 36 26VC079	
A19		OPEN STATUS HI	PIN 11 27VC154	VAC VALVE 10 27VP153
C19		OPEN STATUS LOW	PIN 3 27VC154	
A20		CLOSED STATUS HI	PIN 4 27VC154	
C20		CLOSED STATUS LOW	PIN 3 27VC154	
A21		OPEN STATUS HI	PIN 28 27VC154	VAC VALVE 11 27VP156
C21		OPEN STATUS LOW	PIN 36 27VC154	
A22		CLOSED STATUS HI	PIN 37 27VC154	
C22		CLOSED STATUS LOW	PIN 36 27VC154	
A23		OPEN STATUS HI	PIN 11 28VC132	VAC VALVE 12 28VP131
C23		OPEN STATUS LOW	PIN 3 28VC132	
A24		CLOSED STATUS HI	PIN 4 28VC132	
C24		CLOSED STATUS LOW	PIN 3 28VC132	
A25		OPEN STATUS HI	PIN 28 28VC132	VAC VALVE 13 28VP133
C25		OPEN STATUS LOW	PIN 36 28VC132	
A26		CLOSED STATUS HI	PIN 37 28VC132	
C26		CLOSED STATUS LOW	PIN 36 28VC132	
A27		OPEN STATUS HI	PIN 20 27VC154	VAC VALVE 14 28VA002
C27		OPEN STATUS LOW	PIN 17 27VC154	
A28		CLOSED STATUS HI	PIN 19 27VC154	
C28		CLOSED STATUS LOW	PIN 17 27VC154	
A29				
C29				
A30				
C30				
A31				
C31				
A32				
C32				

The following jumpers are installed:
J1, J3, J5, J7, J9, J11, J13, J15, J17, J19, J21, J23, J25,
J27, J29, J31, J33, J35, J37, J39, J41, J43, J45, J47,
J49, J51, J53, J55, J57, J59, J61, J63

U35
SW 1-3 OFF
SW 4-8 ON

U34
SW 1 ON
SW 2 OFF
SW 3-8 ON

J65 AM2 For Short Supervisory I/O Access or Short
Nonprivileged I/O Access

INTERPRET IN GENERAL ACCORDANCE WITH ASME Y14.24M-1989	Q.A. CATEGORY A-3	DATE	BROOKHAVEN NATIONAL LABORATORY
	DRAWN BY Schoenfeld	11/18/04	UPTON, N.Y. 11973
UNLESS OTHERWISE SPECIFIED DIMENSIONS ARE IN INCHES	CHECKED BY		CONTROLS WIRING DIAGRAM
DECIMAL TOLERANCES .X ±.030 .XX ±.015 .XXX ±.005 ANGULAR TOLERANCE ±.5°	DESIGN APPROVAL		BLDG HITL3, CFE-HITL3-VME
	ENGINEER APPROVAL		VMIC 1160A-403D WIRING (C)
	SURVEY APPROVAL		SIZE D — TALCOVE_HITL_87 — REV. A
NA FINISH	BREAK SHARP EDGES MAX. XX MIN. XX	NEXT ASSEMBLY	DRAWING NUMBER
OUTSTANDING ECN			MATERIAL: — SCALE: FULL WEIGHT: - SHEET 87

*AUTOCAD

Schoenfeld, Controls 11/8/2004 4:03 PM talcove_hitl_88.dwg

BT01 I/O PANEL

BLDG #: HITL3
RACK #: CONTROLS
PANEL #: D

VMIC 2170A-210D
BLDG #: HITL3
RACK #: CONTROLS
CHASSIS ID: CFE-HITL3-VME
SLOT #: 9
A16 BASE ADDRESS: E100

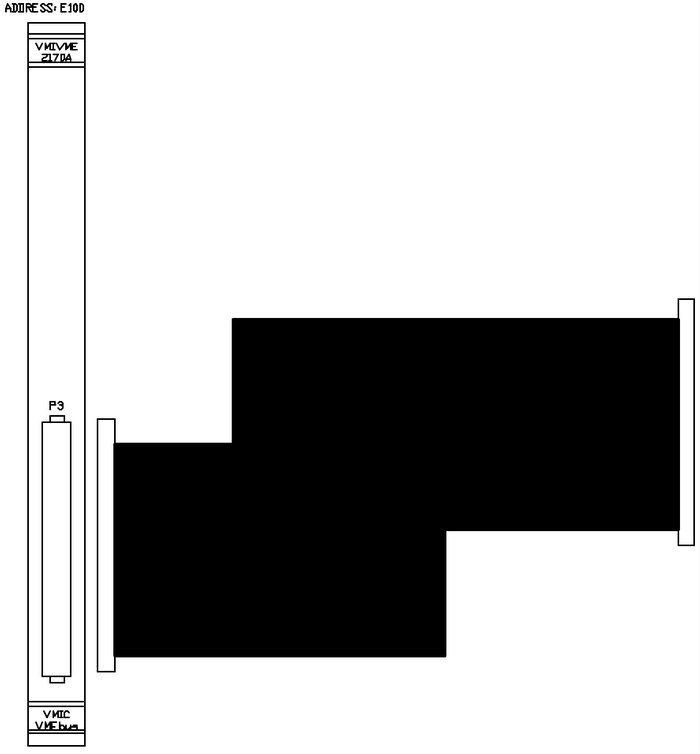

	TYPE OF SIGNAL	WAGO STRIP	NAME OF DEVICE
A1	HARP 1 CMD LOW	PIN 2 INST1-1 (5V POS)	TTL.24MW155
C1	HARP 1 CMD HI	PIN 1 INST1-1	
A2	FC 1 CMD LOW	PIN 4 INST1-1 (5V POS)	TTL.24FC155
C2	FC 1 CMD HI	PIN 3 INST1-1	
A3	HARP 2 CMD LOW	PIN 2 INST1-2 (5V POS)	TTL.25MW152
C3	HARP 2 CMD HI	PIN 1 INST1-2	
A4	FC 2 CMD LOW	PIN 4 INST1-2 (5V POS)	TTL.25FC152
C4	FC 2 CMD HI	PIN 3 INST1-2	
A5	HARP 3 CMD LOW	PIN 2 INST1-3 (5V POS)	TTL.26MW042
C5	HARP 3 CMD HI	PIN 1 INST1-3	
A6	FC 3 CMD LOW	PIN 4 INST1-3 (5V POS)	TTL.26FC042
C6	FC 3 CMD HI	PIN 3 INST1-3	
A7	HARP 4 CMD LOW	PIN 2 INST1-4 (5V POS)	TTL.26MW079
C7	HARP 4 CMD HI	PIN 1 INST1-4	
A8	FC 4 CMD LOW	PIN 4 INST1-4 (5V POS)	TTL.26FC079
C8	FC 4 CMD HI	PIN 3 INST1-4	
A9	HARP 5 CMD LOW	PIN 2 INST1-5 (5V POS)	TTL.27MW154
C9	HARP 5 CMD HI	PIN 1 INST1-5	
A10	FC 5 CMD LOW	PIN 4 INST1-5 (5V POS)	TTL.27FC154
C10	FC 5 CMD HI	PIN 3 INST1-5	
A11	HARP 6 CMD LOW	PIN 2 INST1-6 (5V POS)	TTL.28MW132
C11	HARP 6 CMD HI	PIN 1 INST1-6	
A12	FC 6 CMD LOW	PIN 4 INST1-6 (5V POS)	TTL.28FC132
C12	FC 6 CMD HI	PIN 3 INST1-6	
A13	HARP 7 CMD LOW	PIN 2 INST1-5 (5V POS)	TTL.29MW090
C13	HARP 7 CMD HI	PIN 1 INST1-5	
A14	FC 7 CMD LOW	PIN 2 INST1-6 (5V POS)	TTL.29FC141
C14	FC 7 CMD HI	PIN 1 INST1-6	
A15	HARP 8 CMD LOW	PIN 4 INST1-5 (5V POS)	TTL.29MW141
C15	HARP 8 CMD HI	PIN 3 INST1-5	
A16	HARP GAIN CMD LOW	PIN 2 8 PIN (5V POS)	
C16	HARP GAIN CMD HI	PIN 1 8 PIN	
A17	CUP/XFMR GAIN 1 CMD LOW	PIN 4 8 PIN (5V POS)	
C17	CUP/XFMR GAIN 1 CMD HI	PIN 3 8 PIN	
A18	MODE CMD LOW	5 VOLT NEG	TO SHEET B4
C18	MODE GAIN CMD HI	V294 INPUT 3	
A19	CUP/XFMR GAIN 2 CMD LOW	PIN 6 8 PIN (5V POS)	
C19	CUP/XFMR GAIN 2 CMD HI	PIN 5 8 PIN	
A20			
C20			
A21			
C21			
A22			
C22			
A23			
C23			
A24			
C24			
A25			
C25			
A26			
C26			
A27			
C27			
A28			
C28			
A29			
C29			
A30			
C30			
A31			
C31			
A32			
C32			

JUMPER SETTING:
ADDRESS: E100
A2-A7=IN
A8=OUT
A9-A12=IN
A13-A15=OUT
JA1=OUT

-3 -2 -1 QTY REQD	REF DESIGNATION / ECN NO.	DESCRIPTION	MATL DWG ACLINE NO.
INTERPRET IN GENERAL ACCORDANCE WITH ASME Y14.24M-1989	Q.A. CATEGORY A-3	DATE	BROOKHAVEN NATIONAL LABORATORY UPTON, N.Y. 11973
	DRAWN BY Schoenfeld	11/8/04	
UNLESS OTHERWISE SPECIFIED DIMENSIONS ARE IN INCHES	CHECKED BY		CONTROLS WIRING DIAGRAM
DECIMAL TOLERANCES: .X ±.030 .XX ±.015 .XXX ±.005 ANGULAR TOLERANCE ± .5°	DESIGN APPROVAL		BLDG HITL3, CFE-HITL3-VME
	ENGINEER APPROVAL		VMIC 2170A-210D WIRING
	SUPVR. APPROVAL		SIZE D — TALCOVE_HITL_88 — REV. A
OUTSTANDING ECN	NA FINISH	BREAK SHARP EDGES MAX. XX MIN. XX	NEXT ASSEMBLY — DRAWING NUMBER
			MATERIAL: ——— SCALE: FULL WEIGHT: - SHEET 88

1 *AUTOCAD

REV.	ZONE	ECN NO.	DATE	BY	CKR	APP.

Schoenfeld, Controls 11/8/2004 4:04 PM talcove_hitl_89.dwg

BT01 I/O PANEL

BLDG #: HITL3
RACK #: CONTROLS
PANEL #: E

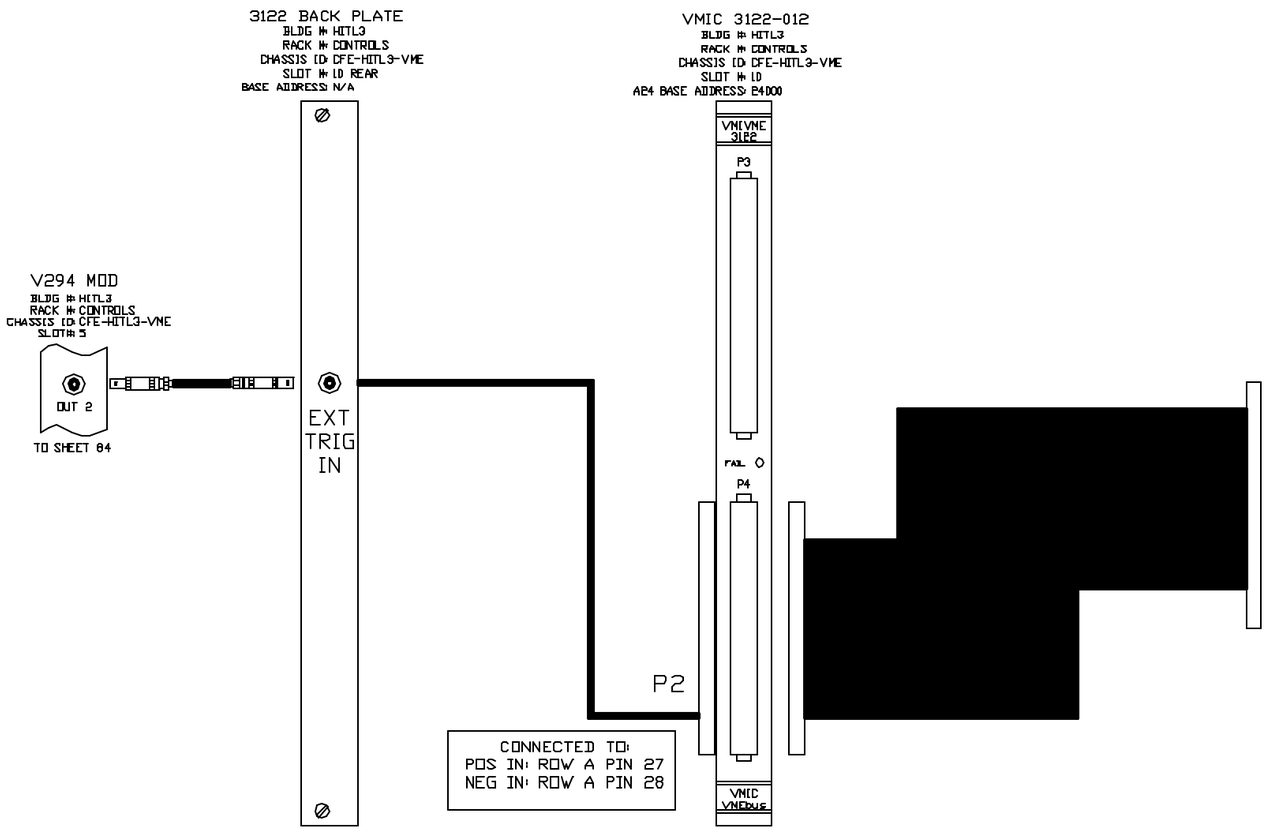

JUMPER SETTINGS
ADDRESS 24000
A12-A13=IN
A14=OUT
A15-A16=IN
A17=OUT
A18-A31=IN

		36 PIN J6 CONN FROM INSTR CHASSIS	NAME OF SIGNAL
A1	HARP 1 VOLTAGE HI	PIN 1 CABLE H BLK	TTL.24MW155
C1	HARP 1 VOLTAGE LOW	PIN 32-34 CABLE H SHIELD	
A2	HARP 2 VOLTAGE HI	PIN 2 CABLE H RED	TTL.25MW152
C2	HARP 2 VOLTAGE LOW	PIN 32-34 CABLE H SHIELD	
A3	HARP 3 VOLTAGE HI	PIN 3 CABLE G BLK	TTL.26MW042
C3	HARP 3 VOLTAGE LOW	PIN 32-34 CABLE G SHIELD	
A4	HARP 4 VOLTAGE HI	PIN 4 CABLE G RED	TTL.26MW079
C4	HARP 4 VOLTAGE LOW	PIN 32-34 CABLE G SHIELD	
A5	HARP 5 VOLTAGE HI	PIN 5 CABLE K BLK	TTL.27MW154
C5	HARP 5 VOLTAGE LOW	PIN 32-34 CABLE K SHIELD	
A6	HARP 6 VOLTAGE HI	PIN 6 CABLE K RED	TTL.28MW132
C6	HARP 6 VOLTAGE LOW	PIN 32-34 CABLE K SHIELD	
A7	HARP 7 VOLTAGE HI	PIN 7 CABLE J BLK	TTL.29MW090
C7	HARP 7 VOLTAGE LOW	PIN 32-34 CABLE J SHIELD	
A8	HARP 8 VOLTAGE HI	PIN 8 CABLE J RED	TTL.29MW141
C8	HARP 8 VOLTAGE LOW	PIN 32-34 CABLE J SHIELD	
A9			
C9			
A10			
C10			
A11			
C11			
A12			
C12			
A13			
C13			
A14			
C14			
A15			
C15			
A16			
C16			
A17	CUP 1 VOLTAGE HI	PIN 9 CABLE S BLK	TTL.24FC155
C17	CUP 1 VOLTAGE LOW	PIN 32-34 CABLE S SHIELD	
A18	CUP 2 VOLTAGE HI	PIN 10 CABLE S RED	TTL.25FC152
C18	CUP 2 VOLTAGE LOW	PIN 32-34 CABLE S SHIELD	
A19	CUP 3 VOLTAGE HI	PIN 11 CABLE M BLK	TTL.26FC042
C19	CUP 3 VOLTAGE LOW	PIN 32-34 CABLE M SHIELD	
A20	CUP 4 VOLTAGE HI	PIN 12 CABLE M RED	TTL.26FC079
C20	CUP 4 VOLTAGE LOW	PIN 32-34 CABLE M SHIELD	
A21	CUP 5 VOLTAGE HI	PIN 13 CABLE L BLK	TTL.27FC154
C21	CUP 5 VOLTAGE LOW	PIN 32-34 CABLE L SHIELD	
A22	CUP 6 VOLTAGE HI	PIN 14 CABLE L RED	TTL.28FC132
C22	CUP 6 VOLTAGE LOW	PIN 32-34 CABLE L SHIELD	
A23	CUP 7 VOLTAGE HI	PIN 15 CABLE N RED	TTL.29FC141
C23	CUP 7 VOLTAGE LOW	PIN 32-34 CABLE N BLK	
A24			
C24			
A25	XFORMER 1 VOLT HI	PIN 23 CABLE P BLK	25XF149
C25	XFORMER 1 VOLT LOW	PIN 32-34 CABLE P SHIELD	
A26	XFORMER 1 VOLT HI	PIN 24 CABLE 11 RED	27XF149
C26	XFORMER 1 VOLT LOW	PIN 32-34 CABLE 11 BLK	
A27	XFORMER 1 VOLT HI	PIN 22 CABLE P RED	29XF104
C27	XFORMER 1 VOLT LOW	PIN 32-34 CABLE P SHIELD	
A28			
C28			
A29			
C29			
A30			
C30			
A31			
C31			
A32			
C32			

-3 -2 -1 ANY ASSEM	REF DESIGNATION	FSCM NO.	DESCRIPTION	MANF. DWG HOLDING NO.

INTERPRET IN GENERAL ACCORDANCE WITH ASME Y14.24M-1989
UNLESS OTHERWISE SPECIFIED DIMENSIONS ARE IN INCHES
DECIMAL TOLERANCES: .X ±.030 .XX ±.015 .XXX ±.005
ANGULAR TOLERANCE ± .5°
FINISH: NA
BREAK SHARP EDGES MAX. XX MIN. XX
OUTSTANDING ECN

Q.A. CATEGORY A-3

		DATE
DRAWN BY	Schoenfeld	11/13/04
CHECKED BY		
DESIGN APPROVAL		
ENGINEER APPROVAL		
SURVEY APPROVAL		

NEXT ASSEMBLY

BROOKHAVEN NATIONAL LABORATORY
UPTON, N.Y. 11973
CONTROLS WIRING DIAGRAM
BLDG HITL3, CFE-HITL3-VME
3122 BREAKOUT WIRING

SIZE D | DRAWING NUMBER TALCOVE_HITL_89 | REV. A

MATERIAL: ——— SCALE: FULL WEIGHT: - SHEET 88

*AUTOCAD