REVISIONS							
REV	ZONE	ECN NO.	DESCRIPTION	BY	DATE	CHK	APP
B	----	------	RELEASED	MJ	4-96	RC	RC

P2A-A	1	DGND
P2A-B	2	PERMIT+I
P2A-C	3	PERMIT-I
P2A-D	4	EVN_LNK+
P2A-E	5	EVN_LNK-
P2A-F	6	BLU_LK+I
P2A-G	7	BLU_LK-I
P2A-H	8	YEL_LK+I
P2A-J	9	YEL_LK-I
P2A-J	10	PERMIT+O
P2A-K	11	PERMIT-O
P2A-L	12	BLU_LK+O
P2A-M	13	BLU_LK-O
P2A-N	14	YEL_LK+O
P2A-O	15	YEL_LK-O
P2A-P	16	BLU_DUMP
P2A-Q	17	YEL_DUMP
P2A-R	18	DMP_EVNT
P2A-S	19	DMP_LEVL
P2A-T	20	B_INTLOC
P2A-U	21	Y_INTLOC
P2A-V	22	
P2A-W	23	BLU_IDX
P2A-X	24	YEL_IDX
P2A-Y	25	PERMIT1
P2A-Z	26	PERMIT2
P2A-AA	27	PERMIT3
P2A-AB	28	PERMIT4
P2A-AC	29	PERMIT5
P2A-AD	30	PERMIT6
P2A-AE	31	PERMIT7
P2A-AF	32	PERMIT8

P2B-A	1	+5V
P2B-B	2	DGND
P2B-C	3	RESERVED
P2B-D	4	A24
P2B-E	5	A25
P2B-F	6	A26
P2B-G	7	A27
P2B-H	8	A28
P2B-J	9	A29
P2B-J	10	A30
P2B-K	11	A31
P2B-L	12	DGND
P2B-M	13	+5V
P2B-N	14	D16
P2B-O	15	D17
P2B-P	16	D18
P2B-Q	17	D19
P2B-R	18	D20
P2B-S	19	D21
P2B-T	20	D22
P2B-U	21	D23
P2B-V	22	DGND
P2B-W	23	D24
P2B-X	24	D25
P2B-Y	25	D26
P2B-Z	26	D27
P2B-AA	27	D28
P2B-AB	28	D29
P2B-AC	29	D30
P2B-AD	30	D31
P2B-AE	31	DGND
P2B-AF	32	+5V

P2C-A	1	DGND
P2C-B	2	
P2C-C	3	
P2C-D	4	
P2C-E	5	
P2C-F	6	
P2C-G	7	
P2C-H	8	
P2C-I	9	
P2C-J	10	
P2C-K	11	
P2C-L	12	
P2C-M	13	
P2C-N	14	
P2C-O	15	
P2C-P	16	
P2C-Q	17	
P2C-R	18	
P2C-S	19	
P2C-T	20	AGND
P2C-U	21	
P2C-V	22	
P2C-W	23	
P2C-X	24	
P2C-Y	25	
P2C-Z	26	
P2C-AA	27	
P2C-AB	28	
P2C-AC	29	
P2C-AD	30	
P2C-AE	31	
P2C-AF	32	

P3-A	1	AGND
P3-B	2	PERMIT8
P3-C	3	PERMIT7
P3-D	4	PERMIT6
P3-E	5	PERMIT5
P3-F	6	PERMIT4
P3-G	7	PERMIT3
P3-H	8	PERMIT2
P3-J	9	PERMIT1
P3-J	10	Y_INTLOC
P3-K	11	B_INTLOC
P3-L	12	DMP_LEVL
P3-M	13	

JP4 1 2 AGND

JP3 1 2 DGND

P3-N	14	AGND
P3-O	15	
P3-P	16	
P3-Q	17	
P3-R	18	
P3-S	19	
P3-T	20	
P3-U	21	
P3-V	22	
P3-W	23	
P3-X	24	
P3-Y	25	

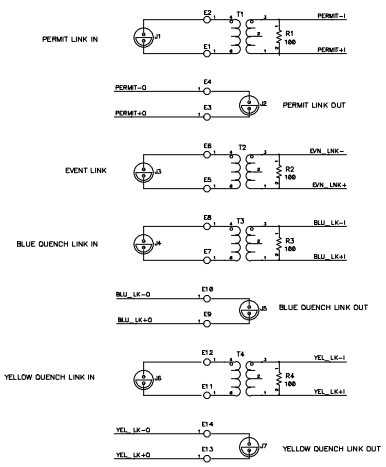

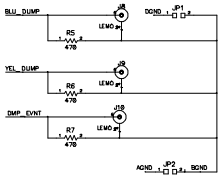

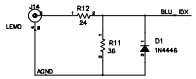

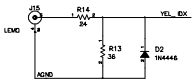

NOTES: UNLESS OTHERWISE SPECIFIED

1 ALL RESISTORS ARE IN OHMS,1/4W,+/-2%

-3	-2	-1	REFDESIGNATOR	ITEM NO.	DESCRIPTION	MATL/DWG NO./INL NO.
QTY REQD						

OUTSTANDING ECN NUMBERS

INTERPRET IN GENERAL ACCORDANCE WITH ANSI Y14.24M-1989

RHIC

M JACOBELLIS	4-26-96	
D MULLALY	4-26-96	
R CONKLING	4-26-96	
R CONKLING	4-26-96	
B CERTER	4-26-96	
S.PASSARELLO	4-26-96	

BROOKHAVEN NATIONAL LABORATORY
UPTON, N.Y. 11973

SCHEMATIC DIAGRAM
T120 RHIC PERMIT
TRANSITION MODULE

NOT ASSEMBLY

94028202

A-3

E 94028200 B

2:1 1

DWG NO. 94028200 B 1 OF 1