REV	OF SHT		DWG NO

REVISIONS

REV	ZONE	ECN NO.	DESCRIPTION	BY	DATE	CKR	APP

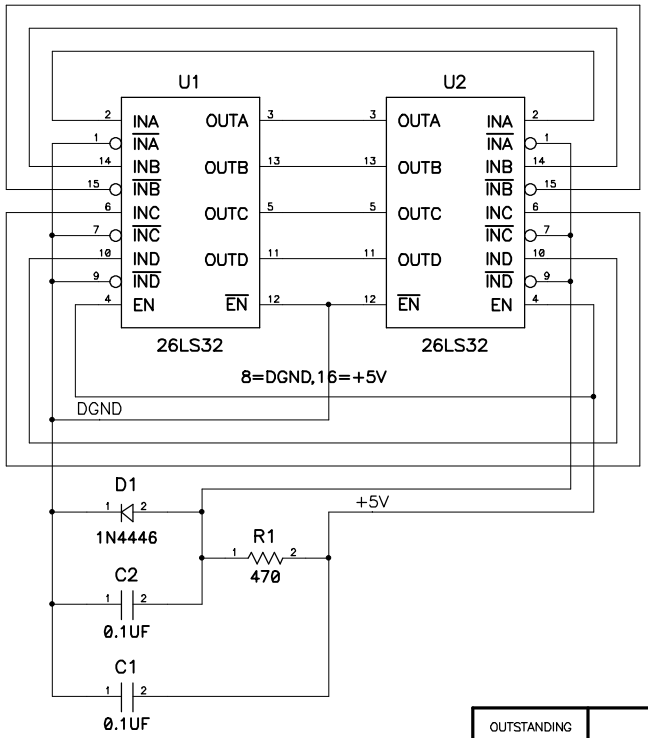

NOTES: UNLESS OTHERWISE SPECIFIED

1. ALL RESISTORS ARE IN OHMS,1/4W,+/−2%.
2. ALL CAPACITOR VALUES ARE IN MICROFARADS,10%.

OUTSTANDING ECN NUMBERS	INTERPRET IN GENERAL ACCORDANCE WITH ASME Y14.24M−1989	RHIC			BROOKHAVEN NATIONAL LABORATORY ASSOCIATED UNIVERSITIES, INC. UPTON, N.Y. 11973
	UNLESS OTHERWISE SPECIFIED	DRAWN BY	C. R. CONKLING	8/14/96	TITLE: V120 PERMIT SYSTEM MODULE CARRIER DAUGHTER BOARD
	DIMENSIONS ARE IN INCHES DECIMAL TOLERANCES .X .06 .XX .02 .XXX .005 ANGULAR TOLERANCE ±1°	DESIGN APPROVAL	D.MULLALY	8/14/96	
		CHECKED BY	C. R. CONKLING	8/14/96	
		ENGINEER APPROVAL	C. R. CONKLING	8/14/96	SIZE B / DRAWING NUMBER: 94028242 / REV. A
	Q.A. A3 / NEXT ASSEMBLY 94028244	SUPERVISOR APPROVAL	B.OERTER	8/14/96	
		Q.A. APPROVAL	PASSARELLO	8/14/96	SCALE: / WEIGHT: / SHEET 1 OF 1