LARP Instrumentation Commissioning Strategy

LARP Collaboration Meeting

16-18 September, 2003

John Byrd

LARP Instrumentation Group

- BNL
  - Peter Cameron
  - Angelika Drees
- FNAL
  - Cheng-Yang Tan
  - John Marriner
- LBNL
  - John Byrd
  - Bill Turner
  - Peter Denes
  - Massimo Placidi
  - Alex Ratti
  - Stefano De Santis
  - Jean-Francois Beche
  - Jim Greer
- CERN
  - Hermann Schmickler
  - Enrico Bravin
  - Steve Hutchins
  - Maria Elena Angoletta
  - Alan Burns
  - Rhodri Jones
  - Fritz Caspers
  - Jean-Pierre Koutchouk
  - Frederick Bordry

QuickTime™ and a TIFF (Uncompressed) decompressor are needed to see this picture.

LARP Beam Instrumentation and Diagnostic Techniques

LARP will help the LHC in 3 key areas:

- *Bring LHC to full energy*

  Betatron tune, coupling, and chromaticity control during ramp

- *Bring LHC to design luminosity*

  Real-time luminosity monitor

- *LHC machine protection*

  Longitudinal density monitors

These contributions advance the state-of-the-art in beam instrumentation and have direct contributions to present and future US accelerator projects.

Also planning for R&D on additional instrumentation

Tune Control

- Challenge: persistent current effects in SC magnets can strongly perturb machine lattice, especially during energy ramp (aka "snapback"). Effects for LHC predicted to be large.
  - Betatron tunes ($Q_{x,y}$) and chromaticities ($Q'_{x,y}=EdQ_{x,y}/dE$) can vary significantly due to "snapback" resulting in beam loss, emittance growth.

Tolerances on the beam parameters

[BI Specification Team LHC-BSRL-ES-0001]

- dQ =< (Qx-Qy)/10 ⇒ .003 at injection
  .001 in collision
- dQ' =< ±1 at injection (transverse stability)
  ± 3 at 7 TeV (contribution to tune spread)

Expected time scales for variations (worst cases)

[BI Specification Team LHC-BSRL-ES-0001]

- Snap-back: dQ <= 0.0008 per second over up to 60 seconds
  dQ'<= 2.7 per second over up to 60 seconds

Feedback *probably* required on both tune and chromaticity (see *Day N*).

Effects of persistent currents in RHIC

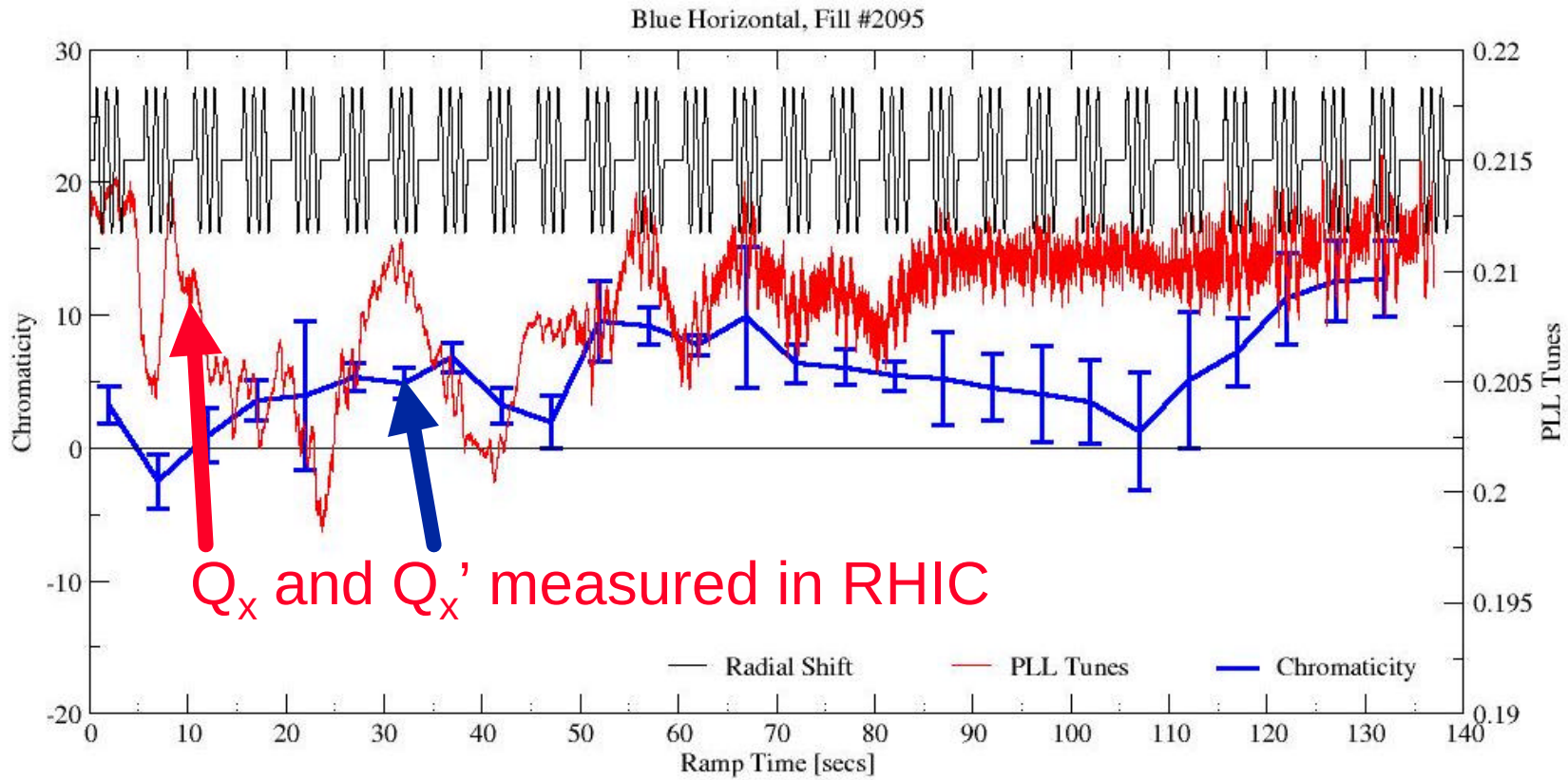

Q_x and Q_x' measured in RHIC

Energy increasing

Beam Transfer Function

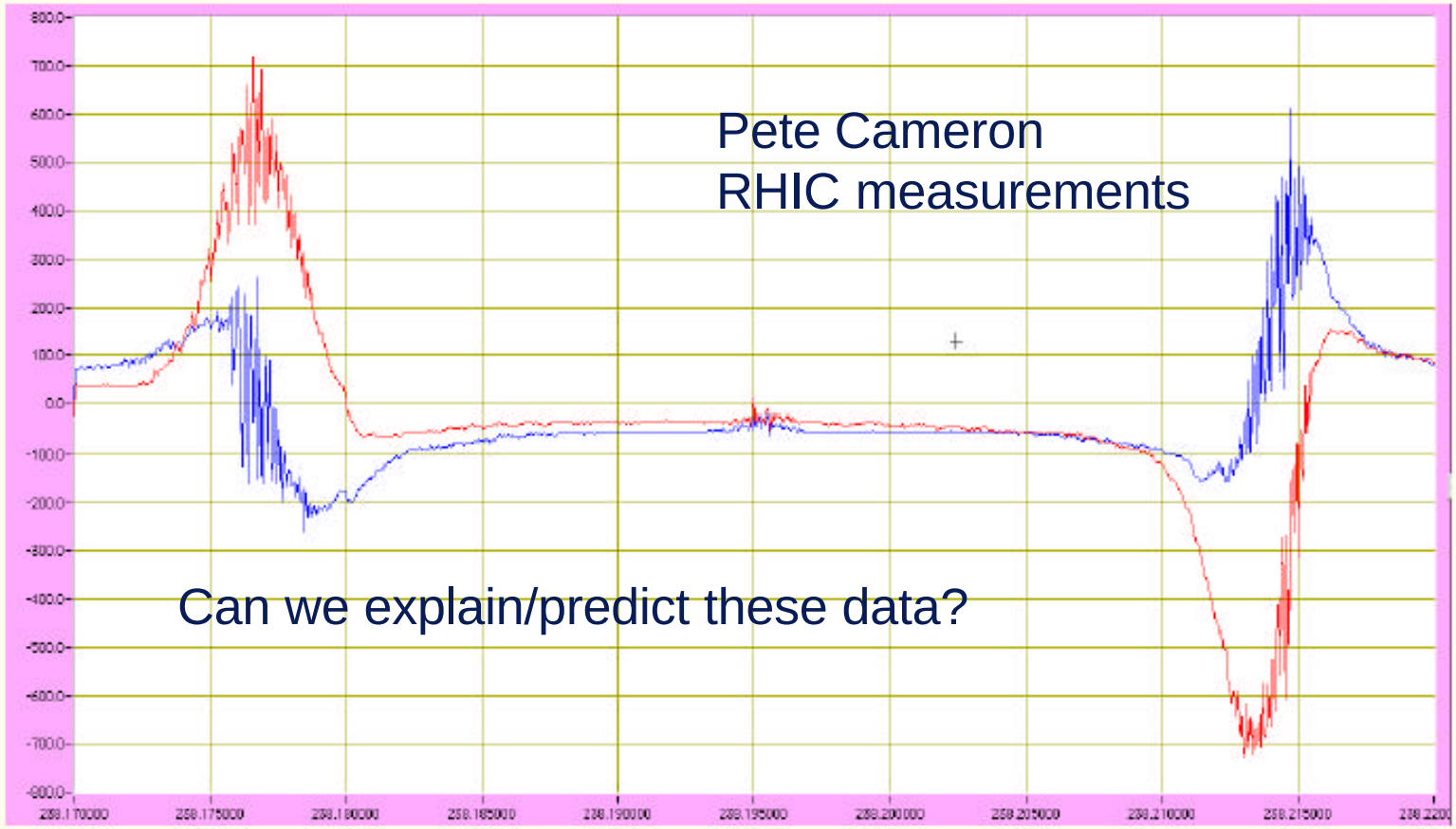

Pete Cameron
RHIC measurements

Can we explain/predict these data?

FNAL LARP Workshop 6/9/2003 5

Tune Control Status

- RHIC/CERN collaboration established
- Workshop held at Fermilab in May 03
- Discussions on choice of tune pickup in progress
- Coordinate LARP efforts with ongoing work at RHIC and Tevatron.

High Bandwidth Luminosity Monitor

Instrument US-built TAN absorbers to measure and optimize the luminosity of colliding bunch pairs with 40 MHz resolution

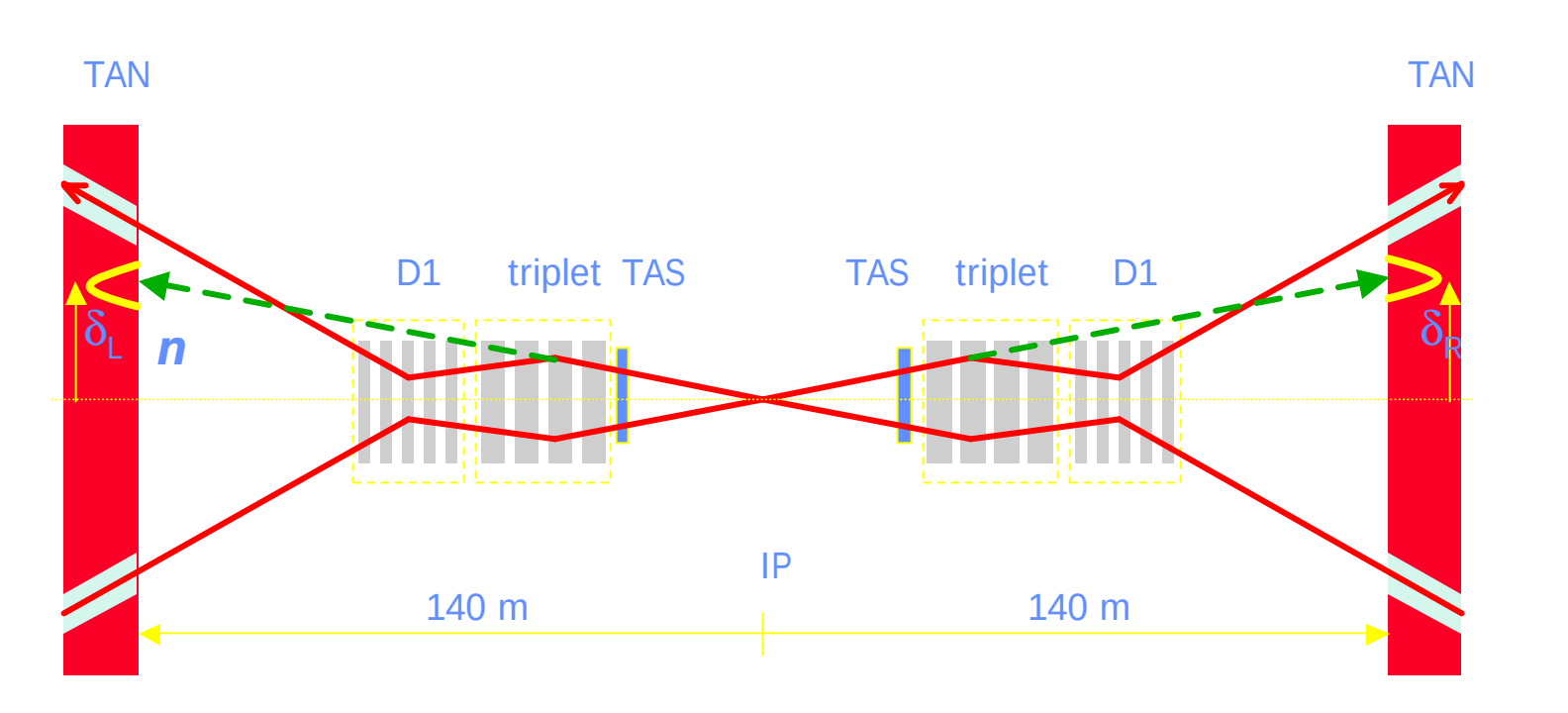

LHC Luminosity Measurement

The challenge:

- 1% absolute precision and <0.5% relative precision as a feedback signal for luminosity optimization
- Long term stability (~1 month) for calibration with detectors
- High radiation environment (100 MGy/year)
- Bunch-by-bunch capability (25 nsec separation)

The solution:

- Segmented, multi-gap, pressurized ArN_2 gas ionization chamber constructed of rad hard materials
- CERN group is developing CdTe technology in parallel.

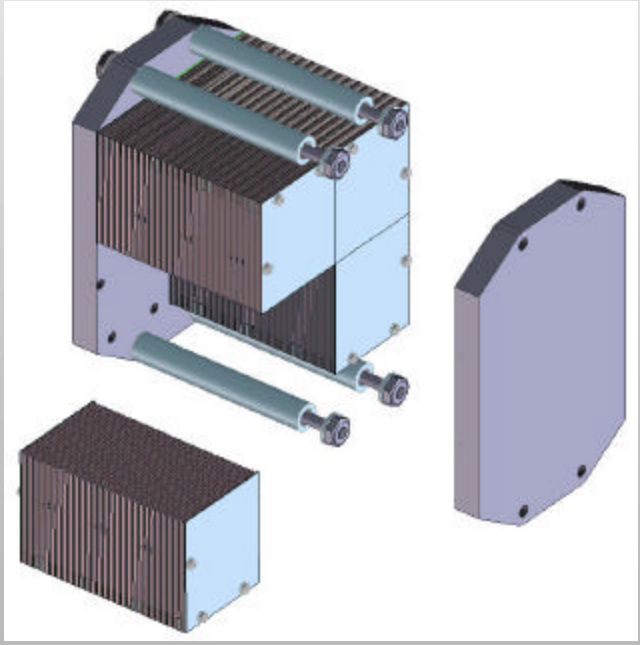

Luminometer details

- Segmented, multi-gap, pressurized gas ionization chamber constructed of rad hard materials
- 3-11 atmospheres Ar + 2%N_2 gas mixture, e^- drift velocity 3.2 cm/μs
- Low noise bi-polar transistor pre-amplifier "cold" cable termination, ENC_δ ~ 1,824 e^-
- Pulse shaper, τ = 2.5 ns
- 3 m radiation hard cable between ionization chamber and front end electronics, radiation dose to electronics < 100 MGy/oper yr
- S/N ~ 5 for single pp interaction

QuickTime™ and a TIFF (Uncompressed) decompressor are needed to see this picture.

Instrumented TAN absorber

Instrument a
Copper Bar

IP

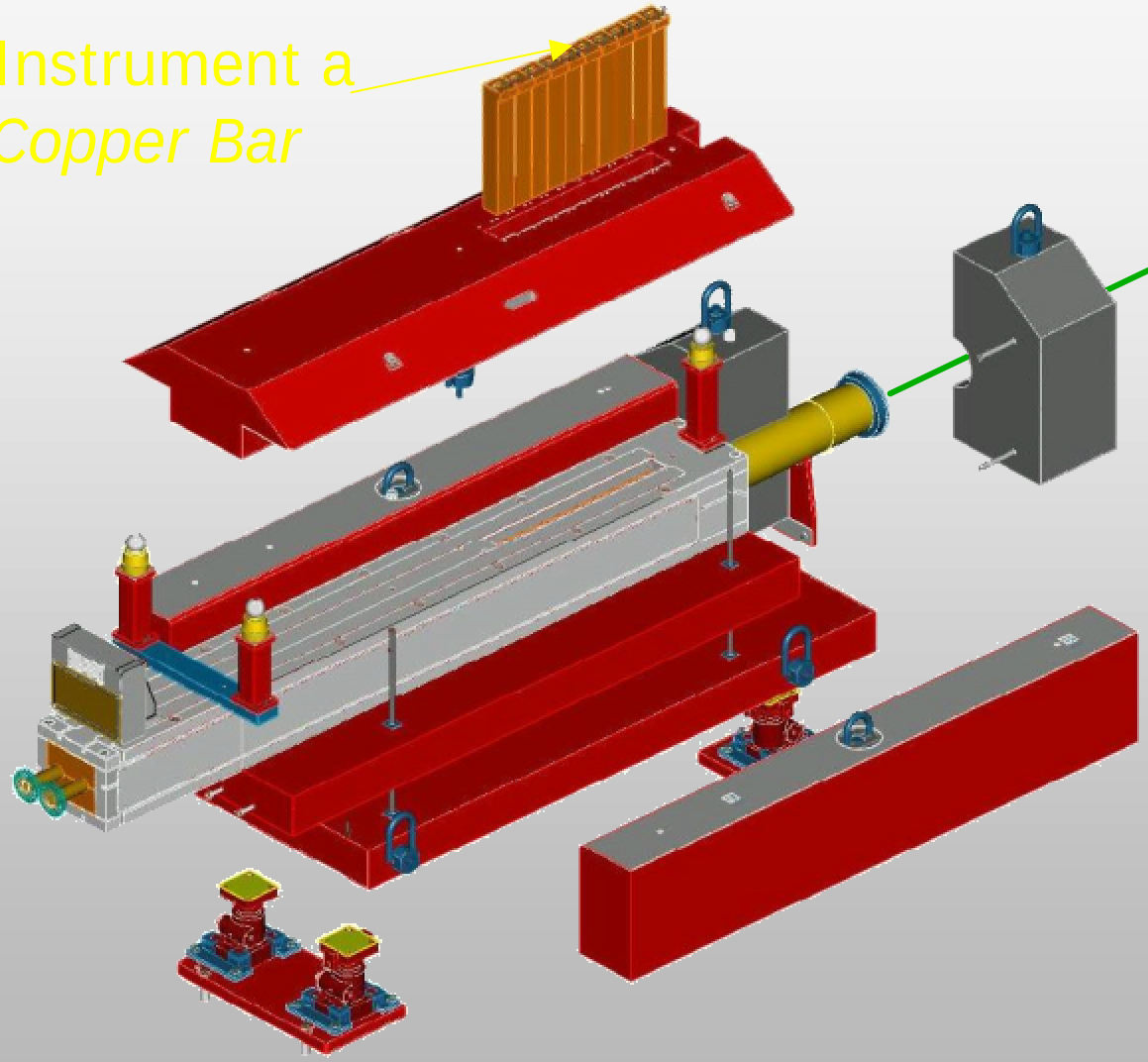

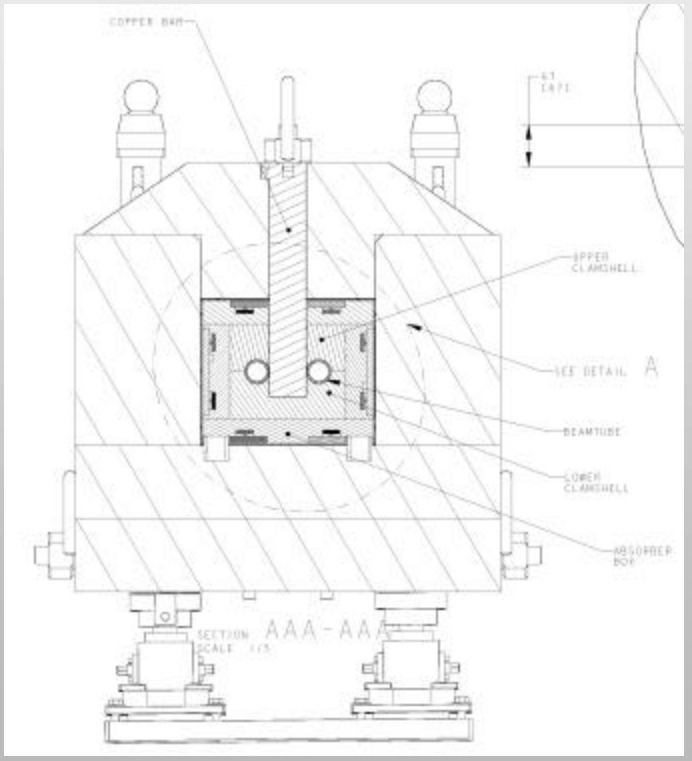

Bunch-to-bunch Luminosity Measurement

- Peaking time is less than the 25 ns bunch spacing
- Pulse train obtained by superposition of single pulses

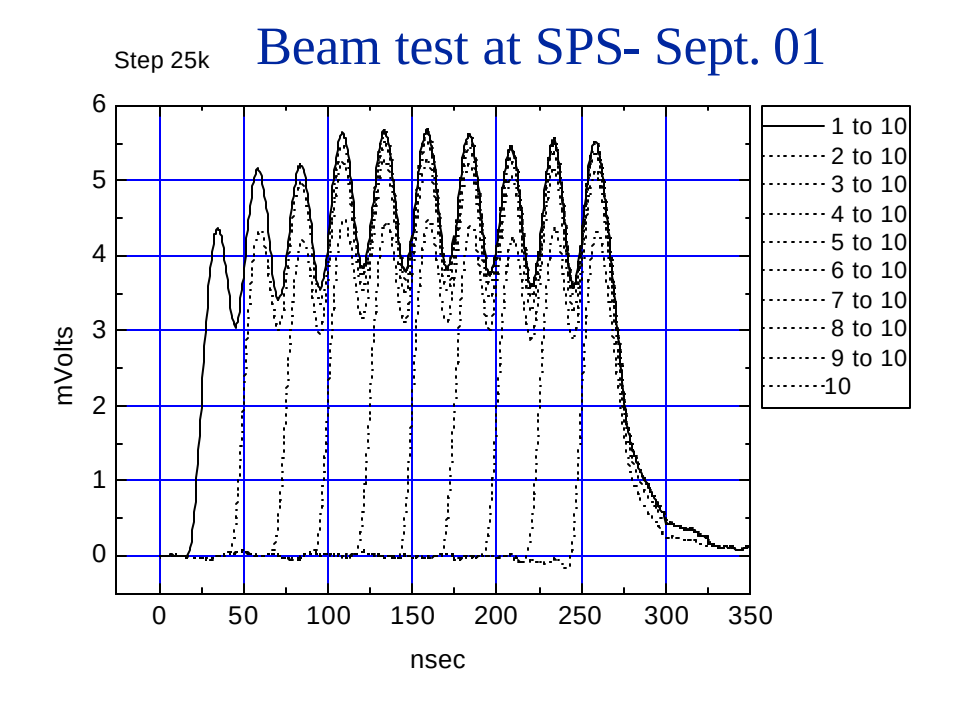

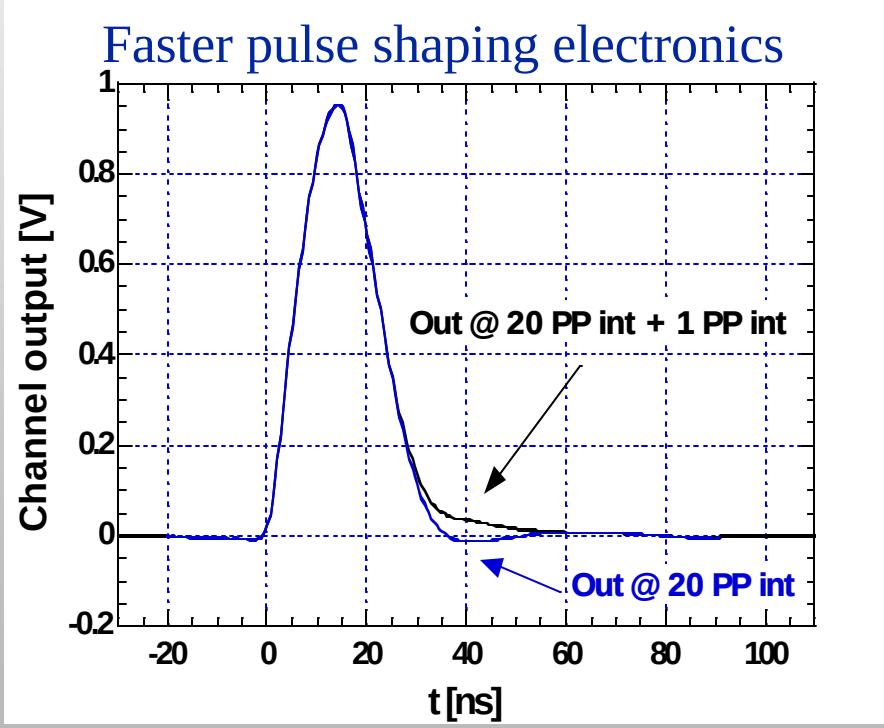

LUMI Status

- Second prototype built
- Beam tests underway at ALS (Ar-N_2 and CdTe).

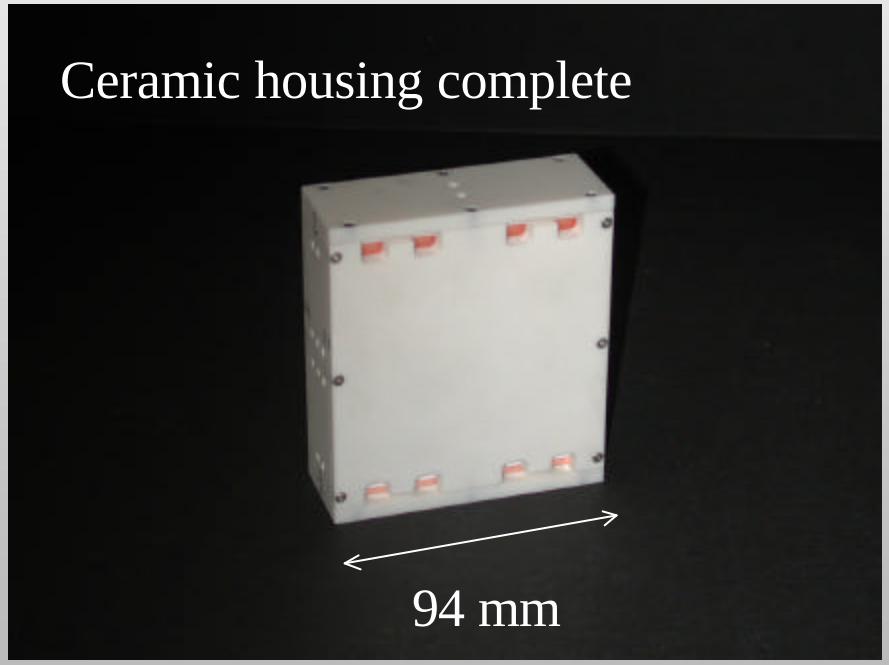

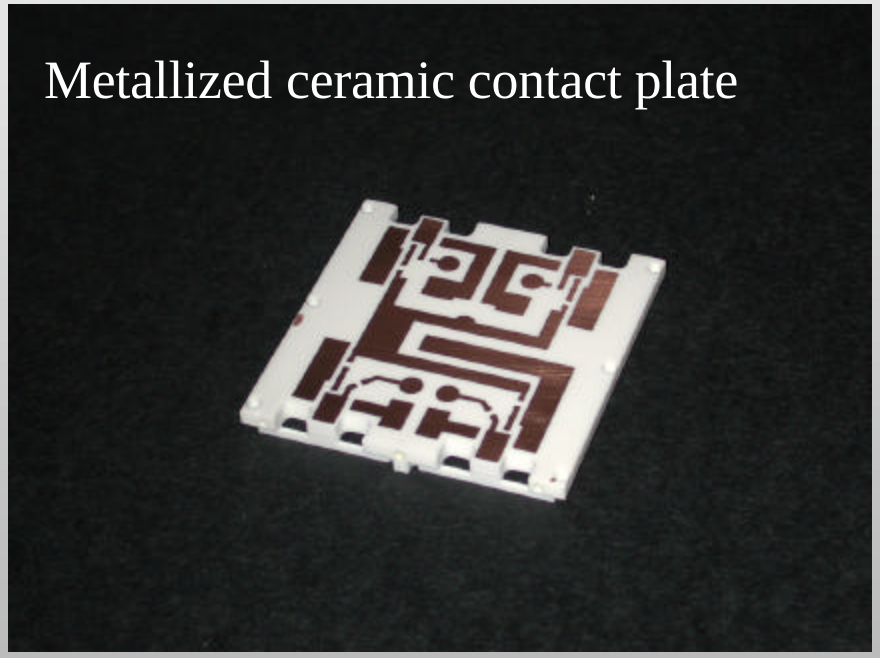

Use LUMI to help measure Xing angle

The right-left asymmetry ratio is a sensitive function of the crossing angle

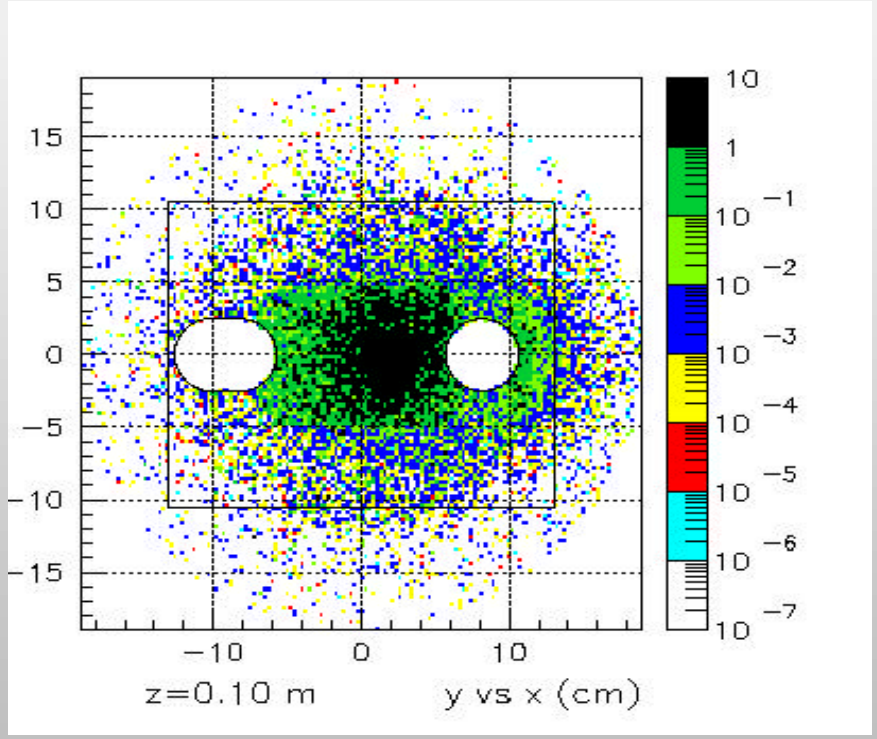

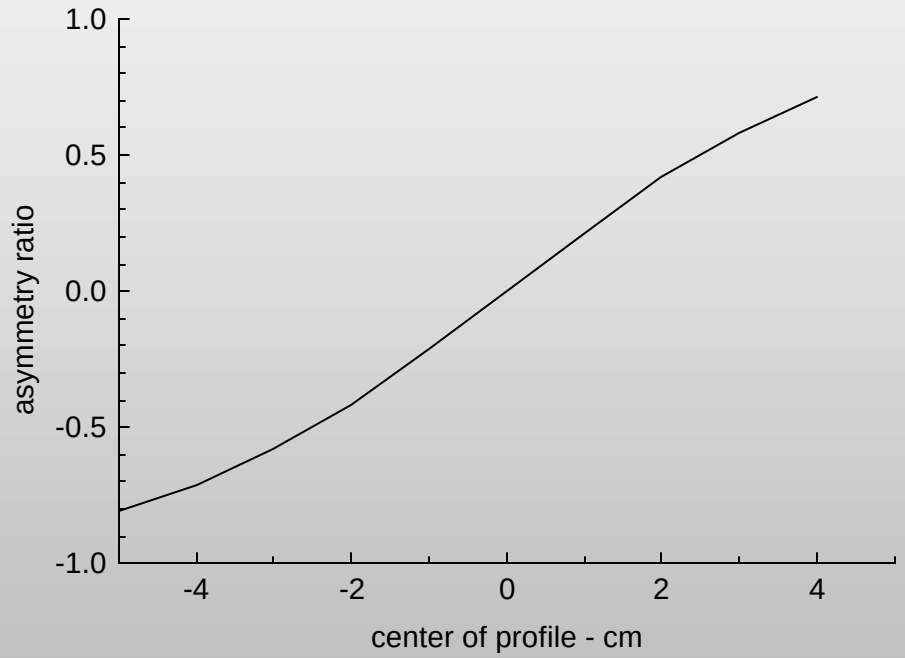

– Measurement of the asymmetry ratios at the positions of theTAN on both sides of an IP will help determination of IP pos. and xing angle

LHC Longitudinal Charge Density

LHC beam carries 350 MJ. Beam loss in magnets can cause severe damage.

- Machine protection issues for study include:
  - Debunched beam at injection
  - Population in abort gap
  - Ghost bunches
  - Bunch core and tails
- Requirements:
  - 10^4 dynamic range
  - 20 samples/bunch giving $\pm 2\sigma$ (1120 psec). Corresponds to 50 psec sampling resolution.
  - Do this for all buckets (h=35640!). Drives overall sampling rate.

The LDM will also be an invaluable tool for beam dynamics studies in LHC.

QuickTime™ and a TIFF (Uncompressed) decompressor are needed to see this picture.

LHC Longitudinal Charge Density Specs

Function	Beam energy TeV	Nominal peak density*, p/ps	Resolution, p/ps	Integration time
Debunched beam	0.45	1.0×10^8	2×10^4	~10 sec
Abort gap population	7.0	2.0×10^8	60	~ 100 ms
Ghost bunches	7.0	2.0×10^8	2×10^4	~ 10 sec
Tails	7.0	2.0×10^8	$2 \pm 1 \times 10^4$	~ 10 sec
Bunch core	7.0	2.0×10^8	$2 \pm 1 \times 10^6$	~ 1 msec

* $N_b = 10^{11}$

Requirements (from. C. Fischer, LHC-BSRL-ES-0005.00 rev 2.0, 07 Jan 03)

Solution: Optical Sampling Technology

- Use nonlinear mixing of synchrotron radiation with a short laser pulse to sample the longitudinal bunch profile

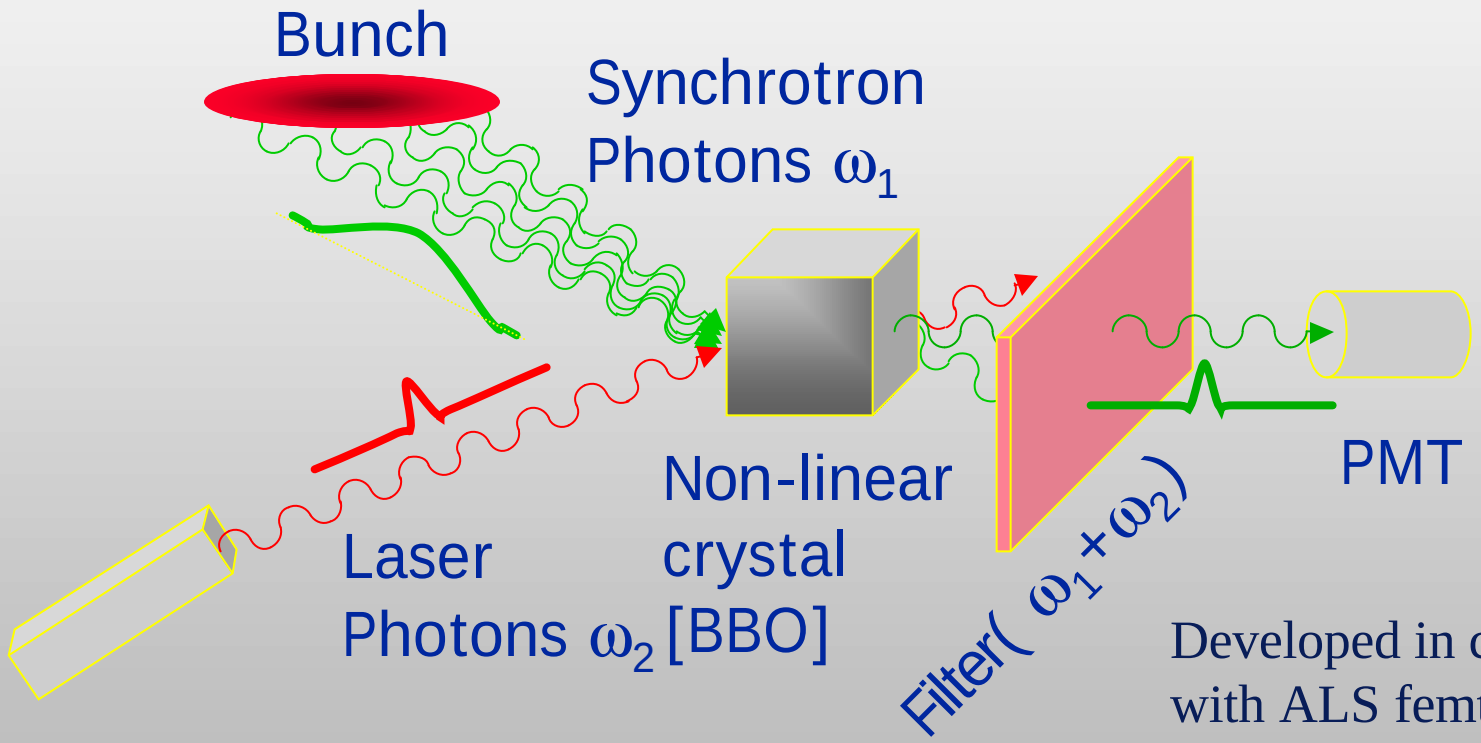

Developed in collaboration with ALS femtoslicing program.

Longitudinal Density Monitor

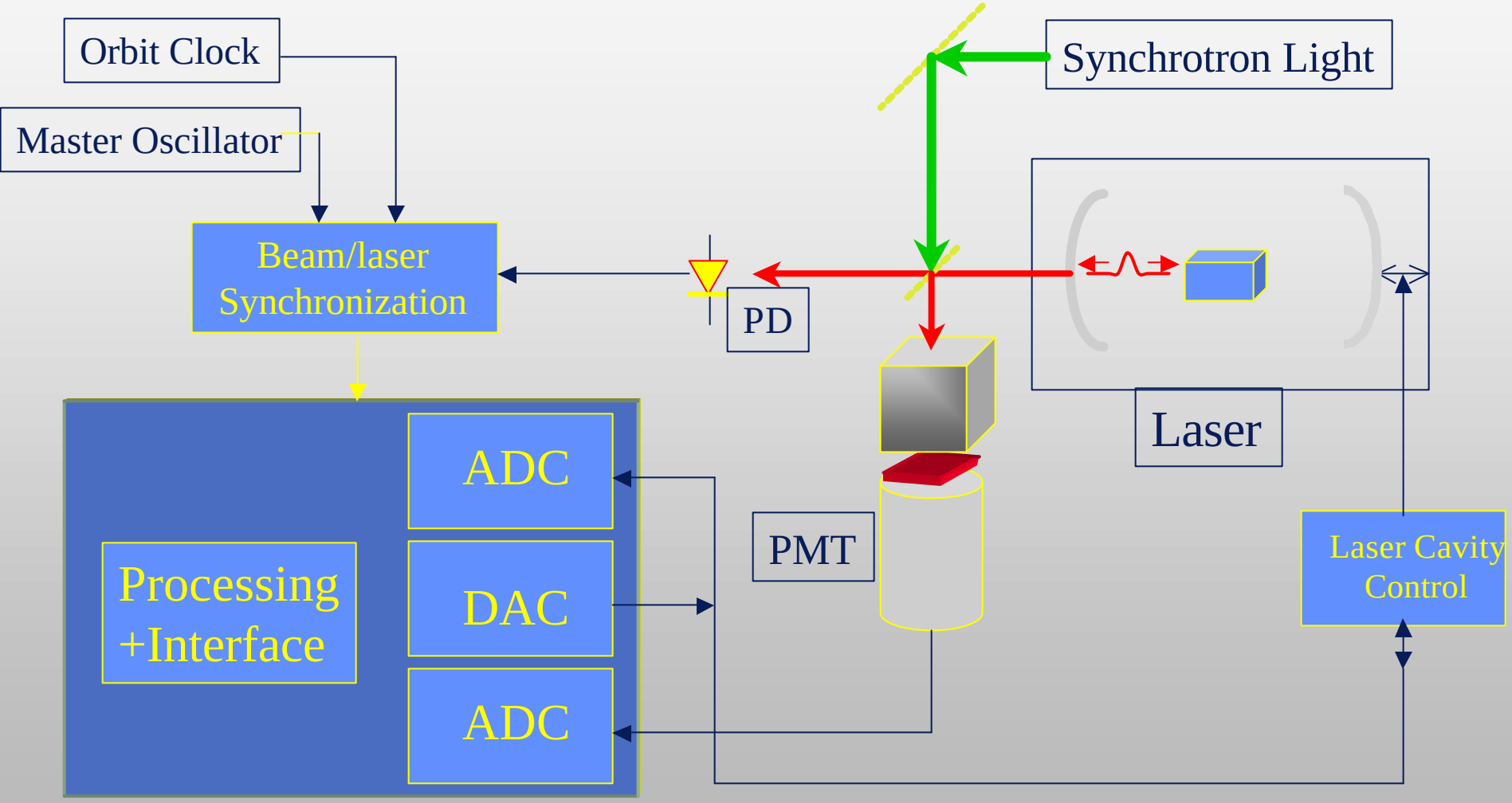

LDM Status

- Continuing studies on ALS.
- Integrate experimental setup as an “instrument”
  - Identify appropriate laser for LHC
  - Combine all optics into laser housing
- Coordinate with CERN for use with synchrotron sources
- Coordinate instrument interface with LHC commissioning and operations

Longitudinal diffusion with losses

Trapped orbits

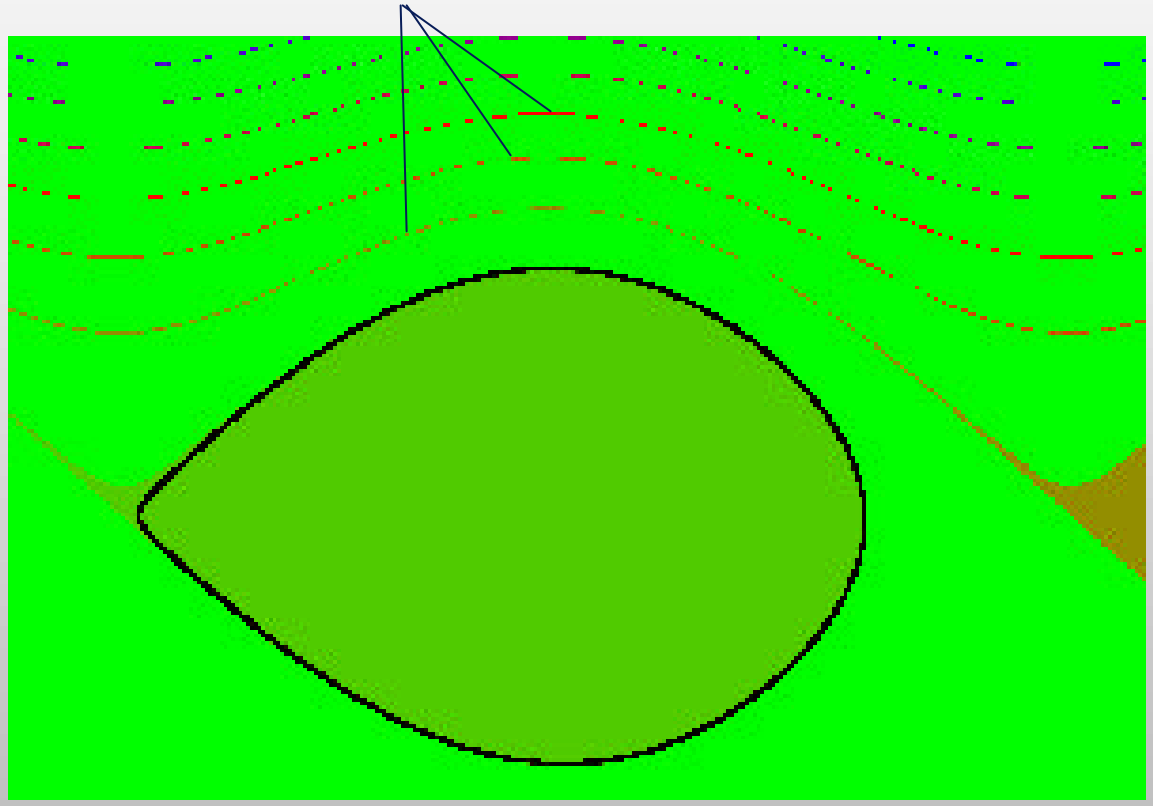

With SR losses, RF buckets do not have closed separatrices. This allows diffusion from filled to empty buckets.

This topic critical for LHC operation:

- Beam abort gap filling
- Intrabunch ghost bunches

The LDM provides a means of studying these effects.

Exaggerated case for LHC.

Additional instrumentation/techniques

- Beam/Beam studies
  - AC dipole for reactive excitation of beam
  - beam-beam compensation with electron lens or wire
- Electron Cloud
  - In situ low energy electron spectrometer
- Please offer suggestions!

These will be added to the LARP program as need and funding permit.

Summary

LARP Instrumentation is working on three areas/instruments:

- Bunch-bunch Luminosity measurement
- Longitudinal beam distribution
- Tune measurement and control

We have progress in all three areas but we need to keep pushing hard.

These instruments give us leverage for exploring specific LHC accelerator physics issues:

- Luminosity optimization
  - Beam-beam dithering
  - Relative crossing angle measurement
- Beam loss mechanisms:
  - Beam diffusion into tails
  - Diffusion into “ghost” bunches
- Precision tune measurements will enable numerous studies
  - Single/multi bunch collective effects
  - electron cloud studies
  - Beam-beam compensation schemes

QuickTime™ and a TIFF (Uncompressed) decompressor are needed to see this picture.