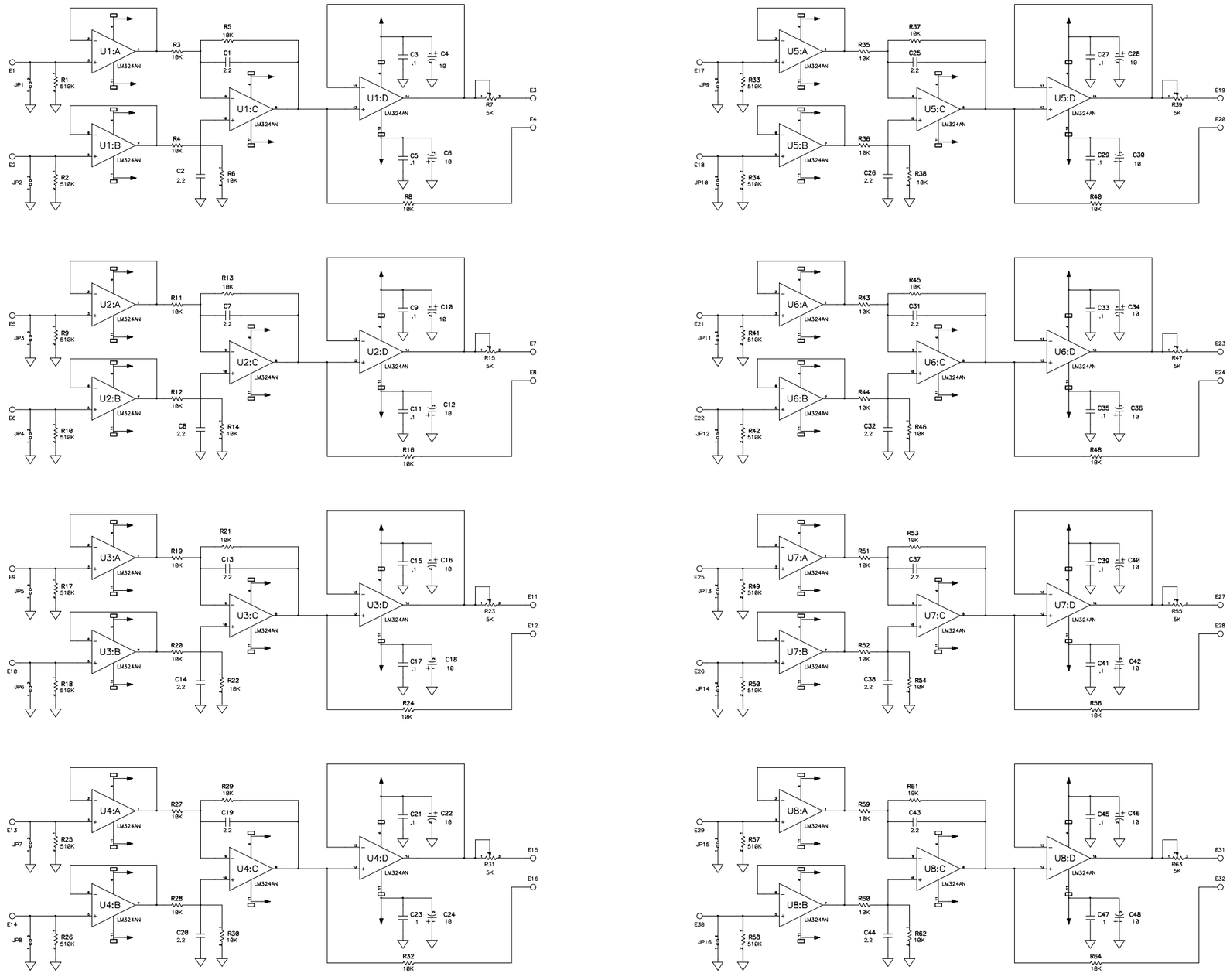

NOTES: UNLESS OTHERWISE SPECIFIED

1. ALL RESISTORS ARE IN OHMS,1/4W,+/-2%.
2. ALL CAPACITOR VALUES ARE IN MICROFARADS,10%.

REVISIONS							
REV	ZONE	ECN NO.	DESCRIPTION	BY	DATE	CKR	APP

-3	-2	-1	REF.DESIGNATOR	ITEM NO.	DESCRIPTION	MATL/DWG NO.,BNL NO.
QTY REQD						

OUTSTANDING ECN NUMBERS

INTERPRET IN GENERAL ACCORDANCE WITH ASME Y14.24M-1989

UNLESS OTHERWISE SPECIFIED

DIMENSIONS ARE IN INCHES
DECIMAL TOLERANCES
X ±0
XX ±0
XXX ±005
ANGULAR TOLERANCE ±1°

Q.A. NEXT ASSEMBLY

RHIC

DRAWN BY		
DESIGN APPROVAL	D.MULLALY	
CHECKED BY	S.KWATKOWSKI	
ENGINEER APPROVAL	S.KWATKOWSKI	
SUPERVISOR APPROVAL		
Q.A. APPROVAL		

BROOKHAVEN NATIONAL LABORATORY
ASSOCIATED UNIVERSITIES, INC.
UPTON, N.Y. 11973

TITLE

SIZE E | DRAWING NUMBER: | REV.

SCALE | WEIGHT | SHEET OF

ON DWG