REVISIONS							
REV	ZONE	ECN NO.	DESCRIPTION	BY	DATE	CHK	APP
C	–	–	INITIAL RELEASE	M.J.	8/27/98	T.H.	T.H.
D	–	AD802B2	SEE ECN NO. AD802B2	M.J.	10/26/98	T.H.	T.H.

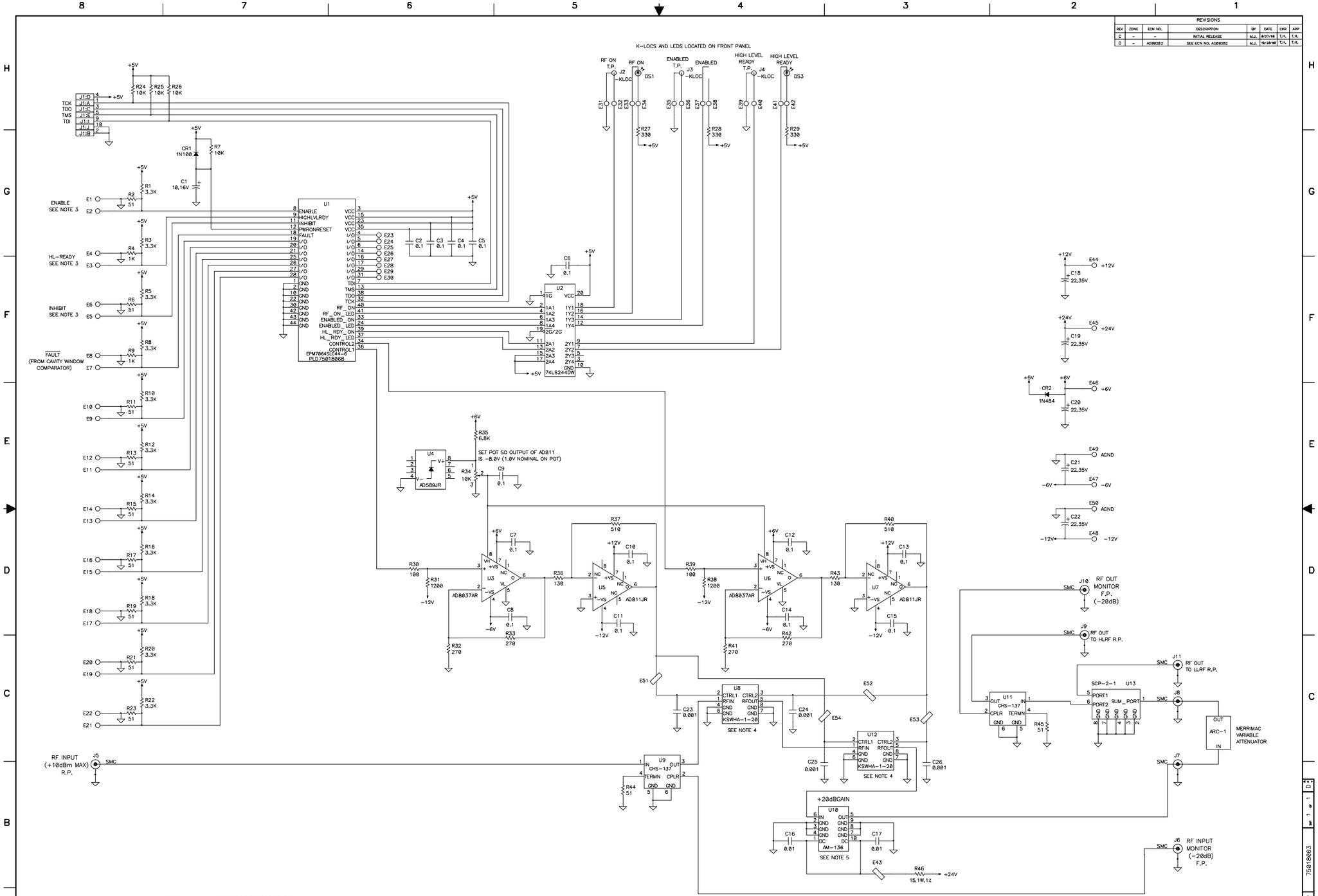

NOTES: UNLESS OTHERWISE SPECIFIED

1. ALL RESISTORS VALUE ARE IN OHMS, 1/8W, +/- 5%.
2. ALL CAPACITORS VALUE ARE IN MICRO FARADS, +/- 10%.
3. USE 3.3K OHMS PULL UPS FOR INTERFACING WITH ACS TIMING SYSTEM.
   USE 51 OHM PULL DOWNS FOR INTERFACING WITH RHIC TIMING SYSTEM.
4. SOLDER CASE TO GROUND PLANE
5. HEAT SINKING REQUIRED, WAKEFIELD ENGINEERING PART # 655-53AB
6. SMC CONNECTIONS TO BE MADE THROUGH REAR OF PANEL

-3	-2	-1	REF.DESIGNATOR	ITEM NO.	DESCRIPTION	MATL/DWG NO.,SPN. NO.
QTY REQD						

OUTSTANDING ECN NUMBERS

INTERPRET IN GENERAL ACCORDANCE WITH ASME Y14.24M-1989

UNLESS OTHERWISE SPECIFIED

DIMENSIONS ARE IN INCHES
DECIMAL TOLERANCES
X .06
XX .02
XXX .005
ANGULAR TOLERANCE ±1°

DRAWN BY	M.JACOBELLIS	3-25-98
DESIGN APPROVAL	D.MULLALY	3-31-98
CHECKED BY	T.HAYES	3-31-98
ENGINEER APPROVAL	T.HAYES	3-31-98
SUPERVISOR APPROVAL	M.BRENNAN	3-31-98
Q.A. APPROVAL	D.PASSARELLO	3-31-98

Q.A. A-3 | NEXT ASSEMBLY 75018065

RHIC

BROOKHAVEN NATIONAL LABORATORY
UPTON, N.Y. 11973

TITLE: SCHEMATIC DIAGRAM
RHIC RF BEAM CONTROL SYSTEM
POWER DISTRIBUTION AMPLIFIER

SIZE E | DRAWING NUMBER: 75018063 | REV. D

SCALE ----- | WEIGHT ----- | SHEET 1 OF 1

DWG NO 75018063 | SHT 1 | REV D