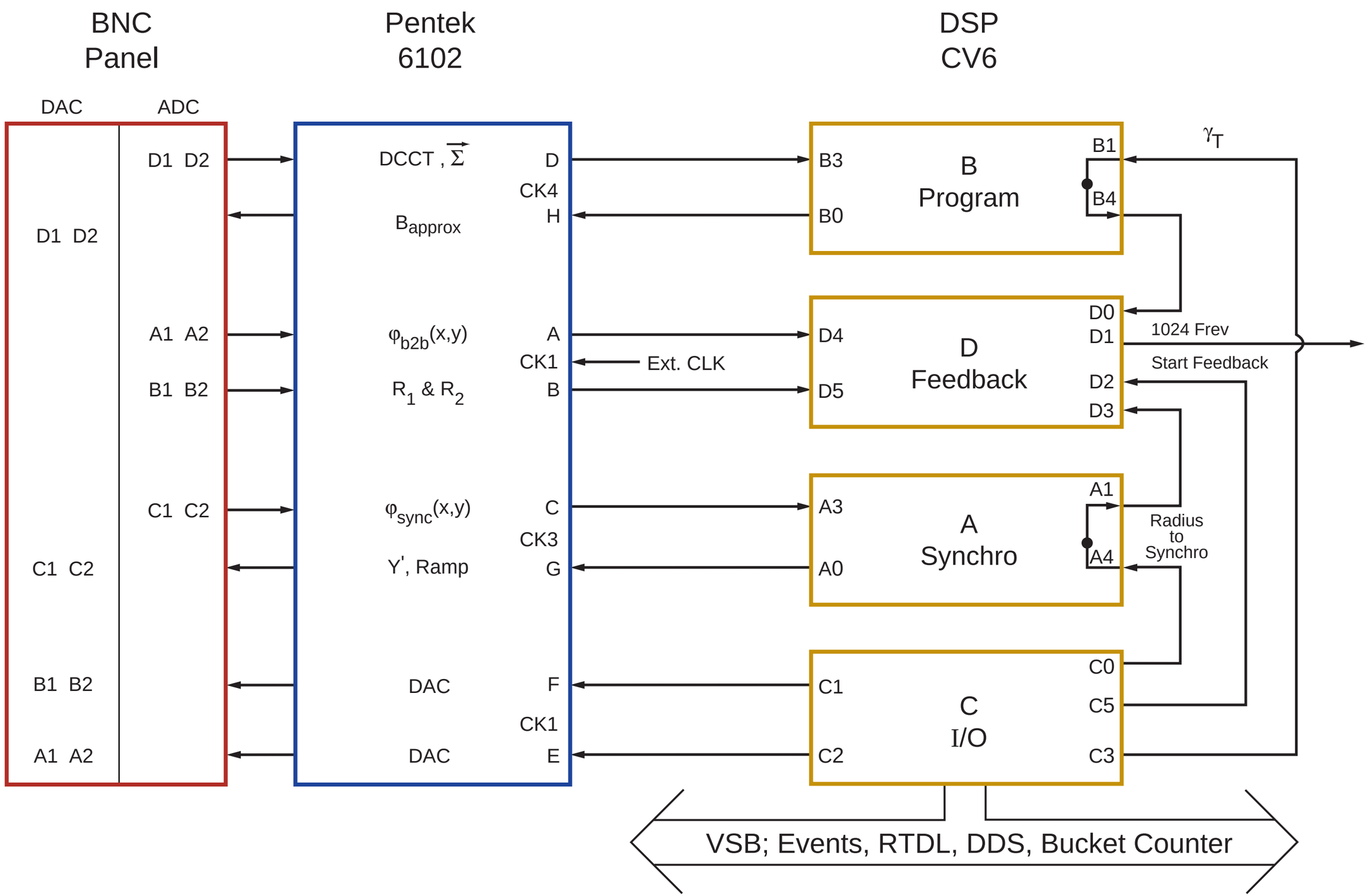

S.Ellerd/Pentek11/99