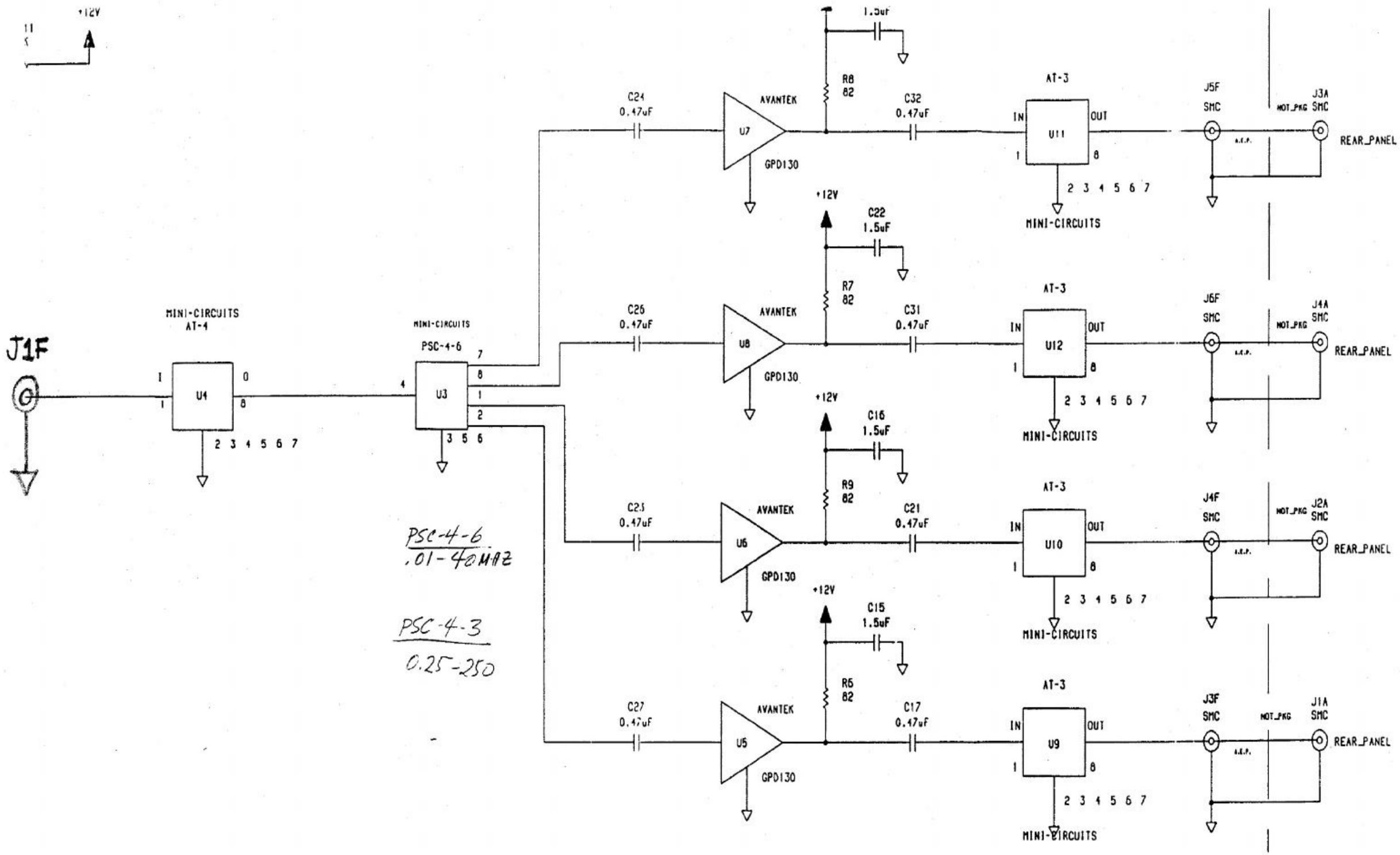
+12V
J1F
MINI-CIRCUITS
AT-4
U4
MINI-CIRCUITS
PSC-4-6
U3
PSC-4-6
.01-40MHZ
PSC-4-3
0.25-250
C24
0.47uF
C25
0.47uF
C23
0.47uF
C27
0.47uF
AVANTEK
U7
U8
U6
U5
GPD130
R8
82
R7
82
R9
82
R5
82
1.5uF
C22
1.5uF
C16
1.5uF
C15
1.5uF
C32
0.47uF
C31
0.47uF
C21
0.47uF
C17
0.47uF
AT-3
U11
U12
U10
U9
IN
OUT
MINI-CIRCUITS
J5F
J6F
J4F
J3F
SMC
J3A
J4A
J2A
J1A
NOT_PKG
REAR_PANEL