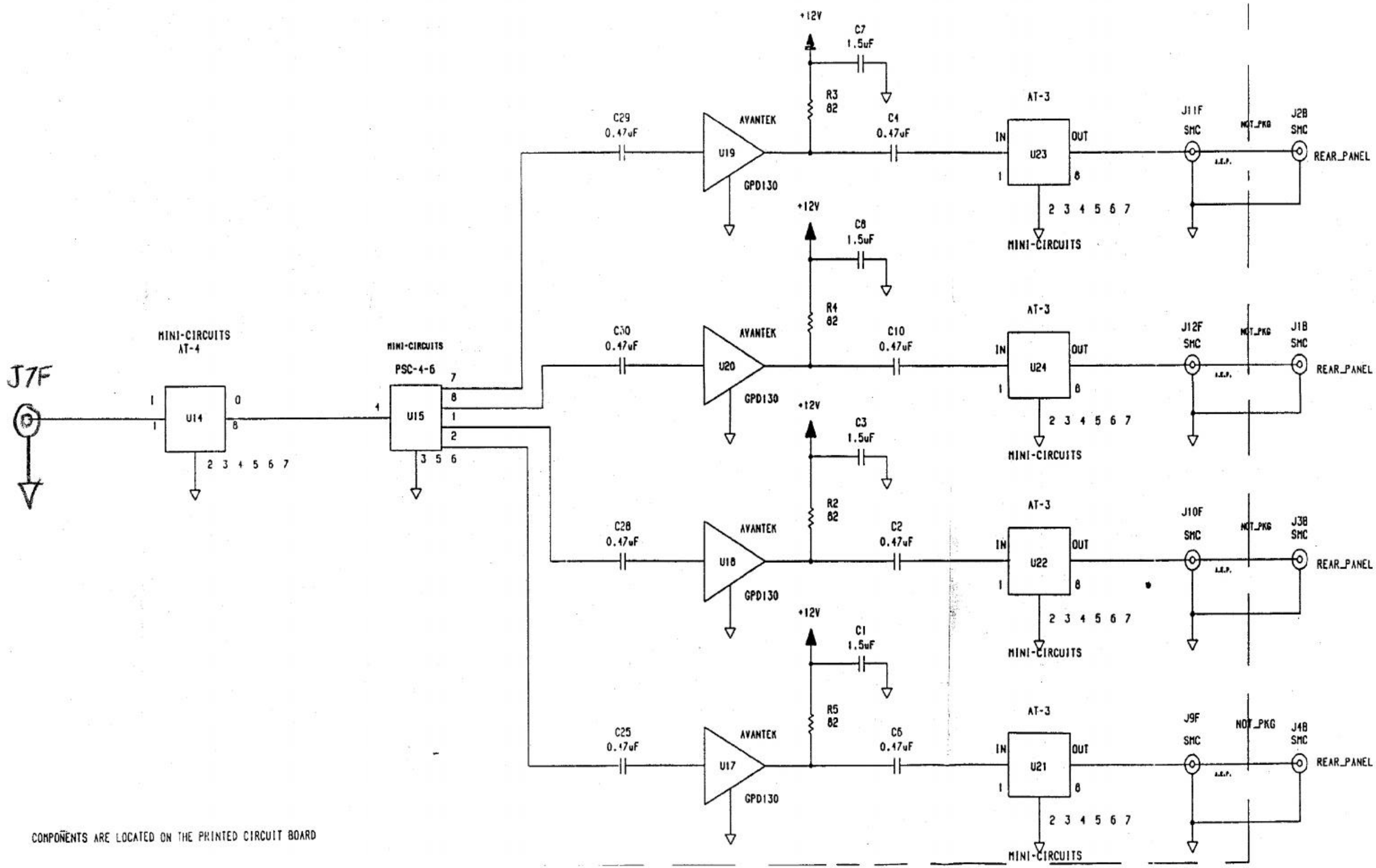


COMPONENTS ARE LOCATED ON THE PRINTED CIRCUIT BOARD