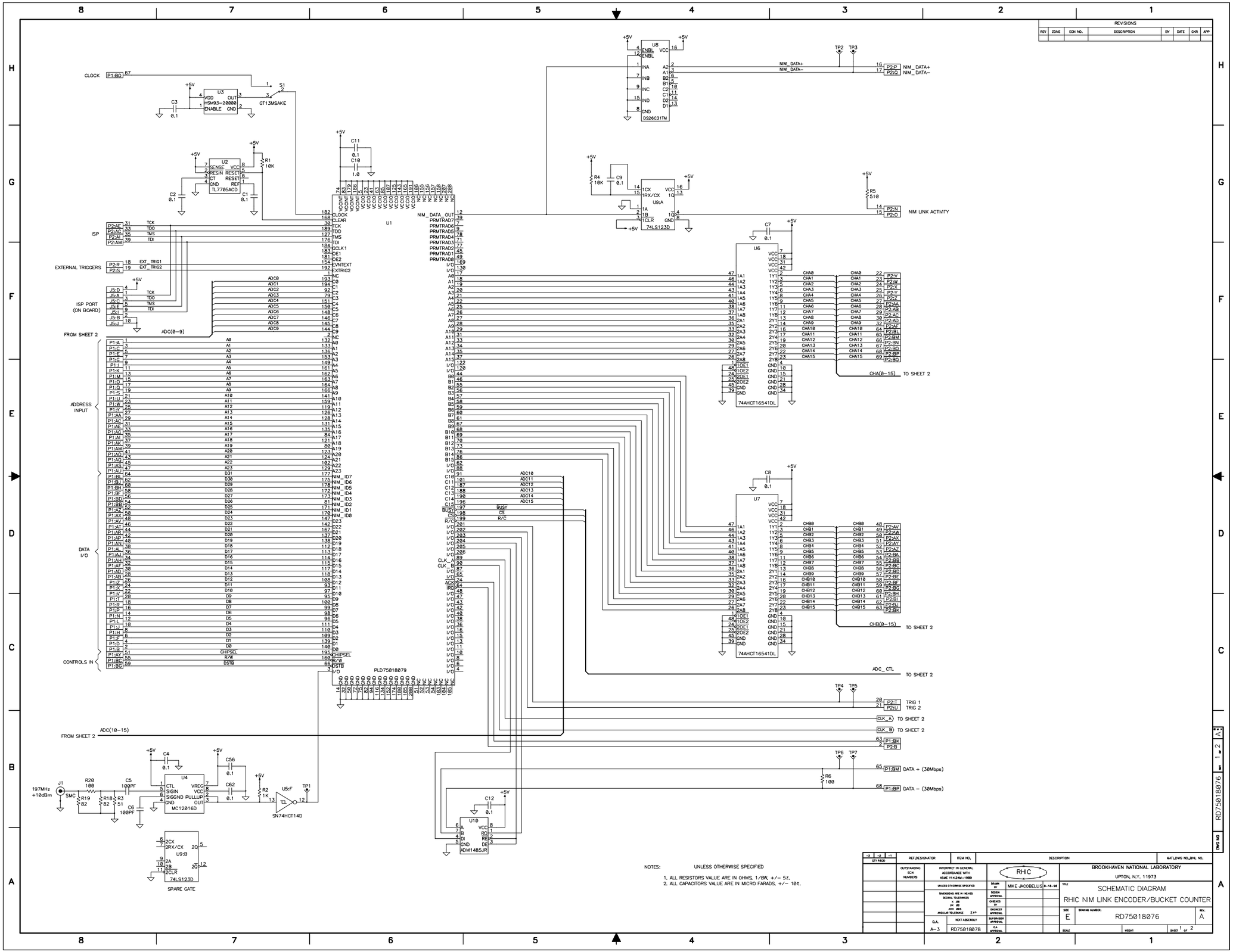

NOTES: UNLESS OTHERWISE SPECIFIED

1. ALL RESISTORS VALUE ARE IN OHMS, 1/8W, +/− 5%.
2. ALL CAPACITORS VALUE ARE IN MICRO FARADS, +/− 10%.

REVISIONS							
REV	ZONE	ECN NO.	DESCRIPTION	BY	DATE	CKR	APP

QTY REQD	REF.DESIGNATOR	ITEM NO.	DESCRIPTION	MATL.DWG NO.,BNL NO.

OUTSTANDING ECN NUMBERS

INTERPRET IN GENERAL ACCORDANCE WITH ASME Y14.24M-1989

UNLESS OTHERWISE SPECIFIED DIMENSIONS ARE IN INCHES DECIMAL TOLERANCES .X ±.05 .XX ±.02 .XXX ±.005 ANGULAR TOLERANCE ±1°

Q.A. A-3 NEXT ASSEMBLY RD75018078

RHIC

DRAWN BY MIKE JACOBELUS 8-18-98

DESIGN APPROVAL

CHECKED BY

ENGINEER APPROVAL

SUPERVISOR APPROVAL

Q.A. APPROVAL

BROOKHAVEN NATIONAL LABORATORY
UPTON, N.Y. 11973

TITLE SCHEMATIC DIAGRAM
RHIC NIM LINK ENCODER/BUCKET COUNTER

SIZE E DRAWING NUMBER: RD75018076 REV. A

SCALE WEIGHT SHEET 1 OF 2

DWG NO RD75018076 SHT 1 OF 2 A

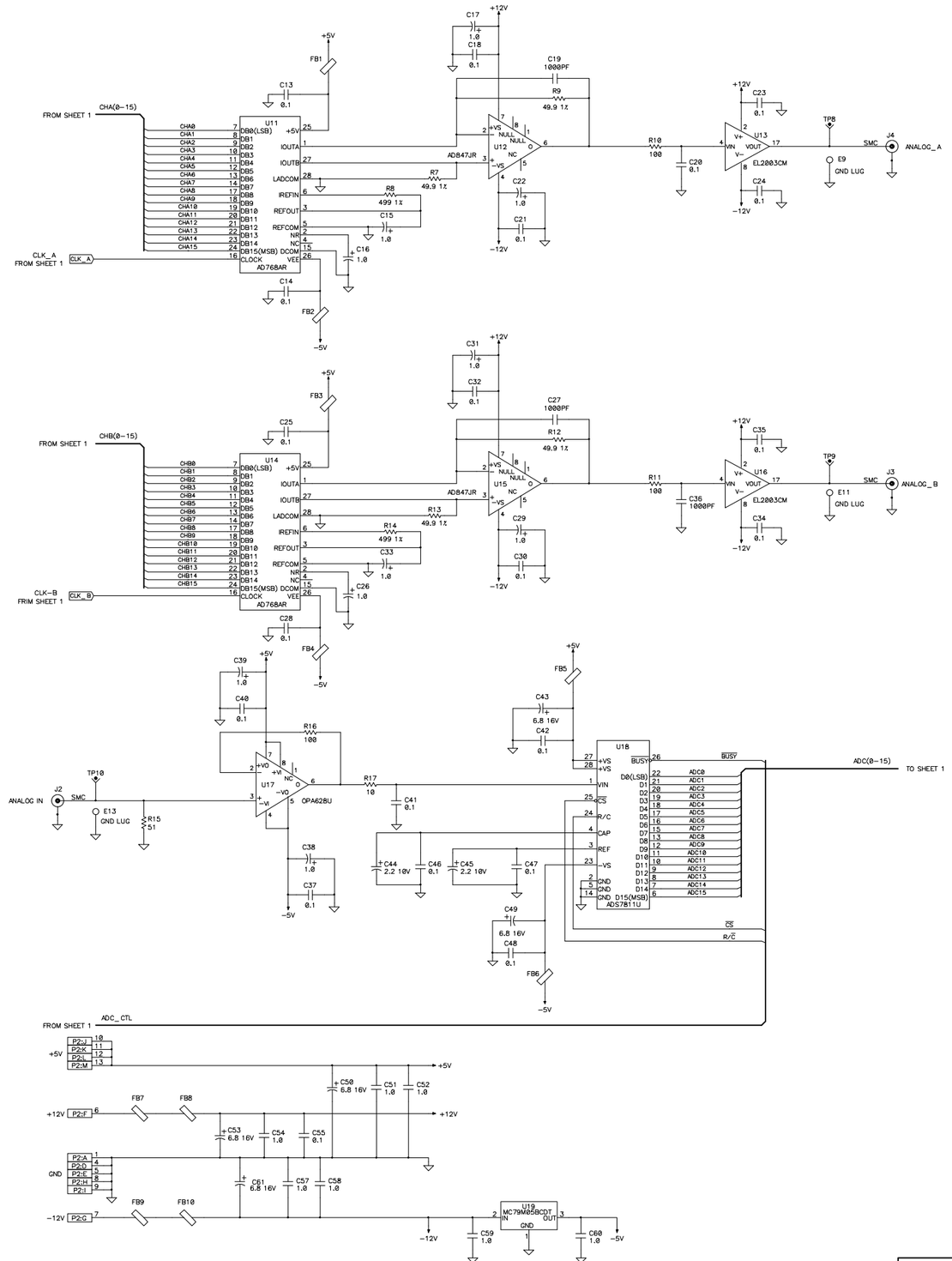

BROOKHAVEN NATIONAL LABORATORY
ASSOCIATED UNIVERSITIES INC.
UPTON, N.Y. 11973

SIZE	DRAWING NUMBER	REV
E	RD75018076	A
QA CATEGORY: A-3	SCALE:	WEIGHT:	SHEET 2 OF 2

DWG NO RD75018076 SHT 2 OF 2 A