1024Frev DDS OUTPUT FREQUENCY and 28MHz
DDS OUPUT FREQUENCY CALCULATIONS
K. Vetter 6/15/99

$Fclk := 100$ MHz 512Frev DDS clock frequency

$DDS_freq := 10, 11 .. 42$ MHz 512Frev DDS output frequency

$freq_word_{DDS_freq} := \left(\frac{DDS_freq}{Fclk}\right) \cdot 2^{32}$ frequency word for the 512Frev DDS

DDS frequency word in hex.

$freq_word_{DDS_freq} =$

	0
0	19999999.999ah
1	1c28f5c2.8f5ch
2	1eb851eb.851fh
3	2147ae14.7ae1h
4	23d70a3d.70a4h
5	26666666.6666h
6	28f5c28f.5c29h
7	2b851eb8.51ech
8	2e147ae1.47aeh
9	30a3d70a.3d71h
10	33333333.3333h
11	35c28f5c.28f6h
12	3851eb85.1eb8h
13	3ae147ae.147bh
14	3d70a3d7.0a3dh
15	40000000.0000h

output frequency of 512Frev DDS before frequency doubler

$DDS_freq =$

10
11
12
13
14
15
16
17
18
19
20
21
22
23
24
25

MHz

1024Frev DDS output frequency calculations based on Cavity Tunning Range
Cavity frequency ranges from 28.15 MHz (high end) down approximatly 1% (281.5 KHz) or 27.8685 MHz.

$DDS_freq := 28 \cdot 10^6$

$Fclk := 80 \cdot 10^6$

$freq_word := \frac{DDS_freq}{Fclk} \cdot 2^{32}$ $\quad freq_word = 59999999.99ah$

$DDS_freq_upper := 28.15 \cdot 10^6$ Upper limit of cavity frequency

$Fclk_upper := \left(\frac{DDS_freq_upper}{freq_word}\right) \cdot 2^{32}$ $\quad Fclk_upper = 8.043 \cdot 10^7$ Hz

$DDS_freq_lower := 27.8685 \cdot 10^6$ lower limit of cavity frequency

$Fclk_lower := \left(\frac{DDS_freq_lower}{freq_word}\right) \cdot 2^{32}$ $\quad Fclk_lower = 7.962 \cdot 10^7$ Hz

DDS SYSTEM FREQUENCY CALCULATIONS

$$fw1 := \frac{40 \cdot 10^6}{100 \cdot 10^6} \cdot 2^{32}$$

Frequency word for 512Frev DDS, from COM. PORT

$$fw2 := \frac{28 \cdot 10^6}{80 \cdot 10^6} \cdot 2^{32}$$

$fw2 = 1.503 \cdot 10^9$ $\quad$ $fw2 = 59999999.99ah$

$$f1out := \frac{fw1}{2^{32}} \cdot 100 \cdot 10^6$$

1024Frev output frequency

$$f2out := \frac{fw2}{2^{32}} \cdot 2 \cdot f1out$$

28MHz output frequency

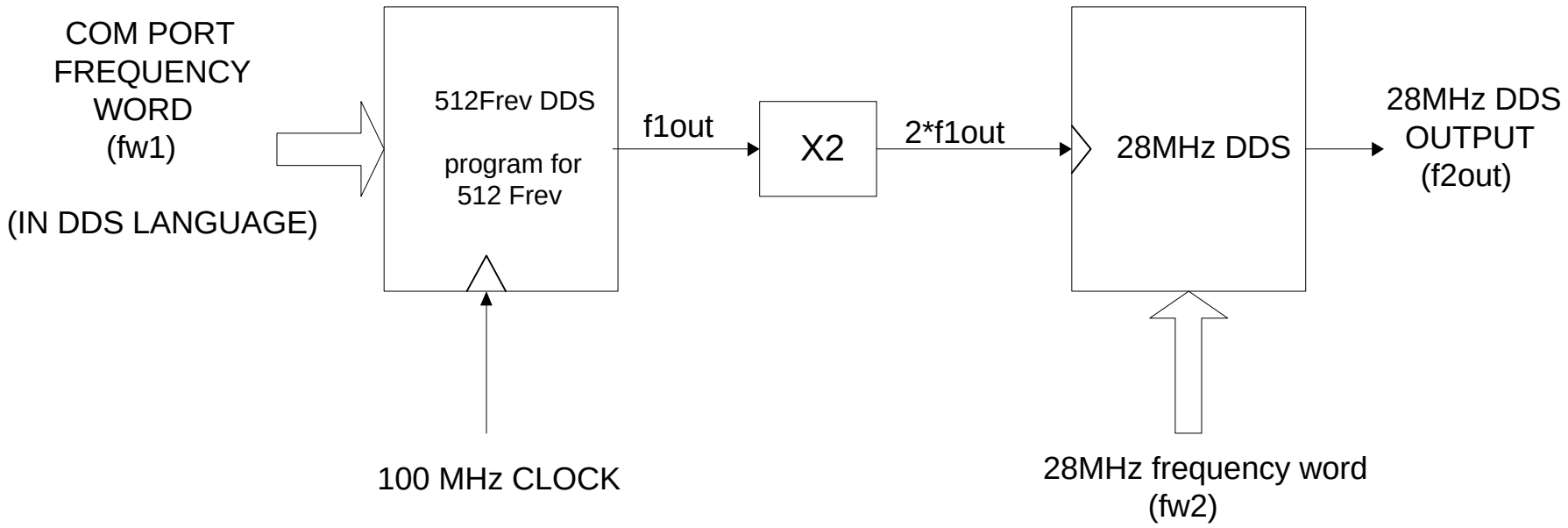

$$f2out := 2 \cdot \frac{fw2 \cdot fw1}{2^{64}} \cdot 100 \cdot 10^6$$

output frequency of 28MHz DDS (Hz)

$f2out = 2.8 \cdot 10^7$ Hz