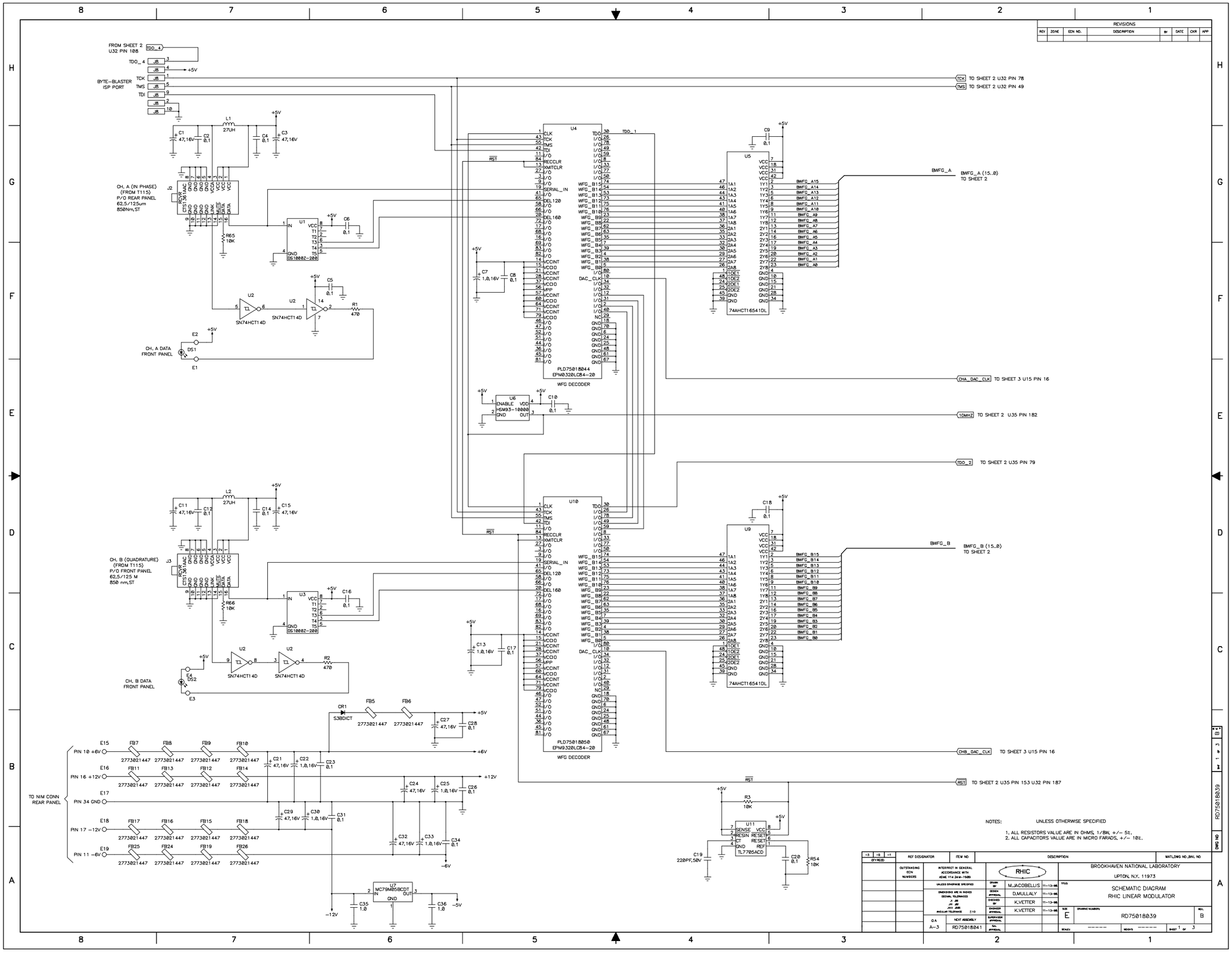

NOTES: UNLESS OTHERWISE SPECIFIED

1. ALL RESISTORS VALUE ARE IN OHMS, 1/8W, +/- 5%.
2. ALL CAPACITORS VALUE ARE IN MICRO FARADS, +/- 10%.

REV	ZONE	ECN NO.	DESCRIPTION	BY	DATE	CKR	APP

REF DESIGNATOR	ITEM NO	DESCRIPTION	MATL.DWG NO./BNL NO

OUTSTANDING ECN NUMBERS

INTERPRET IN GENERAL ACCORDANCE WITH ASME Y14.24M-1989

UNLESS OTHERWISE SPECIFIED

DIMENSIONS ARE IN INCHES
DECIMAL TOLERANCES
.X ±.05
.XX ±.02
.XXX ±.005
ANGULAR TOLERANCE ±1.0

Q.A. A-3 NEXT ASSEMBLY RD75018041

RHIC

DRAWN BY	M.JACOBELLIS	11-13-98
DESIGN APPROVAL	D.MULLALY	11-13-98
CHECKED BY	K.VETTER	11-13-98
ENGINEER APPROVAL	K.VETTER	11-13-98
SUPERVISOR APPROVAL		
Q.A. APPROVAL		

BROOKHAVEN NATIONAL LABORATORY
UPTON, N.Y. 11973

TITLE: SCHEMATIC DIAGRAM
RHIC LINEAR MODULATOR

SIZE E | DRAWING NUMBER RD75018039 | REV. B

SCALE: ------ | WEIGHT: ------ | SHEET 1 OF 3

DWG NO RD75018039

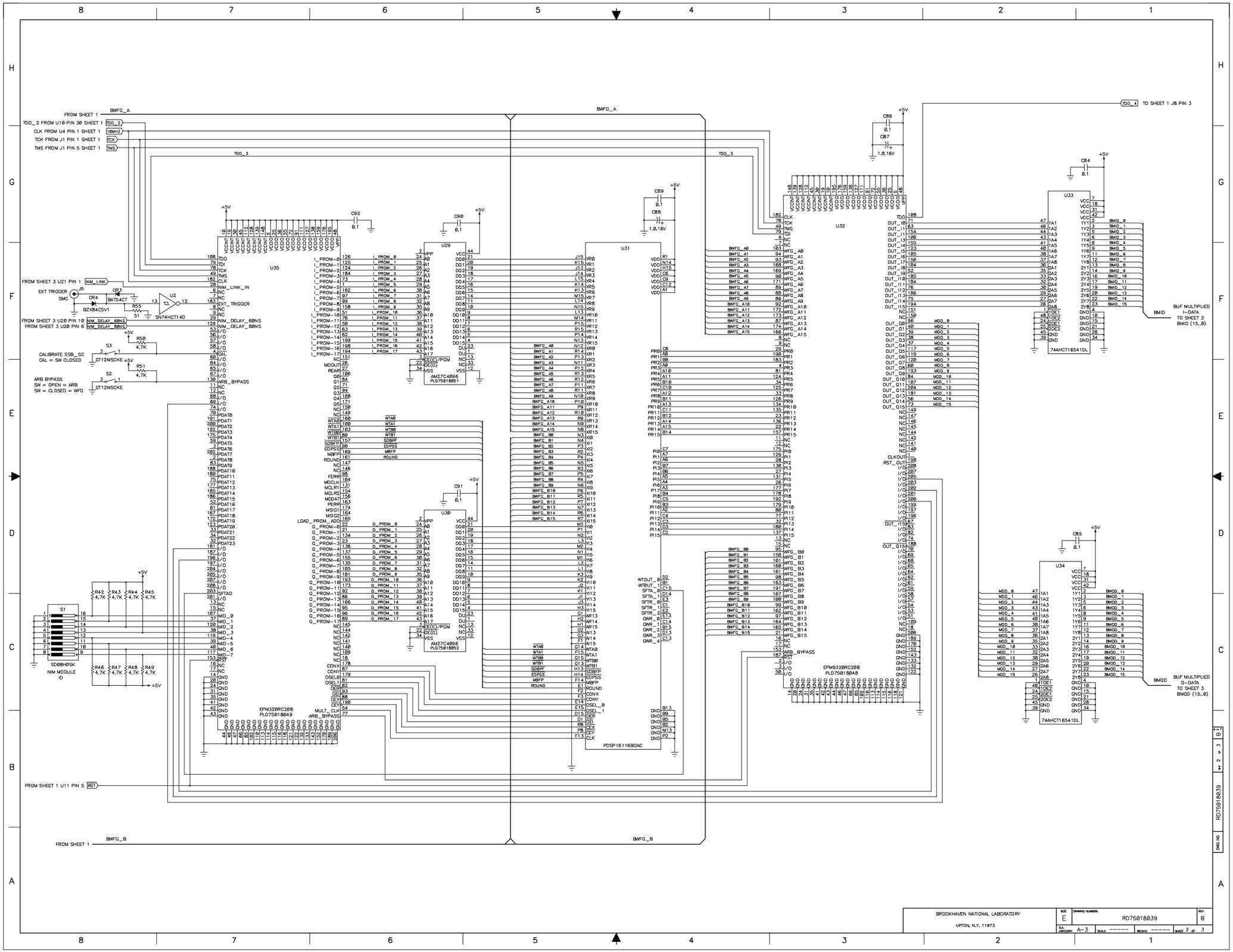
FROM SHEET 1
TDO_2 FROM U18 PIN 30 SHEET 1
CLK FROM U4 PIN 1 SHEET 1
TCK FROM J1 PIN 1 SHEET 1
TMS FROM J1 PIN 5 SHEET 1
FROM SHEET 3 U21 PIN 1
EXT TRIGGER
FROM SHEET 3 U20 PIN 10
FROM SHEET 3 U20 PIN 6
CALIBRATE SSB_SC
CAL = SW CLOSED
ARB BYPASS
SW = OPEN = ARB
SW = CLOSED = WFG
U35
U29
U30
U31
U32
U33
U34
U2
SN74HCT14D
AM27C4096
PLD75018051
PLD75018052
EPM9320RC208
PLD75018049
PLD75018048
PDSP16116BQAC
74AHCT16541DL
SD08H0SK
NIM MODULE
ID
TO SHEET 1 J8 PIN 3
BUF MULTIPLIED
I-DATA
TO SHEET 3
BMID (15..0)
BUF MULTIPLIED
Q-DATA
TO SHEET 3
BMQD (15..0)
FROM SHEET 1 U11 PIN 5
FROM SHEET 1
BROOKHAVEN NATIONAL LABORATORY
UPTON, N.Y. 11973
RD75018039
SHEET 2 OF 3

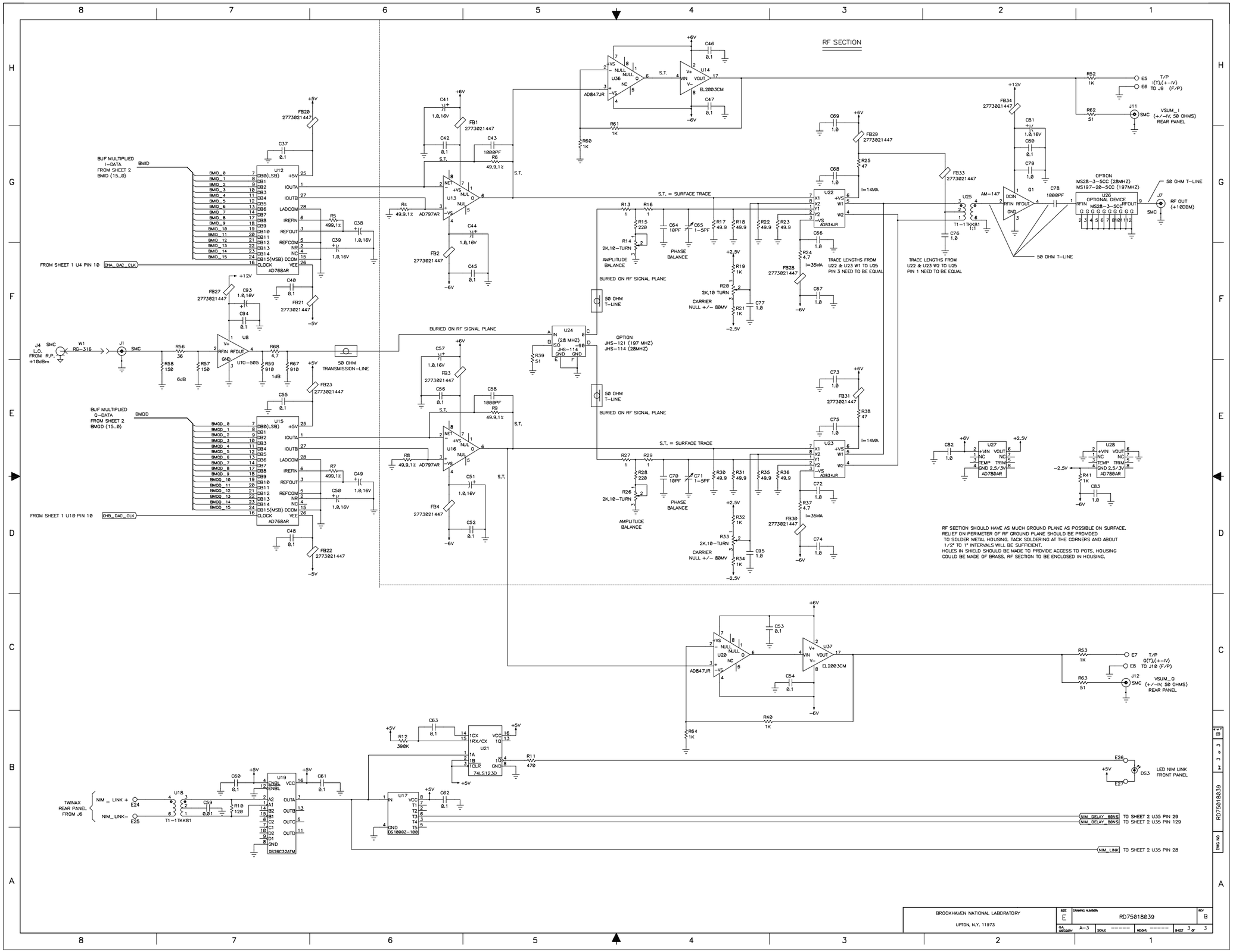
RF SECTION
BUF MULTIPLIED I-DATA FROM SHEET 2 BMID (15..0)
BUF MULTIPLIED Q-DATA FROM SHEET 2 BMQD (15..0)
FROM SHEET 1 U4 PIN 10 CHA_DAC_CLK
FROM SHEET 1 U10 PIN 10 CHB_DAC_CLK
J4 SMC L.O. FROM R.F. +10dBm
W1 RG-316
J1 SMC
50 OHM TRANSMISSION-LINE
S.T. = SURFACE TRACE
BURIED ON RF SIGNAL PLANE
50 OHM T-LINE
OPTION JHS-121 (197 MHZ) JHS-114 (28MHZ)
AMPLITUDE BALANCE
PHASE BALANCE
CARRIER NULL +/- 80MV
TRACE LENGTHS FROM U22 & U23 W1 TO U25 PIN 3 NEED TO BE EQUAL
TRACE LENGTHS FROM U22 & U23 W2 TO U25 PIN 1 NEED TO BE EQUAL
OPTION MS28-3-5CC (28MHZ) MS197-20-5CC (197MHZ)
RF OUT (+10DBM)
T/P I(T),(+-IV) TO J9 (F/P)
VSUM_I (+/-IV, 50 OHMS) REAR PANEL
T/P Q(T),(+-IV) TO J10 (F/P)
VSUM_Q (+/-IV, 50 OHMS) REAR PANEL
RF SECTION SHOULD HAVE AS MUCH GROUND PLANE AS POSSIBLE ON SURFACE. RELIEF ON PERIMETER OF RF GROUND PLANE SHOULD BE PROVIDED TO SOLDER METAL HOUSING. TACK SOLDERING AT THE CORNERS AND ABOUT 1/2" TO 1" INTERVALS WILL BE SUFFICIENT. HOLES IN SHIELD SHOULD BE MADE TO PROVIDE ACCESS TO POTS. HOUSING COULD BE MADE OF BRASS. RF SECTION TO BE ENCLOSED IN HOUSING.
TWINAX REAR PANEL FROM J6
NIM_LINK+ E24
NIM_LINK- E25
LED NIM LINK FRONT PANEL
NIM_DELAY_68NS TO SHEET 2 U35 PIN 29
NIM_DELAY_88NS TO SHEET 2 U35 PIN 129
NIM_LINK TO SHEET 2 U35 PIN 28
BROOKHAVEN NATIONAL LABORATORY
UPTON, N.Y. 11973
SIZE E
DRAWING NUMBER RD75018039
REV B
QA CATEGORY A-3
SCALE ------
WEIGHT(#) ------
SHEET 3 OF 3

-3	-2	-1	REFERENCR DESIGNATIONS	ITEM NO.	DESCRIPTION	MATL DWG NO.,BNL NO.
			REFERENCE	75	SCHEMATIC DIAGRAM	RD75018039
		2	S2,3	74	SWITCH, SPST, ULTRA-MINI, SMT,TOGGLE (C&K)	GT12MSCKE
		1	S1	73	SWITCH, SPST, 8 POS DIP, SMD (C&K)	SD08HOSK
		5	J1,5,7,11,12	72	CONNECTOR ,SMC, BULKHEAD MOUNTED RGT ANG, MALE JACK, GOLD PLATED (AEP)	1110-1511-002
		1	J8	71	HEADER 10 PIN MALE RIGHT ANGLE (SULLINS ELECTRONIC INC)	PTC05DGBN
				70		
		1	XU31	69	SOCKET 145 PIN PGA, 15 X 15 GRID (MIL-MAX)	510-93-145-15-08-1001
		1	XU29,30	68	SOCKET 44 PIN PLCC (BERG)	PLCC44P-T
				67		
		1	Q1	66	I.C. HIGH PERFORMANCE AMPLIFIER, 17 DB GAIN 5-500 MHz (M/A-COM INC)	AM-/AMC-147
				65		
		2	L1,2	64	COIL, 27.0UH, SHIELDED SMD (DELEVAN INC)	1210-273KB
				63		
		1	CR4	62	DIODE, ZENER, 5.1V, SMT, SOD3	BZX84C5V1ZXCT
		1	CR3	61	DIODE, VBR=30V, SMT, SOT23, SCHOTTKY	BAT54CT
		1	CR1	60	DIODE, 3 AMP 100V SMC SMD (DIODE INC, DIGI-KEY PART NO.)	S3BDICT
				59		
		33	FB1,2,3,4,5,6,7,8,9,10,11 12,13,14,15,16,17,18,19 20,21,22,23,24,25,26,27 28,29,30,31,33,34	58	FERRITE BEAD SURFACE MOUNT(FAIR-RITE PRODUCTS CORP.)	2773-021447
		2	R59,67	57	RESISTOR, 910 OHMS, 1/8W, 5% SMT RC1206 (PANASONIC)	ERJ-8GEYJ911U
		2	R57,58	56	RESISTOR, 150 OHMS, 1/8W, 5% SMT RC1206 (PANASONIC)	ERJ-8GEYJ151U
		1	R56	55	RESISTOR, 36 OHMS, 1/8W, 5% SMT RC1206 (PANASONIC)	ERJ-8GEYJ360U
		10	R42,43,44,45,46,47, 48,49,50,51	54	RESISTOR, 4.7K OHMS, 1/8W, 5% SMT RC1206 (PANASONIC)	ERJ-8GEYJ472U
		4	R39,55,62,63	53	RESISTOR, 51 OHMS, 1/8W, 5% SMT RC1206 (PANASONIC)	ERJ-8GEYJ510U
		2	R25,38	52	RESISTOR, 47 OHMS, 1/8W, 5% SMT RC1206 (PANASONIC)	ERJ-8GEYJ470U
		3	R24,37,68	51	RESISTOR, 4.7 OHMS, 1/8W, 5% SMT RC1206 (PANASONIC)	ERJ-8GEYJ4.70U
		11	R19,21,32,34,40,41,52, 53,60,61,64	50	RESISTOR, 1K OHMS, 1/8W, 5% SMT RC1206 (PANASONIC)	ERJ-8GEYJ102U
		8	R17,18,22,23,30,31,35,36	49	RESISTOR,49.9 OHMS, 1/8W, 5% SMT RC1206 (PANASONIC)	ERJ-8GEYJ49.9U
		2	R15,28	48	RESISTOR, 220 OHMS, 1/8W, 5% SMT RC1206 (PANASONIC)	ERJ-8GEYJ221U
		4	R14,20,26,33	47	POTENTIOMETER, 2K OHMS, 1/4W, 10% TOP ADJUST SMT 3224 (BOURNS)	3224W-1-202D
		4	R13,16,27,29	46	RESISTOR, 1 OHMS, 1/8W, 5% SMT RC1206 (PANASONIC)	ERJ-8GEYJ100U
		1	R12	45	RESISTOR, 390K OHMS, 1/8W, 5% SMT RC1206 (PANASONIC)	ERJ-8GEYJ394U
		1	R10	44	RESISTOR, 120 OHMS, 1/8W, 5% SMT RC1206 (PANASONIC)	ERJ-8GEYJ121U
		2	R5,7	43	RESISTOR, 499.1 OHMS, 1/8W, 1% SMT RC1206 (PANASONIC)	ERJ-8ENF499
		3	R4,6,8	42	RESISTOR, 49.9 OHMS, 1/8W, 1% SMT RC1206 (PANASONIC)	ERJ-8ENF49R9
		4	R3,54,65,66	41	RESISTOR, 10K OHMS, 1/8W, 5% SMT RC1206 (PANASONIC)	ERJ-8GEYJ103U
		3	R1,2,11	40	RESISTOR, 470 OHMS, 1/8W, 5% SMT RC1206 (PANASONIC)	ERJ-8GEYJ471U
				39		
				38		
				37		
		16	C35,36,66,67,68,69, 72,73,74,75,76,77, 79,82,83,95	36	CAPACITOR, 1.0UF, 16V, +80%-20%, SMT 1206, CERAMIC (TDK CORP OF AMERICA)	CC1206CY5V105Z
		2	C65,71	35	TRIMMER CAPACITOR, CERA-TRIM, 1-5PF, 250V, (JOHANSON MFG. CORP.)	2320-1
		2	C64,70	34	CAPACITOR, 10PF, 50V, +/-0.5PF, SMT 1206 (PANASONIC)	ECU-V1H100DCM
		1	C59	33	CAPACITOR, 0.01UF, 50V, 5%, SMT 1206 (PANASONIC)	ECU-V1H103KBM
		3	C43,58,78	32	CAPACITOR, 1000PF, 50V, 10%, SMT 1206 (PANASONIC)	ECU-V1H102KBM
		1	C19	31	CAPACITOR, 220PF, 50V, 10%, SMT 1206 (PANASONIC)	ECU-V1H221KBM
		18	C7,13,22,25,30,33, 38,39,41,44,49,50, 51,57,81,87,88,93	30	CAPACITOR, 1.0UF, 16V, 20%, SMT, TANTALUM, 3216 (PANASONIC)	ECS-T1CY105R
		43	C2,4,5,6,8,9,10, 12,14,16,17,18,20, 23,26,28,31,34,37, 40,42,45,46,47,48, 52,53,54,55,56,60, 61,62,63,80,84,85, 86,89,90,91,92,94	29	CAPACITOR, 0.10UF, 50V, 5%, SMT, 1206, CERAMIC (PANASONIC)	ECU-V1H104KBW
		9	C1,3,11,15,21, 24,27,29,32	28	CAPACITOR, 47UF, 16V, 20%, SMT, 3216 (PANASONIC)	ECE-V1CA470P
				27		
				26		
		2	U32,35	25	I.C. CPLD, 208 PIN PQFP (ALTERA) (U32, PLD75018048 & U35, PLD75018049)	EPM9320RC208
		1	U31	24	I.C. 16 BY 16 BIT COMPLEX MULTIPLIER (MITEL SEMICONDUCTOR)	PDSP16116BOAC
		2	U29,30	23	I.C. CPLD, 44 PIN PLCC (ADVANCED MICRO DEVICES)(U29,PLD75018051 U30,PLD75018052)	AM27C4096-120JC
		2	U27,28	22	I.C. HIGH PRECISION VOLTAGE REFERENCE (ANALOG DEVICES)	AD780AR
		1	U26	21	BANDPASS FILTER CHOOSE (MS28-3-5CC FOR 28MHZ OR MS197-20-5CC FOR 197MHZ) (LARK ENGINEERING CO.)	SEL. MS28-3-5CC OR MS197-20-5CC
		1	U24	20	I.C. SURFACE MOUNT QUADRATURE HYBRID, JHS-114, 20 -40 MHz FOR 28MHz OR JHS-121, 100 -200 MHz FOR 197 MHz (M/A-COM INC)	SEL. JHS-114 OR JHS-121
		2	U22,23	19	I.C. 500 MHz FOUR-QUADRANT MULTIPLIER (ANALOG DEVICES)	AD834JR
		1	U21	18	I.C. MULTIVIBRATOR (TEXAS INSTRUMENTS)	74LS123D
		2	U20,36	17	I.C. HIGH SPEED LOW POWER MONOLITHIC OP AMP (ANALOG DEVICES)	AD847JR
		1	U19	16	I.C. QUAD, DIFFERENTIAL LINE RECEIVER, SMT (NATIONAL SEMICONDUCTOR)	DS26C32ATM
		2	U18,25	15	TRANSFORMER, RF WIDEBAND, SMT (MINI-CIRCUITS)	T1-1T-KK81
		2	U14,37	14	I.C. VIDEO LINE DRIVER (ELANTEC)	EL2003CM
		1	U17	13	I.C. 5-TAP SILCON DELAY LINE DS1000 (DALLAS SEMICONDUCTOR)	DS1000Z-100
		2	U13,16	12	I.C. LOW NOISE , LOW DISTORTION OP AMP (ANALOG DEVICES)	AD797BR
		2	U12,15	11	I.C. 16-BIT, 30 MSPS D/A CONVERTER (ANALOG DEVICES)	AD768AR
		1	U11	10	I.C. SUPPLY VOLTAGE SUPERVISORS (TEXAS INSTRUMENTS)	TL7705ACD
		1	U8	9	I.C. BIPOLAR RF AMPLIFIER (AVANTEK PRODUCTS)	UTO-505
		1	U7	8	NEGATIVE 5V FIXED VOLTAGE REGULATOR (MOTOROLA)	MC79M05BCDT
		1	U6	7	I.C. OSCILLATOR, 10MHZ HCMOS (CONNOR-WINFIELD HSM93-10,000) (DIGI-KEY NO.)	CW303
		3	U5,9,33	6	I.C. 16-BIT BUFFERS/DRIVERS WITH 3-STATE OUTPUTS (TEXAS INSTRUMENTS)	74AHCT16541DL
		2	U4,10	5	I.C. CPLD, 84 PIN PLCC (ALTERA) (U4, PLD75018044 & U5, PLD75018050)	EPM9320LC84-20
		1	U2	4	I.C. HEX SCHMITT-TRIGGER INVERTERS (TEXAS INSTRUMENTS)	SN74HCT14D
		2	J2,3	3	I.C. FIBER OPTIC RECEIVER, LIGHTWAVE DATA LINK (CTS CORPORATION)	CTS1361AAC
		2	U1,3	2	I.C. 5-TAP SILCON DELAY LINE DS1000 (DALLAS SEMICONDUCTOR)	DS1000Z-200
		1		1	PRINTED WIRING BOARD DRILLING	RD75018040

QTY REQD

OUTSTANDING ECN NUMBERS

INTERPRET IN GENERAL ACCORDANCE WITH ASME Y14.24M-1989

UNLESS OTHERWISE SPECIFIED

DIMENSIONS ARE IN INCHES
DECIMAL TOLERANCES
.X .05
.XX .02
.XXX .005
ANGULAR TOLERANCE +/-1°

Q.A. A-3

NEXT ASSEMBLY

RHIC

DRAWN BY	M. JACOBELLIS	11-13-98
DESIGN APPROVAL		
CHECKED BY		
ENGINEER APPROVAL		
SUPERVISOR APPROVAL		
Q.A. APPROVAL		

BROOKHAVEN NATIONAL LABORATORY
UPTON, NEW YORK, 11973

TITLE: PRINTED WIRING BOARD ASSEMBLY
RHIC LINEAR MODULATOR

SIZE: E | DRAWING NUMBER: RD75018041 | REV: B

SCALE: 2 : 1 | WEIGHT: ----- | SHEET 1 OF 2

DWG NO. RD75018041 SHT 1 OF 2 REV B

3 2 1