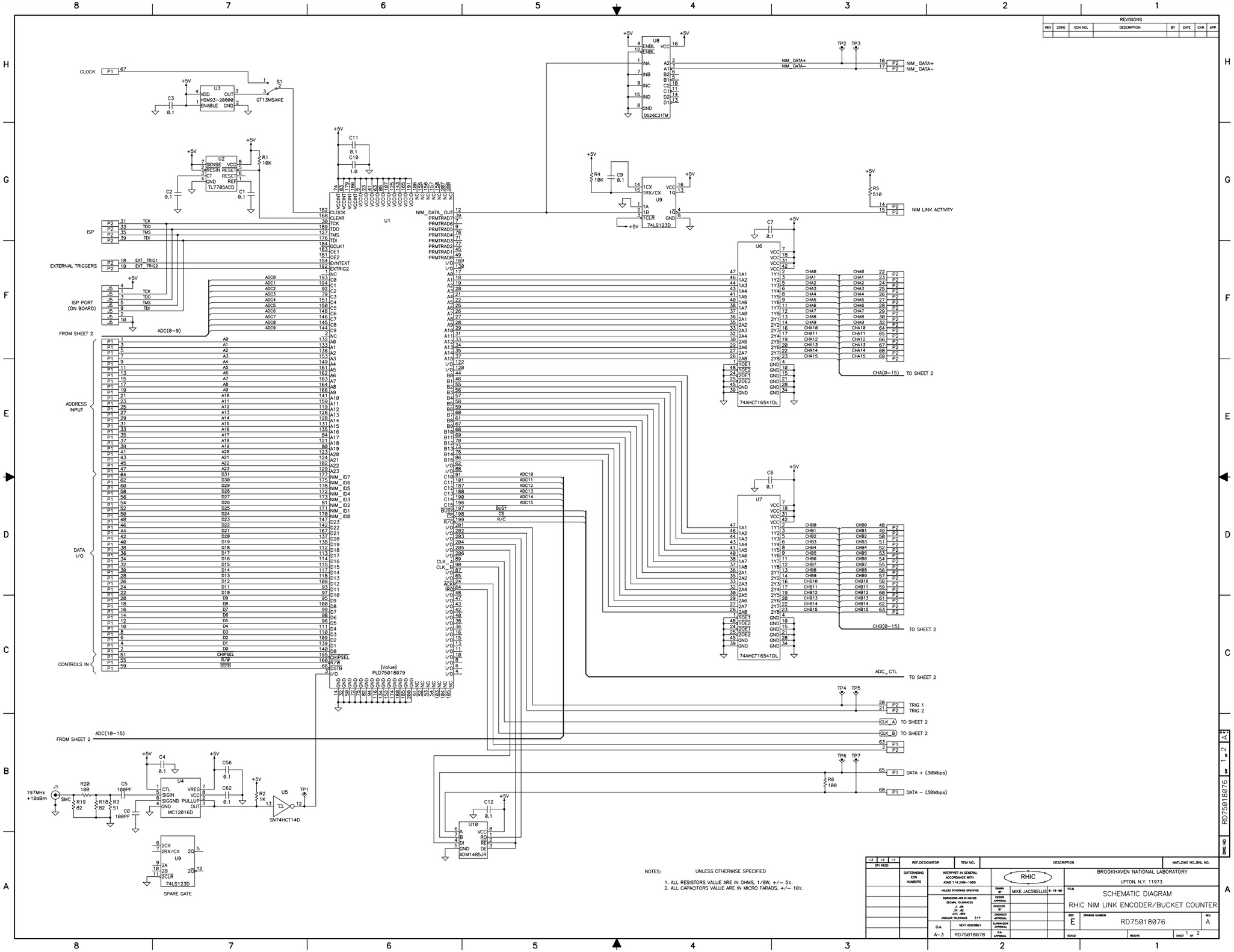

NOTES: UNLESS OTHERWISE SPECIFIED

1. ALL RESISTORS VALUE ARE IN OHMS, 1/8W, +/− 5%.
2. ALL CAPACITORS VALUE ARE IN MICRO FARADS, +/− 10%.

REVISIONS							
REV	ZONE	ECN NO.	DESCRIPTION	BY	DATE	CKR	APP

-3 QTY REQD	-2	-1	REF.DESIGNATOR	ITEM NO.	DESCRIPTION	MATL.DWG NO.,BNL NO.

OUTSTANDING ECN NUMBERS

INTERPRET IN GENERAL ACCORDANCE WITH ASME Y14.24M-1989

UNLESS OTHERWISE SPECIFIED DIMENSIONS ARE IN INCHES DECIMAL TOLERANCES .X .06 .XX .02 .XXX .005 ANGULAR TOLERANCE ±1°

Q.A. A-3 | NEXT ASSEMBLY RD75018078

RHIC

DRAWN BY MIKE JACOBELLIS 8-18-98

DESIGN APPROVAL

CHECKED BY

ENGINEER APPROVAL

SUPERVISOR APPROVAL

Q.A. APPROVAL

BROOKHAVEN NATIONAL LABORATORY
UPTON, N.Y. 11973

TITLE: SCHEMATIC DIAGRAM
RHIC NIM LINK ENCODER/BUCKET COUNTER

SIZE E | DRAWING NUMBER RD75018076 | REV. A

SCALE | WEIGHT | SHEET 1 OF 2

DWG NO RD75018076 SHT 1 OF 2 A

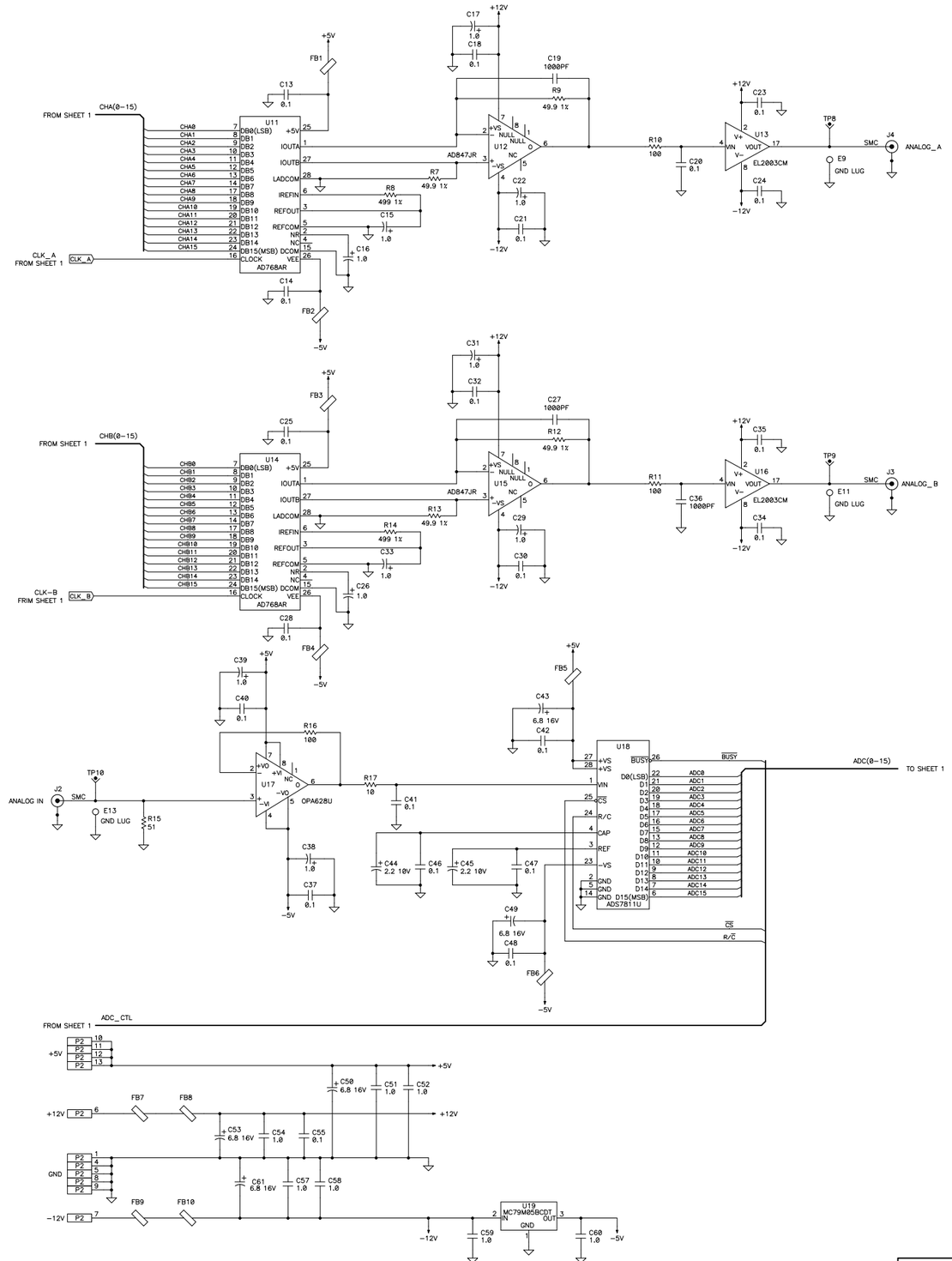

BROOKHAVEN NATIONAL LABORATORY
ASSOCIATED UNIVERSITIES INC.
UPTON, N.Y. 11973

SIZE	DRAWING NUMBER	REV.
E	RD75018076	A
QA CATEGORY: A-3	SCALE:	WEIGHT:	SHEET 2 OF 2

DWG NO. RD75018076 SHT 2 of 2 A

			REFERENCE	53	SCHEMATIC DIAGRAM	RD75018076
				52		
				51		
1	1	1	J5	50	HEADER, 10 PIN MALE (SULLINS ELECTRONICS INC)	PTC05DAAN
–	–	4	J1,2,3,4	49	CONNECTOR, SMC, BULKHEAD MOUNTED RGT ANG, MALE JACK (AEP)	1110–1511–002
1	–	–	J1			
2	2	2	P1,2	48	CONNECTOR, 69 PIN SMT, VERTICAL HEADER (CONAN TM)	91910–21569
				47		
3	3	3	E9,11,13	46	WIRE WRAP PIN, T44, .690" LENGTH (VECTOR ELECTRONIC CO.)	A–56390
				45		
–	–	10	FB1,2,3,4,5,6, 7,8,9,10	44	FERRITE BEAD SURFACE MOUNT (FAIR–RITE PRODUCTS CORP.)	2773–021447
				43		
1	1	1	S1	42	SWITCH, TOGGLE, SPDT, SMT (C&K COMPONENTS, INC)	GT13MSAKE
				41		
				40		
–	–	2	R18,19	39	RESISTOR, 82 OHMS, 1/8W, 5%, SMT RC1206 (PANASONIC)	ERJ–8GEYJ820U
–	–	1	R17	38	RESISTOR, 10 OHMS, 1/8W, 5%, SMT RC1206 (PANASONIC)	ERJ–8GEYJ100U
–	–	2	R8,14	37	RESISTOR, 499.1 OHMS, 1/8W, 1%, SMT RC1206 (PANASONIC)	ERJ–8ENF499
–	–	4	R7,9,12,13	36	RESISTOR, 49.9 OHMS, 1/8W, 1%, SMT RC1206 (PANASONIC)	ERJ–8ENF49R9
–	–	5	R6,10,11,16,20	35	RESISTOR, 100 OHMS, 1/8W, 5%, SMT RC1206 (PANASONIC)	ERJ–8GEYJ101U
–	1	1	R5	34	RESISTOR, 510 OHMS, 1/8W, 5%, SMT RC1206 (PANASONIC)	ERJ–8GEYJ511U
–	2	2	R3,15	33	RESISTOR, 51 OHMS, 1/8W, 5%, SMT RC1206, (PANASONIC)	ERJ–8GEYJ510U
1	–	1	R2	32	RESISTOR, 1K OHMS, 1/8W, 5%, SMT RC1206 (PANASONIC)	ERJ–8GEYJ102U
2	2	2	R1,4	31	RESISTOR, 10K OHMS, 1/8W, 5%, SMT RC1206 (PANASONIC)	ERJ–8GEYJ103U
				30		
				29		
–	–	2	C44,45	28	CAPACITOR, 2.2UF, 10V, 20%, TANTALUM, SMT 3216 (PANASONIC)	ECS–H1AY225R
5	5	5	C43,49,50,53,61	27	CAPACITOR, 6.8UF, 16V, 20%, TANTALUM, SMT 6032 (PANASONIC)	ECS–51CC685R
–	–	3	C19,27,36	26	CAPACITOR, 1000PF, 50V, 10%, SMT 1206 (PANASONIC)	ECU–V1H102KBM
10	10	10	C15,16,17,22,26, 29,31,33,38,39	25	CAPACITOR, 1.0UF, 16V, 20%, TANTALUM, SMT 3216 (PANASONIC)	ECS–T1CY105R
8	8	8	C10,51,52,54, 57,58,59,60,	24	C APACITOR, 1.0UF, 16V, +80% –20%, SMT, 1206, CERAMIC (TDK CORP OF AMERICA)	CC1206CY5V105Z
2	–	2	C5,6	23	CAPACITOR, 100PF, 50V, 5%, SMT, 1206 (PANASONIC)	ECU–V1H101DCM
32	32	32	C1,2,3,4,7,8,9,11, 12,13,14,18,20,21, 23,24,25,28,30,32, 34,35,37,40,41,42, 46,47,48,55,56,62	22	CAPACITOR, 0.10UF, 50V, 5%, SMT, 1206, CERAMIC (PANASONIC)	ECU–V1H104KBW
				21		
				20		
				19		
–	–	1	U19	18	NEGATIVE FIXED VOLTAGE REGULATOR, DPAK (MOTOROLA)	MC79M05CDT
–	–	1	U18	17	I.C. 16–BIT 250 kHz CMOS A/D CONVERTER (ANALOG DEVICES)	ADS7811U
–	–	1	U17	16	I.C. LOW DISTORTION, WIDEBAND, OP AMP (BURR–BROWN)	OPA628U
–	–	2	U13,16	15	I.C. MONOLITHIC BUFFER (ELANTEC)	EL2003CM
–	–	2	U12,15	14	I.C. HIGH SPEED, MONOLITHIC, OP AMP (ANALOG DEVICES)	AD847JR
–	–	2	U11,14	13	I.C. 16–BIT, 30 MSPS D/A CONVERTER (ANALOG DEVICES)	AD768AR
–	–	1	U10	12	I.C. DIFFERENTIAL LINE TRANSCEIVER, RS485, 30 Mbps (ANALOG DEVICES)	ADM1485JR
–	1	1	U9	11	I.C. MONOSTABLE MULTIVIBRATOR (TEXAS INSTRUMENTS)	74LS123D
–	1	1	U8	10	I.C. CMOS QUAD TRI–STATE DIFFERENTIAL LINE DRIVER (NATIONAL SEMICONDUCTOR)	DS26C31TM
–	–	2	U6,7	9	I.C. 16–BIT BUFFERS/DRIVERS WITH 3–STATYE OUTPUTS (TEXAS INSTRUMENTS)	74AHCT16541DL
1	–	1	U5	8	I.C. HEX SCHMITT–TRIGGER INVERTERS (TEXAS INSTRUMENTS)	74HC14D
1	–	1	U4	7	I.C. DUAL MODULE PRESCALER, DIVIDE BY 40/41 (MOTOROLA)	MC12016D
1	1	1	U3	6	I.C. OSCILLATOR, TTL 20 MHz (CONNOR–WINFIELD)	HSM93–20.0000
1	1	1	U2	5	I.C. VOLTAGE SUPPLY MONITOR (TEXAS INSTRUMENTS)	TL7705ACD
1	1	1	U1	4	I.C. CPLD, 208 PIN PLCC (PLD NO. PLD75018079) (ALTERA)	EPM7256SRC208–15
				3		
				2		
1	1	1		1	PRINTED WIRING BOARD	RD75018077
–3	–2	–1	REFERENCR DESIGNATIONS	ITEM NO.	DESCRIPTION	MATL DWG NO.,BNL NO.

QTY REQD

OUTSTANDING ECN NUMBERS

INTERPRET IN GENERAL ACCORDANCE WITH ASME Y14.24M–1989

UNLESS OTHERWISE SPECIFIED

DIMENSIONS ARE IN INCHES
DECIMAL TOLERANCES
.X .05
.XX .02
.XXX .005
ANGULAR TOLERANCE +/–1°

Q.A. A–3

NEXT ASSEMBLY

RHIC

DRAWN BY	M. JACOBELLIS	8–18–98
DESIGN APPROVAL	D.MULLALY	8–29–98
CHECKED BY	K.VETTER	8–18–98
ENGINEER APPROVAL	K.VETTER	8–18–98
SUPERVISOR APPROVAL		
Q.A. APPROVAL		

BROOKHAVEN NATIONAL LABORATORY
UPTON, NEW YORK, 11973

TITLE: PRINTED WIRING BOARD ASSEMBLY
RHIC NIM LINK
ENCODER/BUCKET COUNTER

SIZE E | DRAWING NUMBER: RD75018078 | REV A

SCALE: 2 : 1 | WEIGHT: ----- | SHEET 1 OF 1

REV A | SHT 1 OF 1 | DWG NO. RD75018078

A