AD/AP/TN–11

BROOKHAVEN NATIONAL LABORATORY
ACCELERATOR DEVELOPMENT DEPARTMENT
Accelerator Physics Division

**Accelerator Physics Technical Note No. 11**

# BEAM POSITION MONITOR

G. DiMassa
and
A.G. Ruggiero

October 1988

## 1. INTRODUCTION

A large proportion of devices used to interact with charged-particle beams in accelerator or storage rings can be classified as pick-ups or kickers. These devices extract information about the particle motion or affect a change in the motion. One device used frequently as pick-up or kicker is made with two little plates with one or more terminations per plate [1,2]. In this paper the structure with one termination per plate is examined.

Laslett [3], studying the effect of a centrally loaded clearing electrode plate on the transverse coherent oscillation of a coasting beam in a pipe of rectangular cross section, introduced the transmission line equations governing the charge and current distribution on the electrode.

Sessler and Vaccaro [4] investigated the longitudinal dynamics of the beam for the case of a pipe of circular cross section. They treated the clearing electrode as a lumped discontinuiy of the electrical properties of the vacuum chamber walls.

Ruggiero, Strolin and Vaccaro [5] used a circular geometry and a more rigorous expression for the induced charges and currents (always averaged along the transverse size of the plate).

Ruggiero and Vaccaro [6,7] worked out the problem of the field produced by a coherently oscillating beam in the presence of conductive plates terminated at both ends using as variables the termination impedance.

Ruggiero [8] used the previous results to study the line pick-ups in rectangular and circular geometry in one dimensional approximation.

In this paper the azimuthal dependence is taken into account in circular geometry for one plate of given dimensions. The geometry investigated is the one shown in Fig. 1.

In section 2 the charges and currents induced on the plates are studied using azimuthal and frequency harmonic expansions.

In section 3 the potential equation are derived and developed in the frequency domain in order to give the close expression of the output voltage.

The numerical results are discussed in section 4.

## 2. CHARGE AND CURRENT INDUCED ON THE PLATES

We consider a bunch of charged particles travelling inside a circular accelerator vacuum chamber. Assuming the radius $R$ of the closed orbit to be much larger than the radius of the vacuum chamber we can treat the particles as travelling along a straight cylindrical pipe of radius $b$. We want to calculate the voltage induced on a pair of electrically conductive plates after the passage of a single bunch.

Let $z$ be the axis of the pipe and $(r, \theta)$ the transverse coordinates. We can associate to the beam a charge and current distribution

$$\rho = Ne\frac{\delta(r - r_0)}{r}\delta(\theta - \theta_0)f(u) \tag{1}$$

$$\underline{J} = (0, 0, \beta c \rho) \tag{2}$$

where

$v = \beta c$ is the beam velocity;

$N$ is the number of particles in the beam;

$e$ is the particle charge;

$(r_0, \theta_0)$ is the beam position in the transverse plane;

$f(u) = f(z - vt)$ is a function depending on the bunch shape.

The expansion of $f(u)$

$$f(u) = \int \tilde{f}(k)e^{jku}dk \tag{3}$$

$$\tilde{f}(k) = \frac{1}{2\pi}\int f(u)e^{-jku}du \tag{4}$$

where the integrals extend from $-\infty$ to $+\infty$.

The potentials due to charge and current distribution

$$V = V(z, \theta, r, t) = V(r, \theta, u) \tag{5}$$

$$\underline{A} = (0, 0, A) \qquad A = \beta\ V \tag{6}$$

Equation (6) allows us to solve the problem through the only scalar Helmotz equation

$$\nabla^2 V - \frac{1}{c^2}\frac{\partial^2 V}{\partial t^2} = -4\pi\rho \tag{7}$$

The expansion of $V$ and $\rho$ in azimuthal harmonics

$$\rho = \frac{Ne}{\pi r}\delta(r - r_0)\sum_{m=0}^{+\infty}\int \epsilon_m \cos m(\theta - \theta_0)\tilde{f}(k)e^{jku}dk \tag{8}$$

$$V = \sum_{m=0}^{+\infty}\int \epsilon_m \tilde{V}_m(k)\cos m(\theta - \theta_0)e^{jku}dk \tag{9}$$

where

$$\epsilon_m = \begin{cases} 1/2 & \text{if } m = 0 \\ 1 & \text{if } m \neq 0 \end{cases}$$

Eq. (7) written in cylindrical coordinates for the single harmonic $\tilde{V}_m$

$$\frac{d^2\tilde{V}_m}{dr^2} + \frac{1}{r}\frac{d\tilde{V}_m}{dr} - \left(\frac{m^2}{r^2} + q^2\right)\tilde{V}_m = -4Ne\tilde{f}(k)\frac{\delta(r - r_0)}{r} \tag{10}$$

where $q = k/\gamma$.

Equation (10) is an inhomogeneous Bessel equation with general solution

$$\tilde{V}_m = AI_m(qr) + BK_m(qr) + C_m \tag{11}$$

where $I_m$ and $K_m$ are modified Bessel functions.

The particular integral $C_m$ is found to be

$$C_m = -4Ne\tilde{f}(k)\left\{I_m(qr_0)K_m(qr) - K_m(qr_0)I_m(qr)\right\}U(r_0 - r) \tag{12}$$

where $U(x)$ is the Heaveside function: $U(x) = 0$ for $x < 0$ and $U(x) = 1$ for $x > 0$.

By imposing the boundary conditions $\tilde{V}_m = 0$ at $r = b$ and that $\tilde{V}_m$ is finite at $r = 0$ we get for the harmonic $m$ of the potential in the region $r_0 < r \leq b$

$$\tilde{V}_m = -4Ne\tilde{f}(k)\frac{I_m(qr_0)}{I_m(qb)}\{I_m(qr)K_m(qb) - I_m(qb)K_m(qr)\} \tag{13}$$

The surface charge density induced on the wall

$$\sigma(\theta, u) = \sum_{m=0}^{+\infty}\int \epsilon_m \tilde{\sigma}_m(k)\cos m(\theta - \theta_0)e^{jku}dk \tag{14}$$

from the Gauss law

$$\tilde{\sigma}_m = \frac{1}{4\pi}\frac{\partial \tilde{V}_m}{\partial r}\Big]_{r=b} = -\frac{Ne}{\pi b}\tilde{f}(k)\frac{I_m(qr_0)}{I_m(qb)} \tag{15}$$

The surface current density induced on the wall is

$$J_S(\theta, u) = \sum_{m=0}^{+\infty}\int \epsilon_m \tilde{J}_m(k)\cos m(\theta - \theta_0)e^{jku}dk \tag{16}$$

where

$$\tilde{J}_m = \beta c\tilde{\sigma}_m \tag{17}$$

Observe that

$$e^{jku} = e^{jk(z-vt)} = e^{j(kz-\omega t)}$$

where the angular frequency $\omega = kv$ can replace the wave number $k$. Thus there is the freedom to change all the expressions above to the frequency domain representation.

## 3. THE PLATE EQUATIONS

Scalar and longitudinal vector potentials produced over the plate are derived from the Maxwell equations, assuming that the plate is perfectly conductive [3],

$$\underline{E}_{tg} = -\frac{1}{c}\frac{\partial \underline{A}}{\partial t} - \nabla V\Big]_{tg} = 0 \tag{22}$$

$$\nabla \cdot \underline{A} + \frac{1}{c}\frac{\partial V}{\partial t} = 0 \tag{23}$$

These equations written in cylindrical coordinates in the frequency domain and $exp(-j\omega t)$ convention

$$\frac{\partial V}{\partial z} - j\frac{\omega}{c}A_z = 0 \tag{24}$$

$$\frac{1}{b}\frac{\partial V}{\partial \theta} - j\frac{\omega}{c}A_\theta = 0 \tag{25}$$

$$\frac{1}{b}\frac{\partial A_\theta}{\partial \theta} + \frac{\partial A_z}{\partial z} - j\frac{\omega}{c}V = 0 \tag{26}$$

The expansion of the potentials in even and odd harmonics gives

$$V = \sum_{m=0}^{\infty} \epsilon_m \left[\overline{V}_m \cos mg\theta + \overline{\overline{V}}_m \sin\left(\frac{2m+1}{2}g\theta\right)\right] \tag{27}$$

$$A_z = \sum_{m=0}^{\infty} \epsilon_m \left[\overline{A}_{zm} \cos mg\theta + \overline{\overline{A}}_{zm} \sin\left(\frac{2m+1}{2}g\theta\right)\right] \tag{28}$$

$$A_\theta = \sum_{m=0}^{\infty} \epsilon_m \left[\overline{A}_{\theta m} \sin mg\theta + \overline{\overline{A}}_{\theta m} \cos\left(\frac{2m+1}{2}g\theta\right)\right] \tag{29}$$

where $g = 2\pi/\varphi_0$.

Equation (26) with (24) and (25) becomes

$$\frac{\partial^2 V}{\partial z^2} + \frac{1}{b^2}\frac{\partial V^2}{\partial \theta^2} + k_0^2 V = 0 \tag{30}$$

where $k_0^2 = \omega^2/c^2$

Equation (30) can be separated, using (27-29), in the even and odd harmonics of V

$$\frac{\partial^2 \overline{V}_m}{\partial z^2} + \left[k_0^2 - \frac{m^2 g^2}{b^2}\right] \overline{V}_m = 0 \tag{31}$$

$$\frac{\partial^2 \overline{\overline{V}}_m}{\partial z^2} + \left[k_0^2 - \left(\frac{2m+1}{2}\right)^2 \frac{g^2}{b^2}\right] \overline{\overline{V}}_m = 0 \tag{32}$$

If we call

$$\overline{p}^2 = k_0^2 - \frac{m^2 g^2}{b^2} \tag{33}$$

$$\overline{\overline{p}}^2 = k_0^2 - \left(\frac{2m+1^2}{2}\right)^2 \frac{g^2}{b^2} \tag{34}$$

the solution of equations (31) and (32) is

$$\overline{V}_m = \overline{a}_m e^{-j\overline{p}z} + \overline{b}_m e^{j\overline{p}z} \tag{35}$$

from which

$$\overline{A}_{zm} = -\frac{\overline{p}}{k_0} \left\{\overline{a}_m e^{-j\overline{p}z} - \overline{b}_m e^{j\overline{p}z}\right\} \tag{36}$$

$$\overline{A}_{\theta m} = j\frac{mg}{k_0 b} \left\{\overline{a}_m e^{-j\overline{p}z} + \overline{b}_m e^{j\overline{p}z}\right\} \tag{37}$$

and

$$\overline{\overline{V}}_m = \overline{\overline{a}}_m e^{-j\overline{\overline{p}}z} + \overline{\overline{b}}_m e^{j\overline{\overline{p}}z} \tag{38}$$

from which

$$\overline{\overline{A}}_{zm} = -\frac{\overline{\overline{p}}}{k_0} \left\{\overline{\overline{a}}_m e^{-j\overline{\overline{p}}z} - \overline{\overline{b}}_m e^{j\overline{\overline{p}}z}\right\} \tag{39}$$

$$\overline{\overline{A}}_{\theta m} = -j\frac{2m+1}{2k_0 b} g \left\{\overline{\overline{a}}_m e^{-j\overline{\overline{p}}z} + \overline{\overline{b}}_m e^{j\overline{\overline{p}}z}\right\} \tag{40}$$

Equation (23) is valid in the case that charges and currents are conserved. When we suppose to have current "sources" and/or "losses" in a generic point $(z_p, \theta_p)$ on the electrode then equation (23) modifies as follows [3]

$$\nabla \cdot \underline{A} + \frac{1}{c}\frac{\partial V}{\partial t} = -Z_0 j_S(\theta_p, z_p) \tag{41}$$

where $j_S(\theta_p, z_p)$ is the current density flowing "in" or "out" at the location $(\theta_p, z_p)$ and $Z_0$ is the characteristic impedance of the transmission line formed by the plate and the surrounding.

*3.1 Boundary condition at the termination*

For an electric termination at the point $(\theta_p, z_p)$

$$j_S(\theta_p, z_p) = \frac{V_p}{Z_T}\delta(\theta - \theta_p)\delta(z - z_p) \tag{42}$$

where $V_p$ is the potential at the point and $Z_T$ the load impedance. Equation (41) with the condition (42) gives, in the frequency domain

$$\frac{\partial^2 V}{\partial z^2} + \frac{1}{b^2}\frac{\partial V^2}{\partial \theta^2} + k_0^2 V = -j\frac{\omega}{c}\frac{Z_0}{Z_T}V_p\delta(\theta - \theta_p)\delta(z - z_p) \tag{43}$$

When we use expressions (27-29) in (43)

$$\sum_m \epsilon_m \left\{ \left[ \frac{\partial^2 \overline{V}_m}{\partial z^2} + \overline{p}^2 \overline{V}_m \right] \cos mg\theta + \left[ \frac{\partial^2 \overline{\overline{V}}_m}{\partial z^2} + \overline{\overline{p}}^2 \overline{\overline{V}}_m \right] \sin\left( \frac{2m+1}{2} g\theta \right) \right\} =$$

$$= -jk_0 \frac{Z_0}{Z_T} V_p \delta(\theta - \theta_p)\delta(z - z_p) \tag{44}$$

Multiplying both sides of (44) by $\cos lg\theta$ or $\sin \frac{2l+1}{2} g\theta$ and integrating over $\theta$ in the interval $[-\varphi_0/2, \varphi_0/2]$ gives

$$\frac{\partial^2 V_m}{\partial z^2} + p^2 V_m = -jk_0 \frac{Z_0}{Z_T} V_p Q_m \delta(z - z_p) \tag{45}$$

where $V_m, p, Q_m$ can be $\overline{\bullet}$ or $\overline{\overline{\bullet}}$ and

$$\overline{Q}_m = \frac{2}{\epsilon_m \varphi_0} \cos mg\theta_p \tag{46a}$$

$$\overline{\overline{Q}}_m = \frac{2}{\epsilon_m \varphi_0} \sin \frac{2m+1}{2} g\theta_p \tag{46b}$$

Integration of both sides of (45) in the interval $z_p \pm \epsilon$ when $\epsilon \to 0$ gives

$$\left.\frac{\partial V_m}{\partial z}\right]_{z_p+} - \left.\frac{\partial V_m}{\partial z}\right]_{z_p-} = -jk_0 \frac{Z_0}{Z_T} V_p Q_m \tag{47}$$

where with (+) or (−) we point out the solution on the right and left of the point $z = z_p$.

Expression (47), when we take into account (24), becomes

$$A^+_{zm} - A^-_{zm} = -\frac{Z_0}{Z_T} V_p Q_m \tag{48}$$

The continuity of $V_m$ at $z = z_p$ gives

$$V^+_m - V^-_m = 0 \tag{49}$$

To observe that $V_p$ in eq. (44) is the total voltage at the location of the termination, given as the sum of all the harmonics $m$ and thus still an unknown.

*3.2 Boundary conditions at the ends*

We take into account the current induced by the beam letting in equation (41)

$$j_S = bJ_S \delta(z - z_0) \tag{50}$$

where $J_S$ is the surface current induced by the beam at the ends $z_0 = z_{1,2}$. In the frequency domain, taking into account eqs. (14-17),

$$\frac{\partial^2 V}{\partial z^2} + \frac{1}{b^2}\frac{\partial V^2}{\partial \theta^2} + k_0^2 V =$$

$$= -jk_0 Z_0 b \delta(z - z_0) \left[ \sum_p \epsilon_p \tilde{\sigma}_p \cos p(\theta - \theta_0) \right] e^{jkz} \tag{51}$$

If we use the expansions (27-29) in (51) the equation for the potential becomes,

$$\sum_m \epsilon_m \left\{ \left[ \frac{\partial^2 \overline{V}_m}{\partial z^2} + \overline{p}^2 \overline{V}_m \right] \cos mg\theta + \left[ \frac{\partial^2 \overline{\overline{V}}_m}{\partial z^2} + \overline{\overline{p}}^2 \overline{\overline{V}}_m \right] \sin \frac{2m+1}{2} g\theta \right\} =$$

$$= -jk_0 Z_0 b\delta(z - z_0) \left[ \sum_p \epsilon_p \tilde{\sigma}_p \cos p(\theta - \theta_0) \right] e^{jkz} \tag{52}$$

Multiplying both sides by $\cos lg\theta$ or $\sin \frac{2l+1}{2} g\theta$ and integrating over $\theta$ in the interval $[-\varphi_0/2, \varphi_0/2]$ gives

$$\frac{\partial^2 V_m}{\partial z^2} + p^2 V_m = -jk_0 b Z_0 P_m \delta(z - z_0) e^{jkz} \tag{53}$$

where $V_m, p, P_m$ can be $\overline{\bullet}$ or $\overline{\overline{\bullet}}$ and

$$P_m = \sum_p \tilde{\sigma}_p h_{pm} \tag{54}$$

with

$$\overline{h}_{pm} = \frac{\cos p\theta_0}{\epsilon_m} \left\{ sinc(p - mg)\frac{\varphi_0}{2} + sinc(p + mg)\frac{\varphi_0}{2} \right\} \tag{55}$$

$$\overline{\overline{h}}_{pm} = \frac{\sin p\theta_0}{\epsilon_m} \left\{ sinc(p - \frac{2m+1}{2}g)\frac{\varphi_0}{2} - sinc(p + \frac{2m+1}{2}g)\frac{\varphi_0}{2} \right\} \tag{56}$$

and $sinc(x) = sin(x)/x$.

Integration of both sides of (53) in the interval $z_0 \pm \epsilon$ when $\epsilon \to 0$ gives for the first end at $z = -\ell/2 = z_1$.

$$A_{zm}(z_1) = -bZ_0 P_m e^{-jk\ell/2} \tag{57}$$

and for the second end at $z = +\ell/2 = z_2$

$$A_{zm}(z_2) = bZ_0 P_m e^{+jk\ell/2} \tag{58}$$

assuming that $z = 0$ is at the center of the plate and that $\ell$ is the length.

*3.3 Determination of the potential at the termination*

Equations (48,49,57,58) written for the even and odd modes and for the two sides of the plate separated by the termination at $z = z_p$, give a system of eight equations in eight unknown quantities. The solution of this system gives in particular

$$\Delta a_m^+ = 2\frac{Z_0}{Z_T}V_p Q_m \frac{k_0}{p} e^{ip\frac{\ell}{2}} \cos p\left(\frac{\ell}{2} + z_p\right) +$$

$$+4bZ_0 P_m \frac{k_0}{p}\cos(p-k)\frac{\ell}{2} \tag{59}$$

and

$$\Delta b_m^+ = 2\frac{Z_0}{Z_T}V_p Q_m \frac{k_0}{p} e^{-ip\frac{\ell}{2}} \cos p\left(\frac{\ell}{2} + z_p\right) +$$

$$+4bZ_o P_m \frac{k_0}{p}\cos(p+k)\frac{\ell}{2} \tag{60}$$

where

$$\Delta = 4i\sin p\ell \tag{61}$$

where again symbols can be either $\overline{\bullet}$ or $\overline{\overline{\bullet}}$.

From eq. (27) the potential at the terminal is

$$V_p = \sum_{m=0}^{\infty} \epsilon_m \left[\overline{V}_m \cos mg\theta_p + \overline{\overline{V}}_m \sin\left(\frac{2m+1}{2}g\theta_p\right)\right] \tag{62}$$

Let us consider the case that $\theta_p = 0$. In this case, only the even modes give contribution to $V_p$, since

$$V_p = \sum_{m=0}^{\infty} \epsilon_m \overline{V}_m. \tag{63}$$

From (35)

$$V_p = \sum_{m=0}^{\infty} \epsilon_m \left( \overline{a}_m^+ e^{-i\overline{p}z_p} + \overline{b}_m^+ e^{i\overline{p}z_p} \right) \tag{64}$$

and with eqs. (59-61)

$$V_p = -i\frac{Z_0}{Z_T} V_p \sum_{m=0}^{\infty} \epsilon_m \overline{Q}_m \frac{k_0}{\overline{p}} \frac{\cos\overline{p}\left(\frac{\ell}{2}+z_p\right)\cos\overline{p}\left(\frac{\ell}{2}-z_p\right)}{\sin\overline{p}\ell} +$$

$$-ibZ_0 \sum_{m=0}^{\infty} \epsilon_m \overline{P}_m \frac{k_0}{\overline{p}} \frac{\left[\cos(\overline{p}-k)\frac{\ell}{2} + \cos(\overline{p}+k)\frac{\ell}{2}\right]}{\sin\overline{p}\ell} \tag{65}$$

which can be solved for $V_p$ to give, for the special case where also $z_p = 0$, that is the termination is at the center of the plate,

$$V_p = \frac{-ibZ_0 \sum_{m=0}^{\infty} \epsilon_m \overline{P}_m \frac{k_0}{\overline{p}} \frac{\cos k\ell/2}{\sin\overline{p}\ell/2}}{1 + \frac{i}{2}\frac{Z_0}{Z_T} \sum_{m=0}^{\infty} \epsilon_m \overline{Q}_m \frac{k_0}{\overline{p}} \frac{\cos\overline{p}\ell/2}{\sin\overline{p}\ell/2}} \tag{66}$$

This can also be written as

$$V_p = \tilde{I}(\omega)\tilde{Z}(\omega) \tag{67}$$

where

$$\tilde{I}(\omega) = Ne\tilde{f}(k) \tag{68}$$

is the beam induced current at the angular frequency $\omega$, and

$$\tilde{Z}(\omega) = \frac{Z_T Z_p}{Z_T + Z_p} \frac{G(r_0, \theta_0)}{D(\omega)} \tag{69}$$

is the effective plate impedance. The form factors

$$G(r_0, \theta_0) = 2\frac{\varphi_0}{\pi} \sum_{m=0}^{\infty} \frac{k_0}{\overline{p}} \frac{\cos k\ell/2}{\sin\overline{p}\ell/2} F_m \tag{70}$$

$$F_m = \frac{1}{2} \sum_s \epsilon_m \overline{h}_{sm} \frac{I_s(qr_0)}{I_s(qb)} \tag{71}$$

and

$$D(\omega) = \sum_{m=0}^{\infty} \frac{k_0}{\overline{p}} \frac{\cos \overline{p}\ell/2}{\sin \overline{p}\ell/2} \tag{72}$$

show the dependence on the beam position relative to the plate and on the geometry of the plate.

The effective impedance expressed in the form of eq. (69) shows that it can be expressed as the parallel of two impedances, one being the termination itself $Z_T$ and the other given by

$$Z_p = i\frac{Z_0}{\varphi_0} D(\omega) \tag{73}$$

With a similar method it is straightforth, though quite cumbersome, to calculate the potential $V_p$ also for the case $\theta_p \neq 0$. In this case, also the odd modes will give contribution, but eqs. (67-69) and eq. (73) remain valid. We leave to the reader the calculations of the form factors $G$ and $D$ for the more general case.

Finally it is to be observed that $V_p$ as given by eq. (67) represents the frequency response of the plate excitation. The total voltage as function of time is otherwise expressed by the Fourier integral

$$V_p(t) = \int \tilde{I}(\omega)\tilde{Z}(\omega)e^{-i\omega t} d\omega \tag{74}$$

## 4. DISCUSSION AND NUMERICAL RESULTS

A beam position monitor is made of two parallel plates. Typically the difference of the termination voltages is taken ,which is then divided by the sum in order to obtain the beam position. The electronics past the termination also has build-up cutoffs which automatically eliminate the contribution to frequencies larger than a certain value. Usually the range of frequency of interest corresponds to those wavelengths $\lambda$ satisfying simultaneously the conditions

$$\lambda >> b/\beta\gamma \tag{75}$$

$$\lambda >> \pi\ell \tag{76}$$

that is those wavelengths considerably larger than the dimension of the plates.

Inspection of (33) and (34) combined to the form factors (70-72) shows that there is clearly a cutoff in the plate response function given by $\lambda = b\varphi_0$. For the case of long wavelengths, only the mode $m = 0$ gives a significant contribution. When only this is retained, we have

$$D \approx 2c/\omega\ell \tag{77}$$

$$G \approx \varphi_0 \frac{4c}{\omega\ell\pi} F_0 \tag{78}$$

and

$$F_0 = \sum_s \left(\frac{r_0}{b}\right)^s \frac{\sin(s\varphi_0/2)}{s\varphi_0/2} \cos(s\theta_0) \tag{79}$$

Then it is seen that $Z_p$ is the impedance which corresponds to a capacity

$$Z_p = \frac{i}{\omega C_p} \tag{80}$$

$$C_p = \frac{\varphi_0 \ell}{2cZ_0} \tag{81}$$

Combining all together

$$\tilde{Z}(\omega) = \frac{2}{\pi}\varphi_0 F_0 \frac{Z_T}{1 - i\omega C_p Z_T} \tag{82}$$

Observe that the dependence on the beam position $(\theta_0, r_0)$ is given by $F_0$, eq. (79).

Thus the frequency response is equivalent to that of a low-frequency pass-band circuit with a frequency cut-off of about $\omega_c \sim 1/C_p Z_T$. For the case of a beam bunch of total length smaller than the corresponding wavelength at cut-off, the induced signal after one single bunch passage has a peak voltage in the time domain at $t = 0$

$$\hat{V} = \frac{2\varphi_0}{\pi}\frac{NeF_0}{C_p} \tag{83}$$

which then decays with the constant time $\omega_c$. Observe that according to eq. (81) and the definition of characteristic impedance $Z_0, C_p/\varphi_0$ is half the capacitance $C$ of the geometry formed by one plate and the surrounding vacuum chamber.

The sum signal which is obtained by adding the output voltage of the two plates, in the case of small beam displacement ($r_0 \to 0$), is

$$V_\Sigma = 8\frac{Ne}{\pi C} \tag{84}$$

whereas the difference of the voltage is

$$V_\Delta = 8\,\frac{Ne}{\pi C}\frac{\sin\varphi_0/2}{\varphi_0/2}\,\frac{r_0\cos\theta_0}{b} \tag{85}$$

valid in first approximation versus the displacement $r_0 \cos\theta_0$ of the beam.

The ratio $V_\Delta/V_\Sigma$ divided by the beam position gives the sensitivity of the plate system as a beam position monitor

$$S = \frac{V_\Delta}{V_\Sigma} = \frac{\sin\varphi_0/2}{b\varphi_0/2} \tag{86}$$

For the special case $\theta_0 = 0$ for one plate, that is $\theta_0 = \pi$ for the other, summation (79) has a closed form [9] which inserted in (83) yelds to

$$V_\Sigma = 8\,\frac{Ne}{\pi C}\left[1 + \frac{1}{\varphi_0} arctg \frac{\left(\frac{r_0}{b}\right)^2 \sin\varphi_0}{1 - \left(\frac{r_0}{b}\right)^2 \cos\varphi_0}\right] \tag{87}$$

and

$$V_\Delta = 8\,\frac{Ne}{\pi C}\frac{1}{\varphi_0} arctg \frac{2\frac{r_0}{b}\sin\frac{\varphi_0}{2}}{1 - \left(\frac{r_0}{b}\right)^2} \tag{88}$$

which are valid for any value of $r_0/b$ between zero and 1.

Figures 2, 3 and 4 show the behavior of $V_\Sigma$, $V_\Delta$ and their ratio according to eqs. (87 and 88) versus $r_0/b$ for different widths $\varphi_0$ of the plates.

## 5. *CONCLUSIONS*

An exact solution for the problem of one plate working as beam position detector in an accelerator pipe is depicted in this paper. The azimuthal variation of the field is added in this work giving the complete description of the field. Examining the results the following comments are in order:

a) in the low frequency range the response of a single plate is equivalent to that of a pure capacitance in agreement with the general understanding;

b) increasing the frequency the output voltage became reactive and abrupt decrease;

c) for the two electrodes systems the coupling between the plate is neglected, a more rigorous analysis must take into account this effect that increase with the frequency;

d) with little adjustments the proposed method is useful in the solution of other similar problems like line pick-ups and other devices of this type.

*REFERENCES*


[1] T. Linnecar "The High Frequency Longitudinal and Transverse Pick-Ups Used in the SPS", CERN-SPS/ARF/78-17.

[2] R.E. Shafer, R.C. Webber, and T.H. Nicol, "Fermilab Energy Doubler Beam Position Detector", IEEE Trans. on Nucl. Sci., NS-28, No. 3, p. 2290-2292, 1981.

[3] L.J. Laslett, "Concerning the Self Field of a Beam Oscillating Transversally in the Presence of Clearing Electrode Plates", Proc. of the Int. Symp. on Elect. Posit. Storage Rings, Orsay, 1966.

[4] A. Sessler, and V. Vaccaro, "Longitudinal Instab.", CERN 67-2 ISR (67).

[5] A.G. Ruggiero, P. Strolin, and V.G. Vaccaro, "Instabilities of an Intense Coasting Beam..." ISR-RF-TH/69-7 CERN (69).

[6] A.G. Ruggiero, and V.G. Vaccaro, "The Electromagnetic Field of an Intense Coasting..." LNF 69/79 (69).

[7] A.G. Ruggiero, and V.G. Vaccaro, "The Wake Field of an Oscillating Particle..." LNF 69/80 (69).

[8] A.G. Ruggiero, $\overline{p}$ note 148 Fermilab (81); $\overline{p}$ note 199 Fermilab (82); $\overline{p}$ note 320 Fermilab (83); and $\overline{p}$ note 319 Fermilab (83).

[9] I.S. Gradshteyn, I.M. Ryzhik,"Table of Integrals Series and Products", Academic Press, New York, 1965.

*CAPTION OF FIGURES*

1 Geometry of the problem.

2 The sum signal $V_\Sigma$ divided by $V_0 = 4Ne/C$ versus beam displacement $r_0/b$, for $\theta_0 = 0$, and for different plate width $\varphi_0$.

3 The difference signal $V_\Delta$ divided by $V_0 = 4Ne/C$ versus beam displacement $r_0/b$, for $\theta_0 = 0$, and for different plate width $\varphi_0$.

4 The ratio $V_\Delta/V_\Sigma$ versus beam displacement $r_0/b$, for $\theta_0 = 0$, and for different plate width $\varphi_0$.

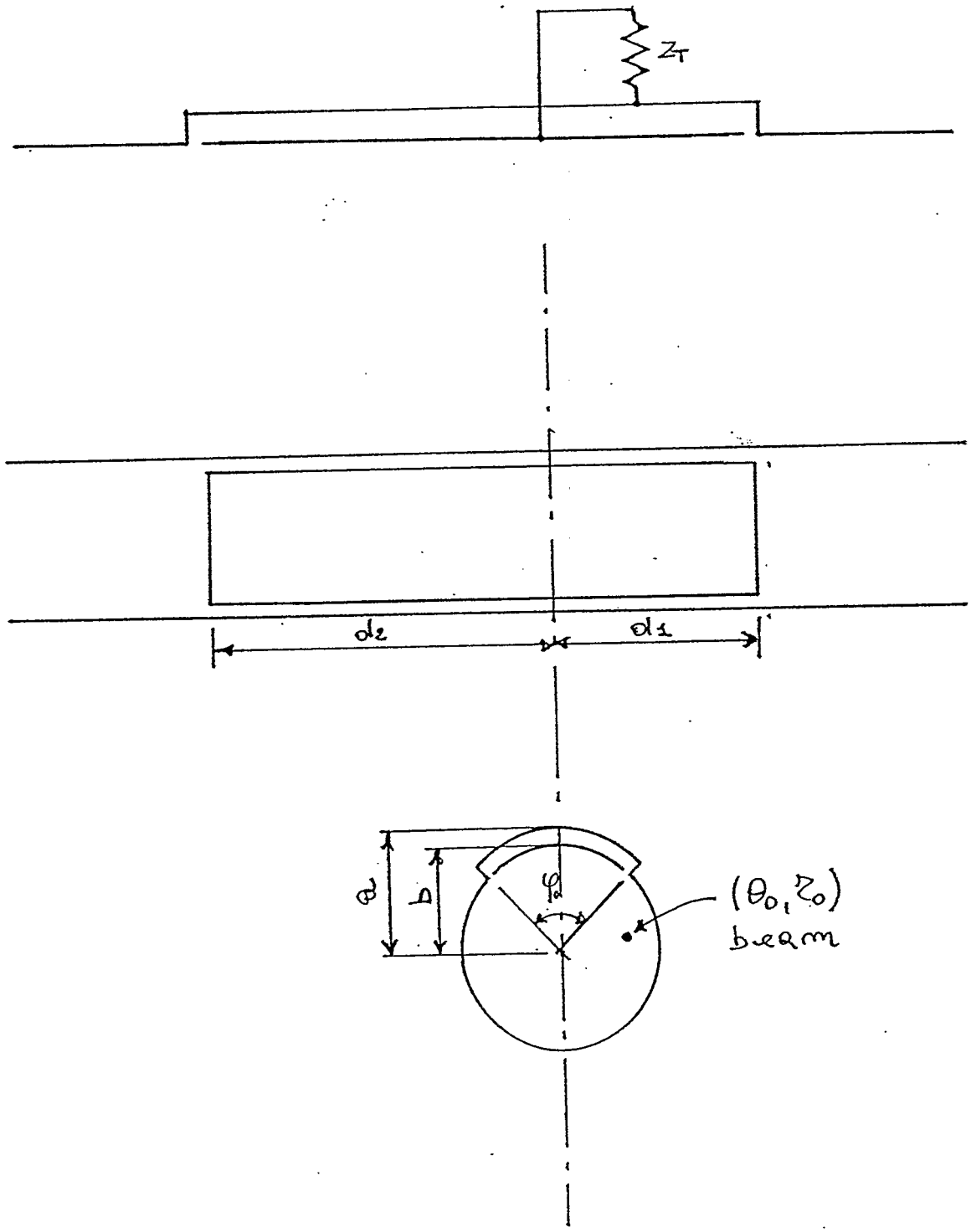


Fig. 1

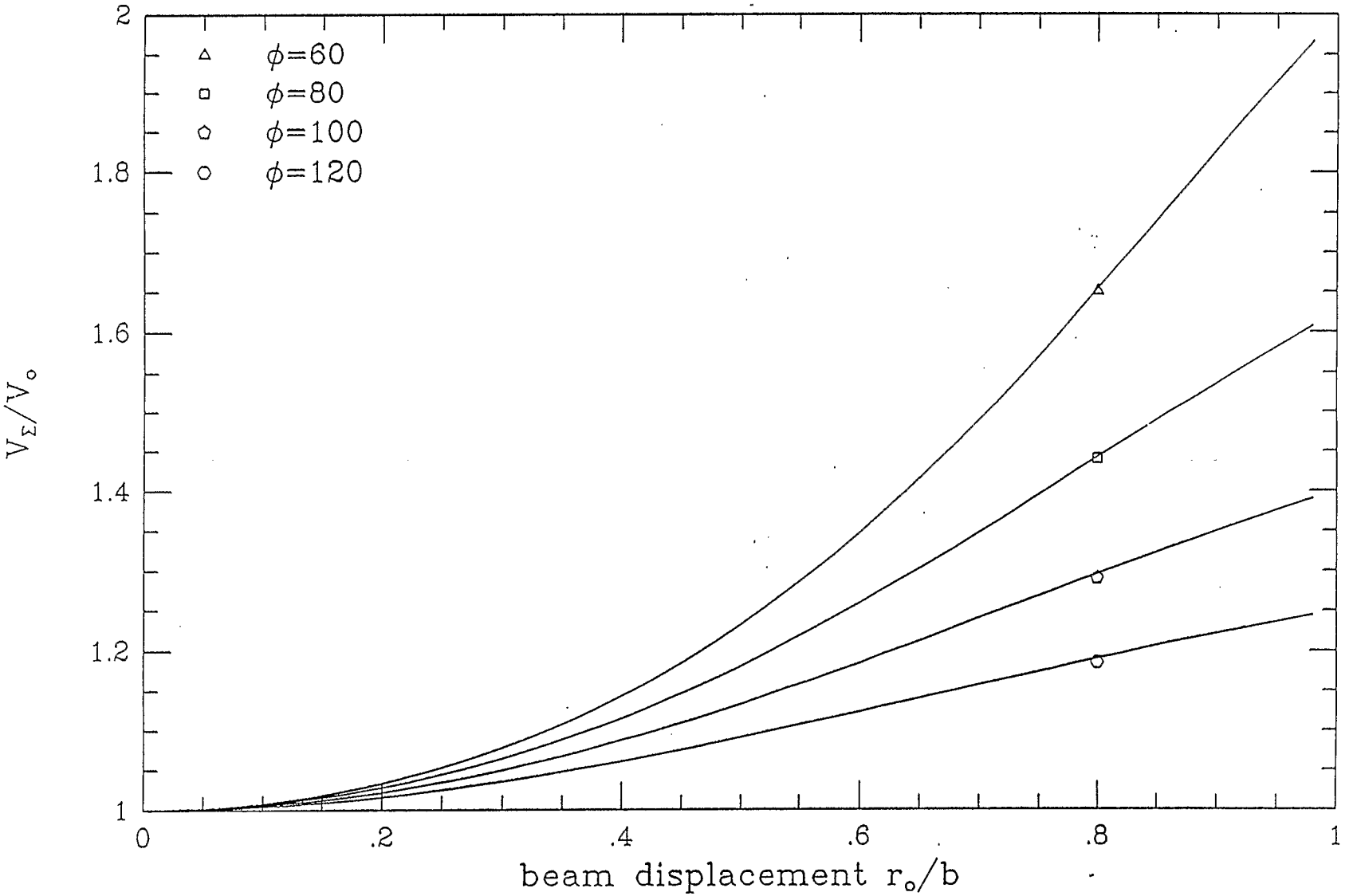
$\phi$=60
$\phi$=80
$\phi$=100
$\phi$=120
2
1.8
1.6
1.4
1.2
1
0
.2
.4
.6
.8
1
$V_\Sigma/V_o$
beam displacement $r_o/b$

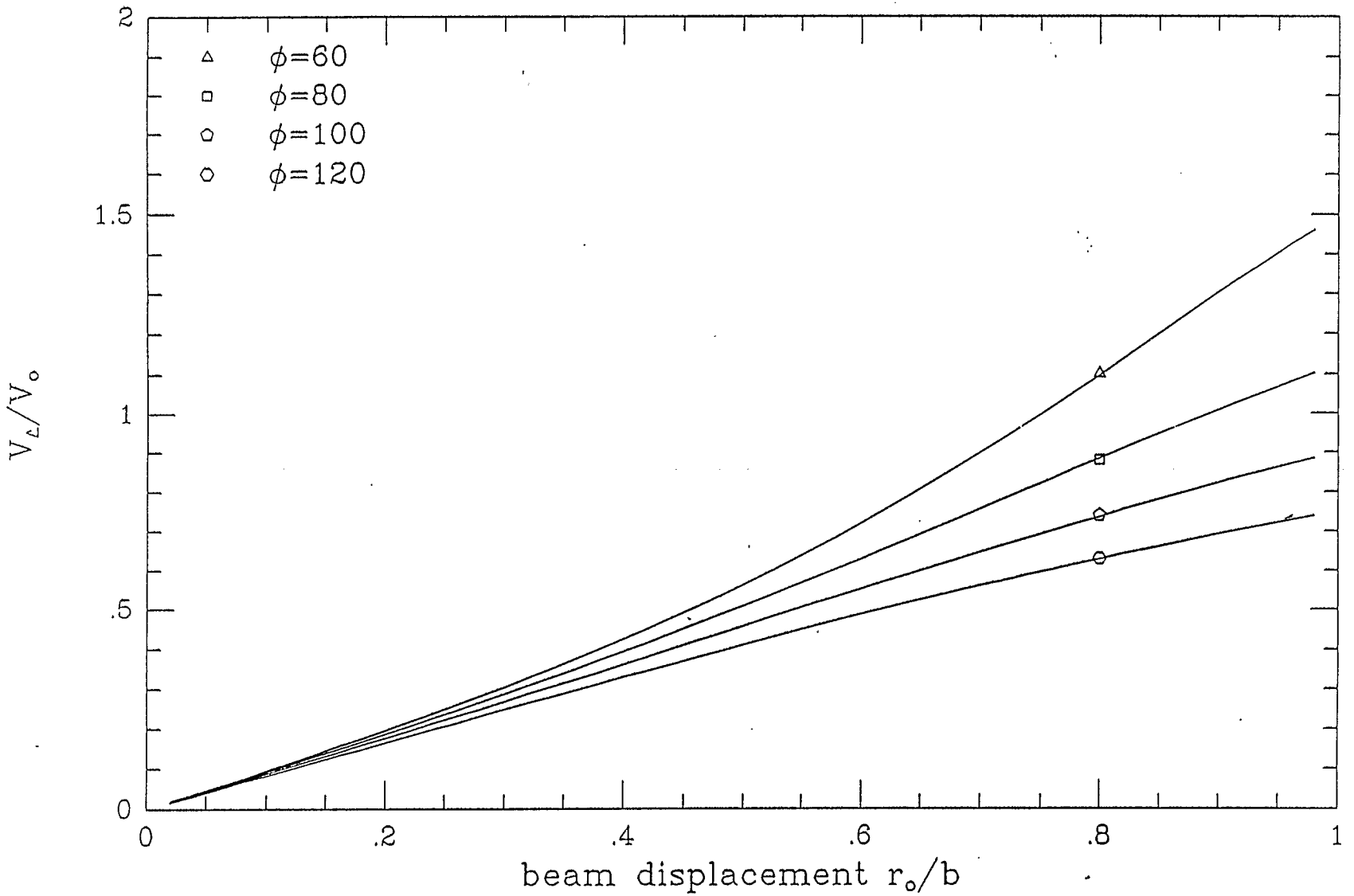
$\phi$=60
$\phi$=80
$\phi$=100
$\phi$=120
2
1.5
1
.5
0
0
.2
.4
.6
.8
1
$V_L/V_o$
beam displacement $r_o/b$

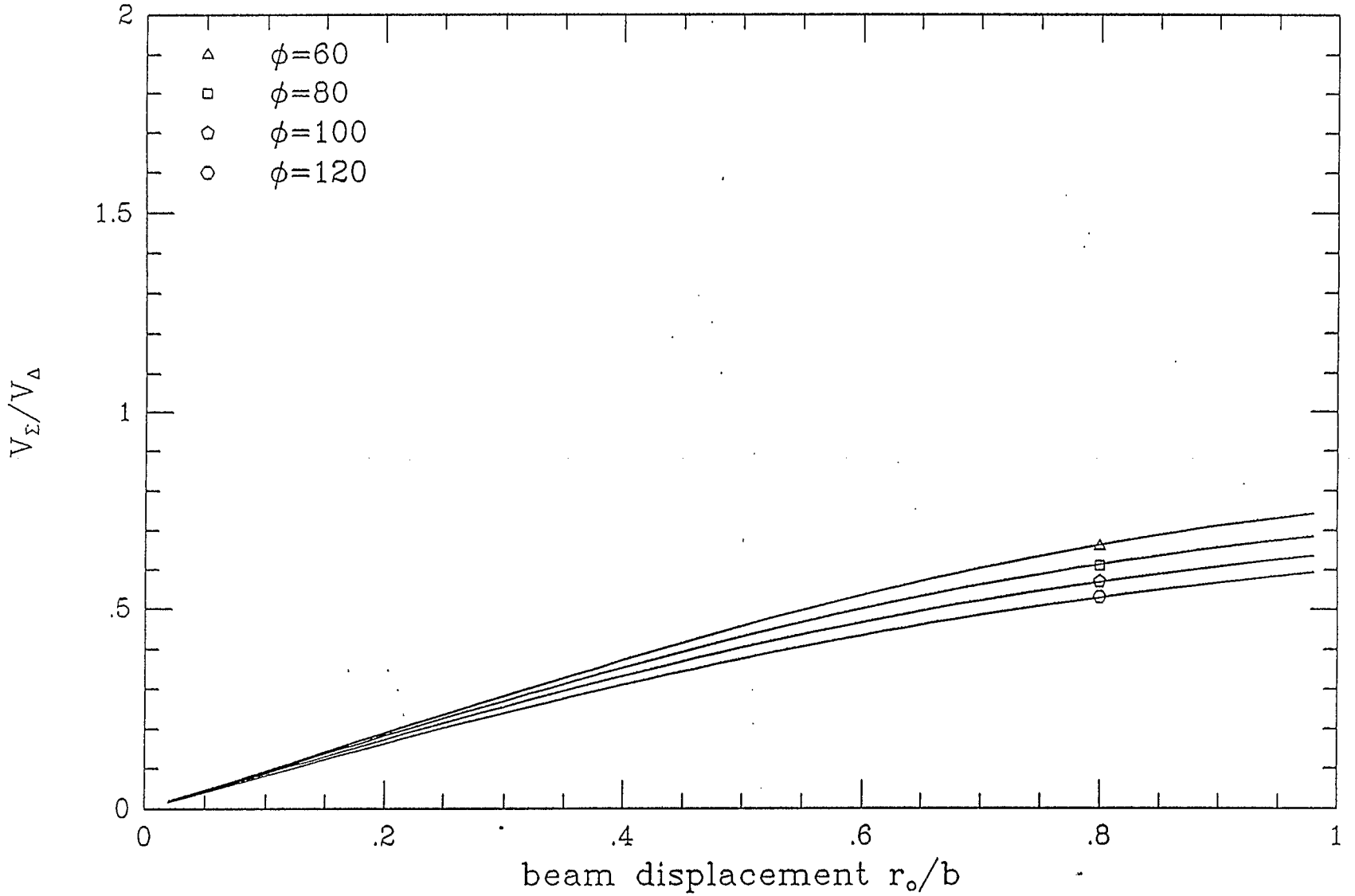
$\phi$=60
$\phi$=80
$\phi$=100
$\phi$=120
2
1.5
1
.5
0
0
.2
.4
.6
.8
1
$V_\Sigma/V_\Delta$
beam displacement $r_o/b$