ADD - AP TN 2
May 1987

Network & Communications

Compiled
by

ZOHREH PARSA

BROOKHAVEN NATIONAL LABORATORY
ACCELERATOR DEVELOPMENT DEPARTMENT

ZOHREH PARSA
Accelerator Development Department
Brookhaven National LAboratory
Upton, New York 11973

I. Introduction

This overview provides some information on Networking and Communication at Brookhaven National Laboratory. It is a collection of information from Users, Manuals, and Help files. This is edited for the proceedings of the Uton LUG (Local Users Group), Detailed informations should be made available by the networking group at the Applied Math Department. Our speciall thanks to R. Imossi for providing the information on "BNLDAG Networks", and D. Stampf for information on KERMIT.

Section ii, gives an overview of the facilities, and section iii describes the "BNLDAG Network". Informations on the Bnlcluster is given in section iv , "IBM 3090" in section v, PC file transfer in section vi. and UNIX VAX in section vii.

ii) OVERVIEW OF BNL - COMPUTER FACILITIES

Following shows the link between the major facilities available at Brookhaven National Laboratory. These includes the NSLS computing facility, the Central Scientific Computing facility (AMD) and the AGS Computing Facility (see sec. ii), etc.

BROOKHAVEN NATIONAL LABORATORY

- VMS to VMS DECNET
- VMS to UNIX TCP/IP or UUCP
- UNIX to UNIX TCP/IP or UUCP

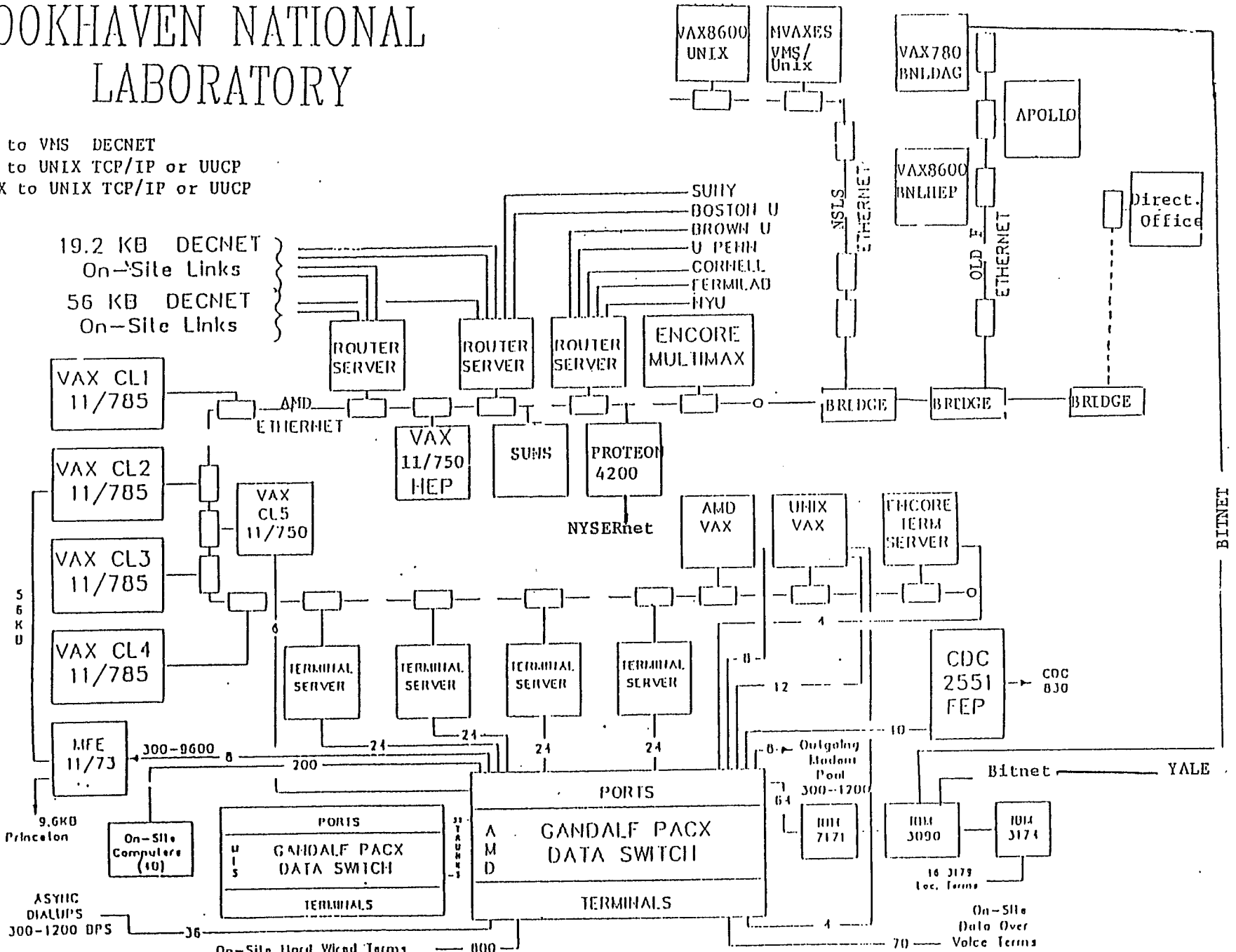

CENTRAL SCIENTIFIC COMPUTING FACILITY

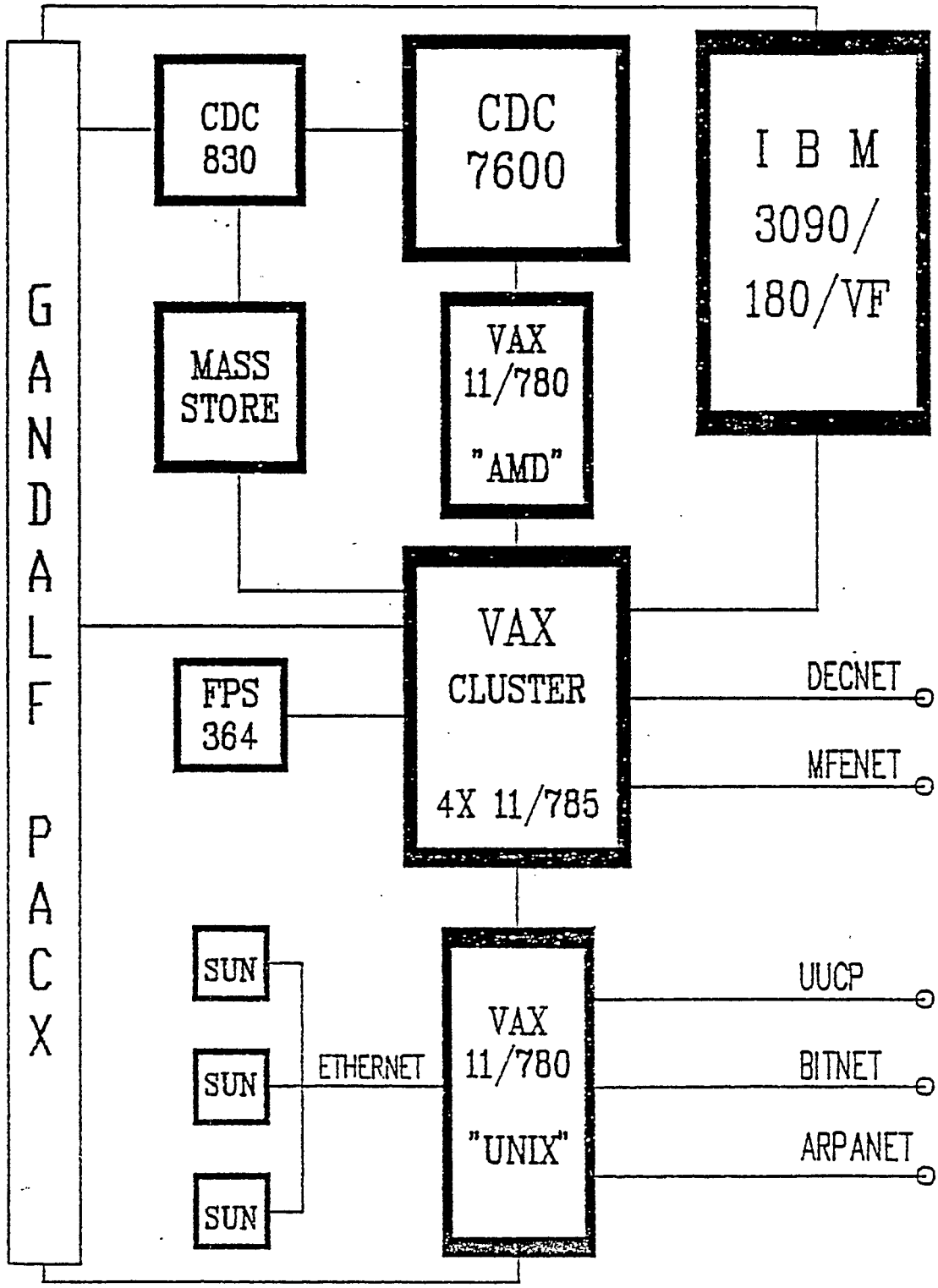

SECTION ii

I. Networks Introduction:

There are four major world-wide networks:

TCP-IP
BITNET
DECnet
and
UUCP

1. TCP-IP: Internet, Arpanet, Milnet, Nysernet, NSFnet, CSNET, X25net, EDVNET. Also there are programs that use TCP-IP such as TELNET, FTP, etc.

2. Bitnet: RSCS, VNET, Netnorth, EARNnet, JNET, KNET.

3. DECnet: Hepnet, Physnet, Span, CCNET.

4. UUCP: Usenet.

II. Network Capabilities:

There are many network capabilities such as task to task communication, remote job submittal, record level access, etc., however, the main functions are file transfer, mail, and remote login. Remember even though your computer may be connected to a particular network, it may have only one of the possible network functions. This is true of many networks only mail is possible.

III. BNLDAG Network Capabilities.

The BNLDAG VAX is directly connected to all networks except UUCP which is a Unix specific network, however, even UUCP is indirectly accessible through a gateway - (see GMAIL).

IV. BNLDAG Network commands:

Nodes	remote login	file transfer	mail *
DECnet	$ SET HOST node	$ COPY ...	$ MAIL — — —
Bitnet	not available	$ SEND/FILE **	$ MAIL > SEND To:BITNET%"..."

TCP-IP	$ TELENET node	$ FTP node	$ MAIL > SEND To:EXOS%"..."
UUCP	not available	not available	$ GMAIL > SEND To: ...UUCP

...=username@node, e.g. parsa@bnlcl1

* Note: It is recommended that GMAIL be used for all network mailing instead of mail.

** Note: BITNET can transfer only one way, out.

V. GMAIL:

GMAIL (Gateway Mail) is an intelligent mailing program on VAX computers. It's equivalent on IBM computers is SENDGATE. GMAIL is patterned closely after VMS MAIL, but it takes the worry and confusion away from a user on how and what network to use when sending mail to a friend on a remote computer. All four major networks are handled. For example:

```
$ GMAIL
> HELP                    ! get help in general
> HELP GATEWAYS           ! get help on gateways
> SEND
To username@node.uucp     ! UUCP mode
    ........
> SEND
To username@node.mil      ! Milnet mode
    ........
> SEND
To BNLCL1::username       ! DECnet mode
    ........
> SEND
To user@BNLMVA.BITNET     ! BNL IBM 3090
```

VI. References:

1) DECnet:

VMS Mail Utility manual
VMS Phone Utility manual
VMS DCL Dictionary

Interactive help:

```
$ HELP COPY
$ HELP MAIL
$ HELP SET HOST
```

$ HELP PHONE

2) Bitnet:

BNLDAG::BNL$MANUAL:BITNET.MAN
BNLDAG::BNL$MANUAL:GMAIL.MAN
JNET Users Guide

Interactive help:

$ HELP SEND
$ HELP RECEIVE

3) TCP-IP:

BNLDAG::BNL$MANUAL:INTERNET.MAN
EXOS TCP/IP Network Software Reference Manual

4) UUCP:

See the section on Unix-Vax

VII. Labnode - Network Table:

Lab Nodes		Network			
node	type	DECnet	Bitnet	TCP-IP	UUCP
BNLCL1	VAXVMS	X		X	
BNLCL2	VAXVMS	X		X	
BNLCL3	VAXVMS	X		X	
BNLCL4	VAXVMS	X		X	
BNLDAG	VAXVMS	X	X	X	
all other lab VAXes		X			
BNLVMA	IBM 3090		X	X	
BNL-GW	VAX/UNIX		X	X	X
BNL-APPOLLO	Appollo node			X	
SUN work stations				X	X

Section iv

BNLCluster Network

Protocol	Node	Remote Login	File Transfer	Mail
DECnet	All	SET HOST node	COPY	Mail
TCP/IP	All	TELENET node	FTP node	Mail >SEND TO:EXOS%"User@node"
MFEnet	BNLCL2	Yes	Yes	Yes
Kermit	All	No	Yes	No?
Bitnet	None	-	-	-

For example, to send a message to BNL (UNIX VAX) node to username PARSA

```
$ MAIL
  MAIL> SEND
  TO:   EXOS%"PARSA@BNL"
  SUBJ: ......

  ............
  ........
  ctrl Z      (to end)
or ctrl C     (to cancel)
```

More detailed information is given in section iii, (BNLDAG) that may be used.

SECTION v

COMMUNICATION TO AND FROM IBM 3090

COMMUNICATIONS

1.BITNET This is now available on the IBM. The node to use is BNLVMA.

2.TCPIP is the protocol between the VAX CLUSTER and the IBM. It can transfer files in both directions. There are on-line HELP files available under HELP FTP or HELP TELNET. In all cases enter LOCAL_FILE in the form FILENAME.EXT. To use it:

VAX → IBM

LOG onto VAX CLUSTER (any node)

FTP BNLVMA↵

ftp> It will ask you to LOG onto the IBM

—

—

SEND LOCAL_FILENAME REMOTE_FILENAME

—

—

ftp>QUIT↵ to leave FTP

DO NOT DO *cntrl*Y OR YOU WILL BE LEFT LOGGED ONTO THE IBM

If you do you must call the computer operators and ask them to

FORCE you out of the IBM.

IBM → VAX

FTP BNLCL1(2,3,4)↵

it will ask you to log onto the CLUSTER

ftp:

PUT LOCAL_FILE <REMOTE_FILE>↩

ftp:

QUIT↩

SECTION vi

PC FILE TRANSFER

There are several ways of file transfer to and from Pcs and main frames, (e.g. IBM-PCs to (and from) VAXes). One of the commonly used programs is the IBM-Pc-Intercome (ic) program (which emulates the PC to a VT100 terminal), and another is the program KERMIT.

EXAMPLES:

I. FILE TRANSFER VIA INTERCOME (Version 3.+, some of the keys differ in older versions)

1. Use "ic"
2. Login
3. Press F9 {om PC, to get the MENUE}
4. Press F10 {twice and turn on the GANDALF}

5. Login to the Main Frame (e.g. VAX)

6. Press F9 {om PC, to get the MENUE} then
   Press F5 {file function key} and then
   Press F2 {start collecting text, key}
   or Press F3 {for appending text to an existing file}

7. Press F10 {on PC twice}' to get back to the HOST computer (e.g. VAX) and give commands, e. g. $ type VAXfilename (you want to transfer).
8. Press F9 {on PC to get back the MENUE} then
   Press F5 {file function, key} and then
   Press F6 {save collected text, key}

9. Press F10 {on PC twice}, to get back to the HOST computer to logout, if the transfer is completed, or continue with other works.

II. File transfer via KERMIT

Kermit is the name of a communications protocol that allows files to be transferred between two computers. It's primary use is to transfer files between a microcomputer such as an IBM PC and a larger multiuser system. Other protocols are usually preferable for other situations.

This protocol is capable of transferring binary as well as text files and does so in an error free fashion. A typical session is shown below where files are transferred between an IBM PC and the Ultrix Vax. The usage is quite similar for other computer types.

In the following, my annotation is preceded by a semi-colon. The computer output has been mapped to upper-case, the user input is shown in lower case.

```
A> kermit                  ; A version of this protocol is available from
                           ; the cscf for the pc.  It is run by typing
                           ; kermit.

CUCCA IBM-PC KERMIT-86 VERSION 1.20
KERMIT-86> set port com1          ; Pick com1/2 on the PC - whichever
                                  ; is connected to a modem or gandalf
                                  ; switch

KERMIT-86> set baud 9600          ; Modify as appropriate.
KERMIT-86> connect
[CONNECTING TO HOST, TYPE CONTROL-]C TO RETURN TO THE PC
BAUD RATE IS 9600, CONNECTING OVER PORT COM1]
                                  ; This program is now behaving as a
                                  ; simple terminal emulator.  Toggle
                                  ; the gandalf switch, or turn on your
                                  ; modem.  This assumes a gandalf.


ENTER CLASS 76                    ; Ultrix Vax
CLASS START

ULTRIX-32 V1.2 (BNL) LOGIN AS HELP TO REGISTER

LOGIN: drs
PASSWORD:

                                  ; The message of the day appears

BNLVAX<1> kermit                  ; Same name on the vax.
C-KERMIT, 4C (057) 31 JUL 86, 4.2BSD
TYPE ? FOR HELP
C-KERMIT> send utilh.c            ; We decide to send a file from the
                                  ; Vax to the PC.  If you wait a few
                                  ; seconds, you will see some gibberish
                                  ; on the screen as the program on the
```

```
                                ; VAX tries to "shake hands" with the
                                ; PC program.

ctrl-]C                         ; Back the the PC
KERMIT-86> rec                  ; and tell it to receive a file.  It
                                ; will have the same name as the VAX
                                ; file and will be place in the
                                ; default directory.  A bell will ring
                                ; when the transfer is complete.

KERMIT-86> conn                 ; re-connect to the VAX
C-KERMIT> set file type binary  ; Prepare to transfer a binary file
C-KERMIT> rec                   ; now receiving a file.

ctrl-]C                         ; Back to the PC
KERMIT-86> send command.com     ; As an example...
                                ; Again, a bell will ring when complete.
KERMIT-86> conn                 ; Back to the VAX
C-KERMIT> exit
BNLVAX<2> logout

ctrl-]C                         ; Back the the micro

KERMIT-86> exit

A>
```

That is all there is to it. Remember that kermit is a communications protocol and not a program. The kermit programs that exist are all different and have been written by different people at different times. None of them are exactly like any other, and not all offer the same features. (I have known one or two that offered no features including file transfer!) Also, none of them was written at BNL. Still every implementation should be able to communicate with every other versions.

SECTION vii

I. Communication on UNIX (BNL node)

This section provides some information on the UNIX mail. including examples and useful commands.

1. netexec will execute a command on the specified networked system, for example bnldag.

   Either netexec bnldag 'show users'
   or netexec bnldag show users will work.
   netexec bnldag 'show time' gives the time.

2. netwrite will let you write on a user's terminal on a networked system.

3. query lets you know whether the connection to bnldag is up, just type

   q sy

4. vlpr and tlpr appear to route print files, via uux, to the VAX cluster print queues for the versatec and talaris printers, respectively.

In order to send mail to someone on the cluster, use:

mail USERNAME@bnl-cl1.ARPA

For example

mail ZOHREH@bnl-cl1.ARPA

We thank R. Thomas and others for information on Unix.