AD/RHIC/RD–31

RHIC PROJECT

Brookhaven National Laboratory

Quench Behavior of MAGCOOL Cryogenic System with an Inline Cold Surge Tank

K. C. Wu

November 1991

ABSTRACT

Quench behavior of the MAGCOOL cryogenic system, with an inline cold surge tank, during quenches of RHIC 009 have been investigated for 6700 ampere and 5000 ampere currents. The cold surge tank is used as a buffer volume to reduce the pressure rise rate and the peak pressure during the magnet quench. The peak pressure, occurring approximately 2 minutes after quench, is 13 atm for a 6700 ampere quench and 10 atm for a 5000 ampere quench. These results suggest the peak pressure due to quench of **one dipole in RHIC** will be less than the present cases since the liquid helium volume in RHIC is much larger than the surge tank volume. The design pressure is 20 atm for RHIC magnet and associated piping, therefore it is not necessary to open the vent valve for pressure relief during quench of **one** magnet.

INTRODUCTION

Thermal behavior of the MAGCOOL cryogenic system during quenches of RHIC dipole DRD009 was first investigated in September, 1991. The results were reported in Tech. Note AD/RHIC/RD-29. During this initial investigation, the cold surge tank is used for cooling loop pressure control and is maintained at a pressure lower than the loop pressure. When the loop pressure exceeds the set value, helium will be vented from the loop into the surge tank and subsequently drained back to the low pressure return of the refrigerator for cooling recovery.

In a continuing effort to understand quench characteristics for RHIC, the cold surge tank is connected to the return piping of the circulating loop to simulate neighboring magnets. The surge tank is maintained at the same pressure as the helium loop. During a quench, the tank helps absorb the loop pressure and energy.

SYSTEM DESCRIPTION

The flow schematic for the test and measure operation of the MAGCOOL cold box is given in Fig. 1. This cold box is connected to the 1500 watt MAGCOOL refrigerator. The precooler and subcooler pots are liquid helium vessels containing a heat exchanger coil inside. An ejector is used to keep the pressure and temperature in the subcooler helium pot lower than that in the precooler helium pot. A circulating compressor is used to circulate supercritical helium and deliver cooling from the helium pots to the magnet.

A 900 liter surge tank, located on the magnet return side of the cold box, is connected to the return header with inlet valve 38 open. Valve 35 is used to vent helium to the low pressure return line should the pressure exceeds the 15 atm set value. In the present study, valve 35 is always closed and no helium has been vented out of the loop since the peak pressure never exceed the set value. The valve 16 provides high pressure helium as makeup into the loop for magnet lead flow.

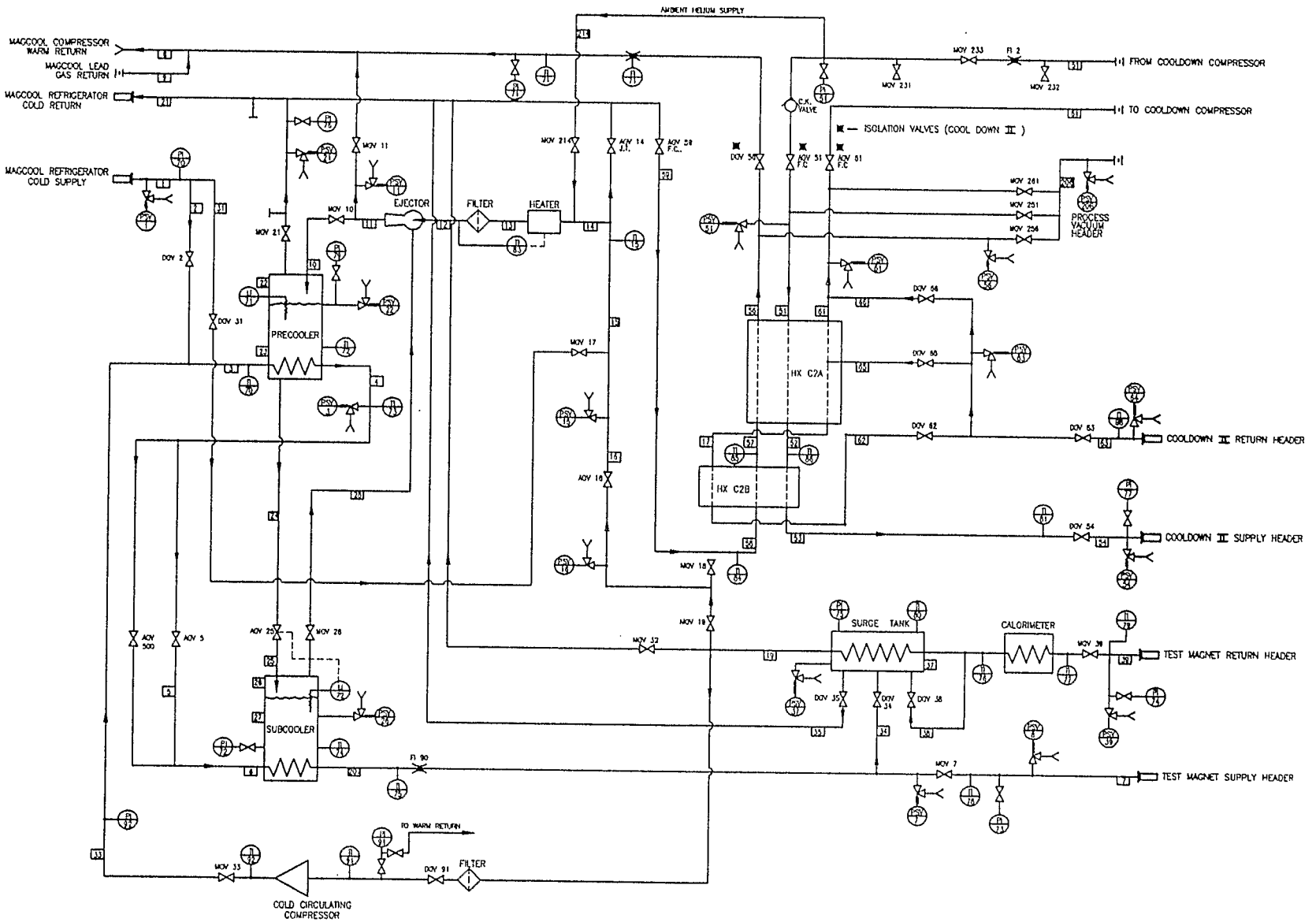

Fig. 1 MAGCOOL - test and measure flow schematic

The RHIC 009 dipole is installed in bay D of the MAGCOOL stand. A lead pot and a return can are installed at each end of the magnet to connect electrical wiring, cryogenic piping and room temperature instrumentation. Cold helium flows from the MAGCOOL supply header through the lead pot can, the 4.5 K line inside the magnet cryostat, the return can, the magnet, the lead pot can and back to the MAGCOOL return header as shown in Fig.2. The volume for the circulating loop piping is approximately 210 liter. Fig. 2 also shows the locations of dual temperature sensors at inlet to and the outlet from the RHIC magnet and at the outlet from the lead pot.

Fig. 3 shows the system flow diagram and the process controller on the computer console. Pressure in atm, flow rate in g/s and speed in rpm are readily available. The temperatures shown without units are in Kelvin. In Fig. 3, the cooldown II heat exchanger is used in the MAGCOOL operation to cool the magnet from 80 K to 10 K and will not be considered in the present study.

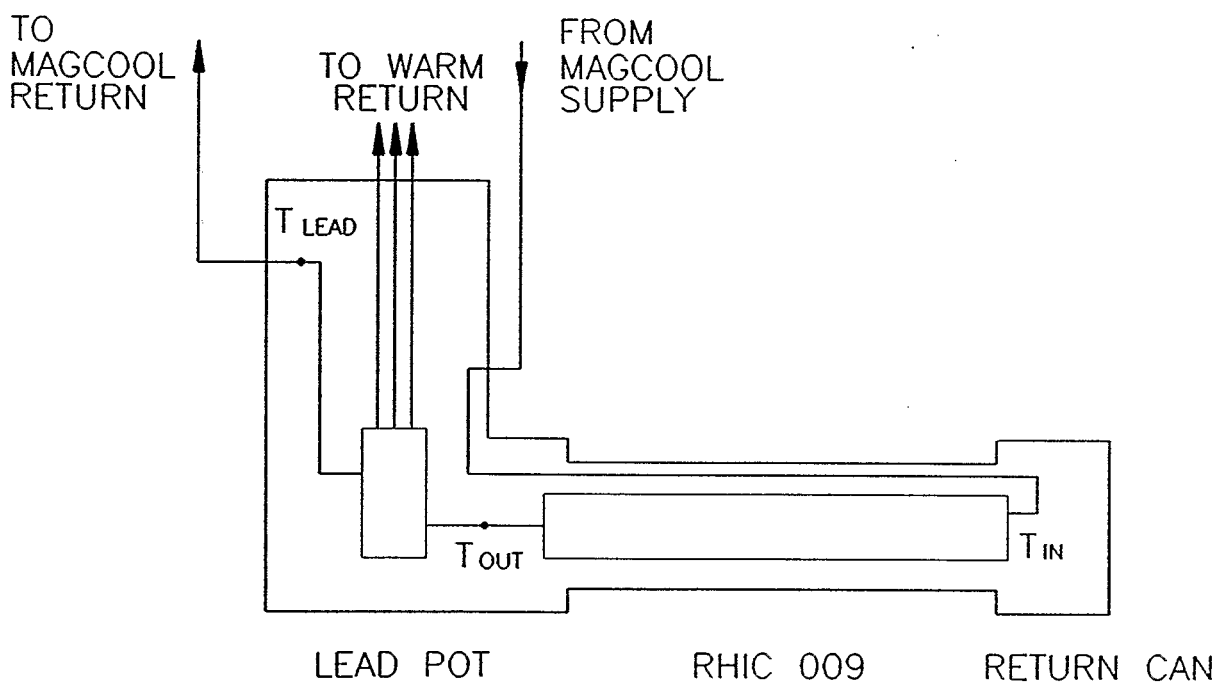

Fig. 2 Locations of temperature sensors on RHIC 009

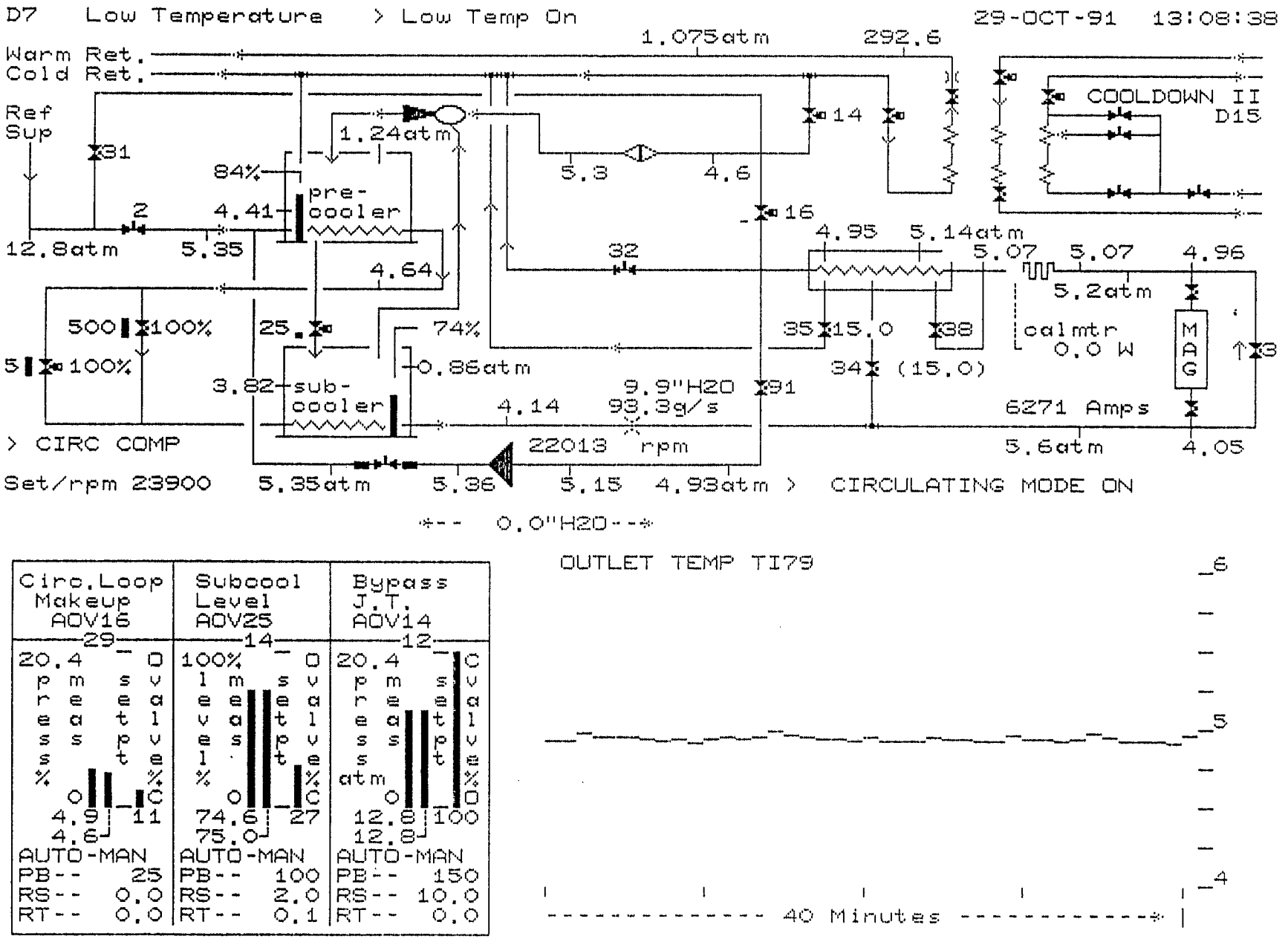

Fig. 3 MAGCOOL - test and measure flow schematic and process controllers

QUENCH BEHAVIOR

The quench behavior of the MAGCOOL system during quenches of RHIC009 have been investigated for 6700 ampere and 5000 ampere quenches.

The loop pressure as a function of time is given in Fig. 4a and 4b. Initially the pressure increases as heat is being introduced from the magnet into the helium stream. As the system is cooled back down, the pressure decreases . The change in pressure is very smooth due to the large liquid helium volume. The peak pressure is 13 atm for 6700 ampere quench and 10 atm for 5000 ampere quench. In both cases, the peak pressure occurs approximately two minutes after magnet quenched. Perturbations caused from opening of make up valve 16 can be seen from Fig. 4a.

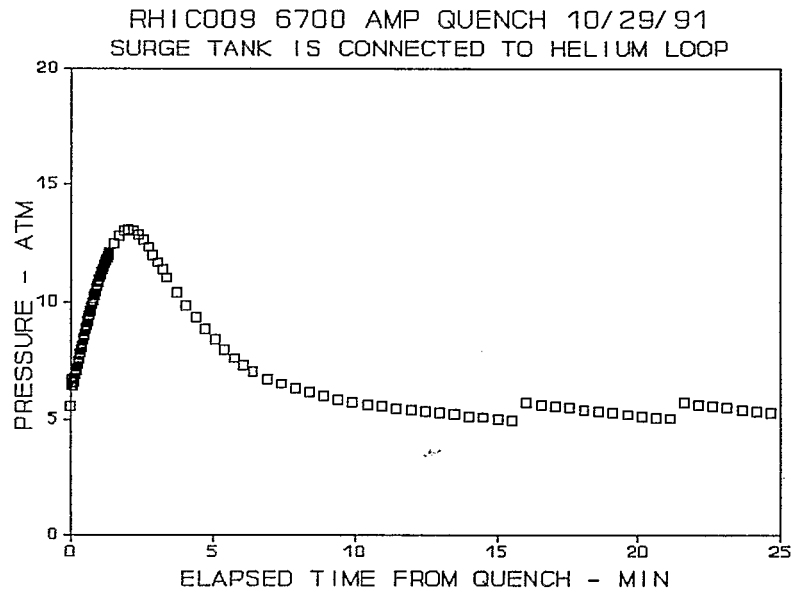

Fig. 4a Loop pressure for 6700 ampere quench

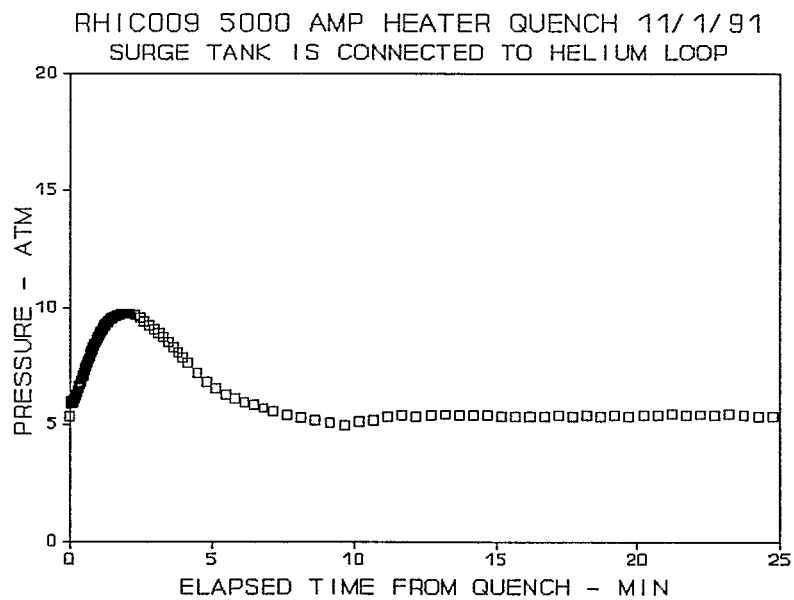

Fig. 4b Loop pressure for 5000 ampere quench

The temperatures at the inlet and outlet of the magnet, the lead pot, the return header and the surge tank for 6700 ampere and 5000 ampere quenches are shown in Fig. 5a and 5b. As can be seen, the inlet temperature varies only by a small amount during the entire recovery period because it is stabilized by the large liquid inventory in the precooler and subcooler helium pots. The surge tank temperature also varies by a small amount due to its large volume. The peak temperature in the surge tank occurs at the same time as the peak pressure. The mechanism of the surge tank is explained in the next section of this Tech. Note.

For the 6700 ampere quench, the 13.5 K peak magnet outlet temperature is observed 1.4 min. after the quench. The peak temperature at the lead pot, 12.1 K, occurs 1.7 min. after quench. The peak temperature at the return header, 12.5 K, occurs 2.9 min. after the quench. The peak tank temperature, 5.8 K, occurs 2.2 min. after the quench. For the 5000 ampere quench, the peak temperatures at the magnet outlet, the lead pot, the return header and the surge tank are 10, 8.9, 8.9 and 5.4 K occurring at 1.3, 2.0, 3.5 and 2.2 min. after quench.

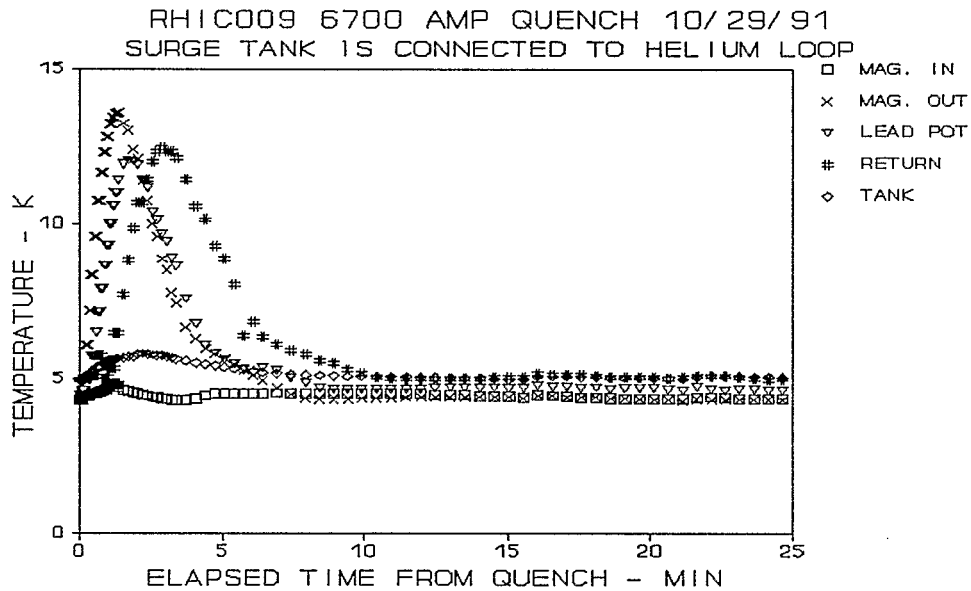

Fig. 5a Loop temperatures for 6700 ampere quench

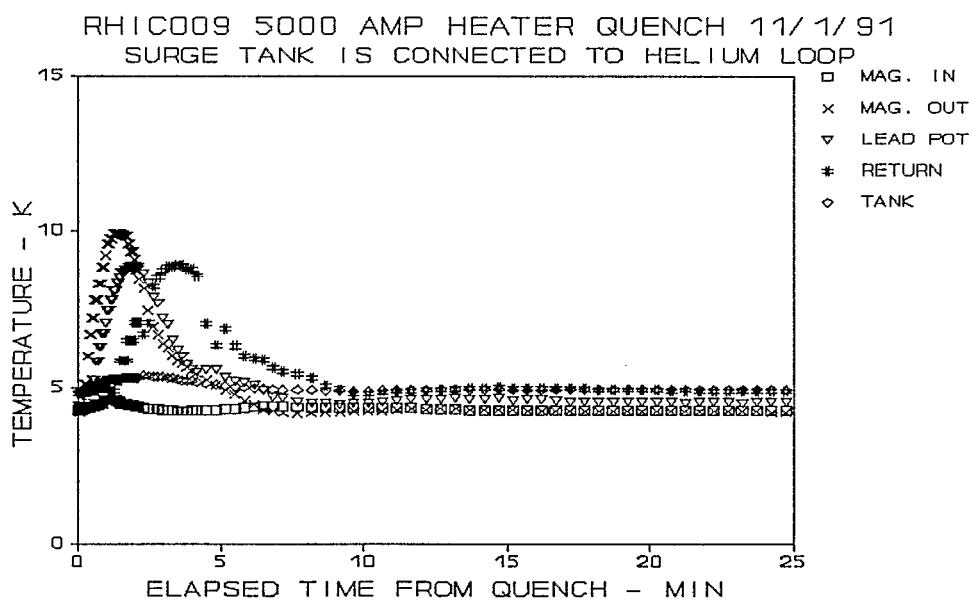

Fig. 5b Loop temperatures for 5000 ampere quench

The helium flow through the magnet as a function of time is given in Fig. 6a and 6b. The mass flow rate increases slightly after quench. As the return starts to see high temperatures, the flow rate decreases. The flow rate recovers after the peak temperature passes through the circulating compressor. About 10 minutes after quench, the flow rate returns to its initial value.

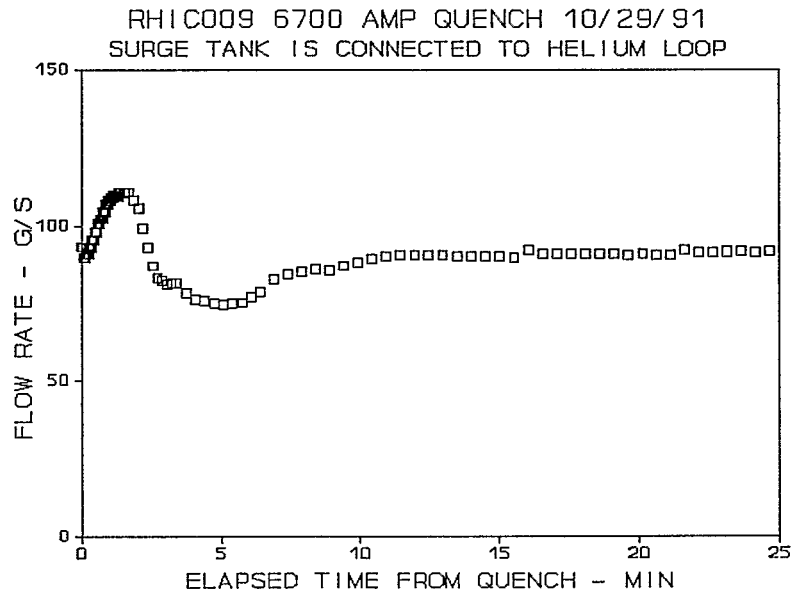

Fig. 6a Mass flow rate for 6700 ampere quench

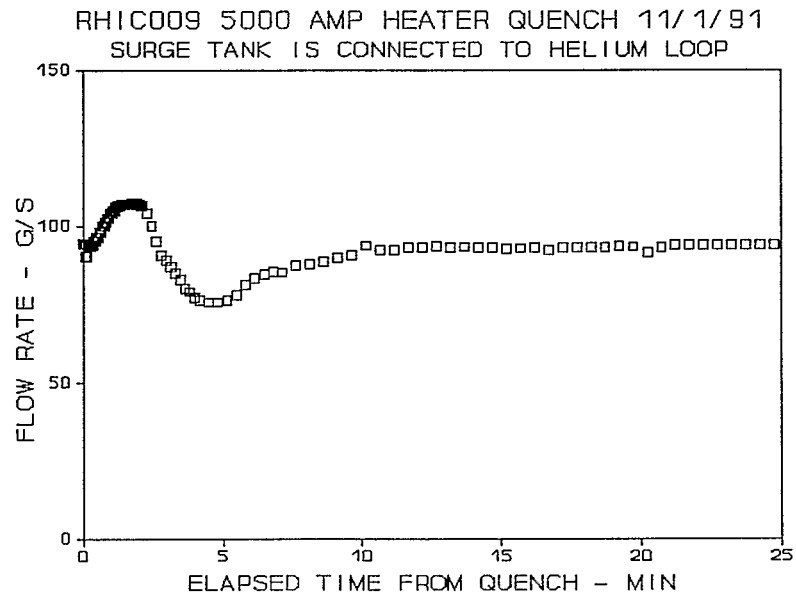

Fig. 6b Mass flow rate for 5000 ampere quench

The liquid levels in the precooler and the subcooler helium pots are important indicators for system recovery. After the magnet is cooled back down from quench, the MAGCOOL system must wait for the reestablishment of liquid in these pots. The level gages are 12 inches long and hang from the top of the helium pots. The 12 inch length is scaled to 100% with each % equals to 0.12 inch and approximately 0.8 liter. 100% reading represents liquid helium is at the top of the gage and the helium pot is full. However 0% readings represent that liquid helium is below the 12 inch height and does not mean the pot is empty.

The liquid level readings in the precooler and the subcooler are given in Fig. 7a and 7b. As can be seen, the subcooler liquid level varies only by a small amount because most of the heat is absorbed by the precooler. For the 5000 ampere quench, the liquid in the precooler did not fall below the level gage. The gage reading bottoms out at 14% before it turns around. In 25 min. the liquid level is reestablished. For the 6700 ampere quench, the liquid level in the precooler actually falls below the gage but the precooler still has sufficient liquid to cool the helium stream. Quench recovery time is 25 min. for the 5000 ampere quench and 40 min. for the 6700 ampere quench.

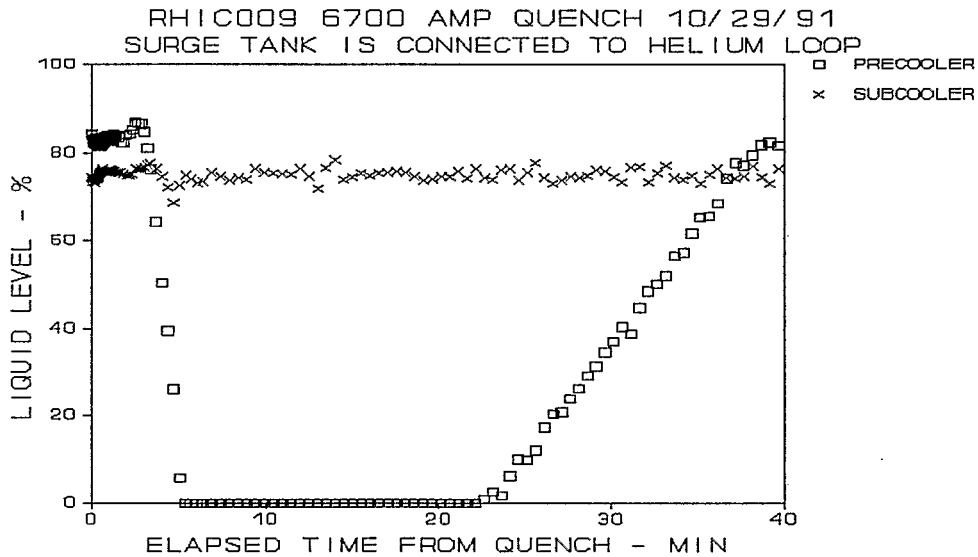

Fig. 7a liquid levels for 6700 ampere quench

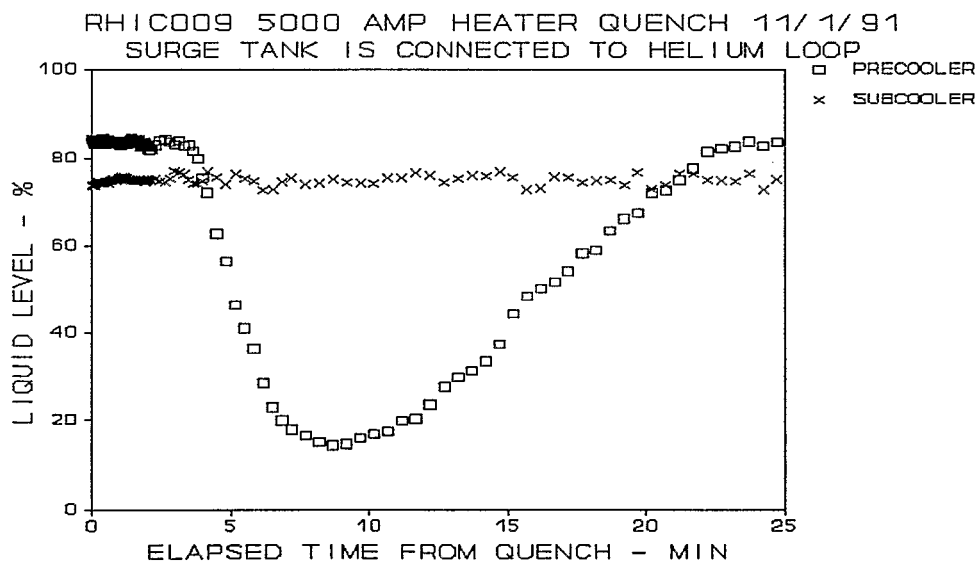

Fig. 7b Liquid levels for 5000 ampere quench

SURGE TANK

The surge tank is connected to the helium loop as shown in Fig. 8. The pressure in the tank is essentially the same as in the loop, but the temperatures can be quite different. After a magnet quench, the helium in the loop is heated up and causes the pressure to increase. A portion of helium near the surge tank will be expelled into the tank. The amount of helium in the loop will decrease and the amount of helium in the tank will increase. The surge tank serves as an expansion tank for the helium loop. With a large surge tank, the pressure rise rate and the peak pressure can be controlled to a level which is significantly lower than that of a helium loop without a tank. Helium will flow back into the loop when the system is cooled back down. Total helium in the system is constant since no helium has been vented out externally.

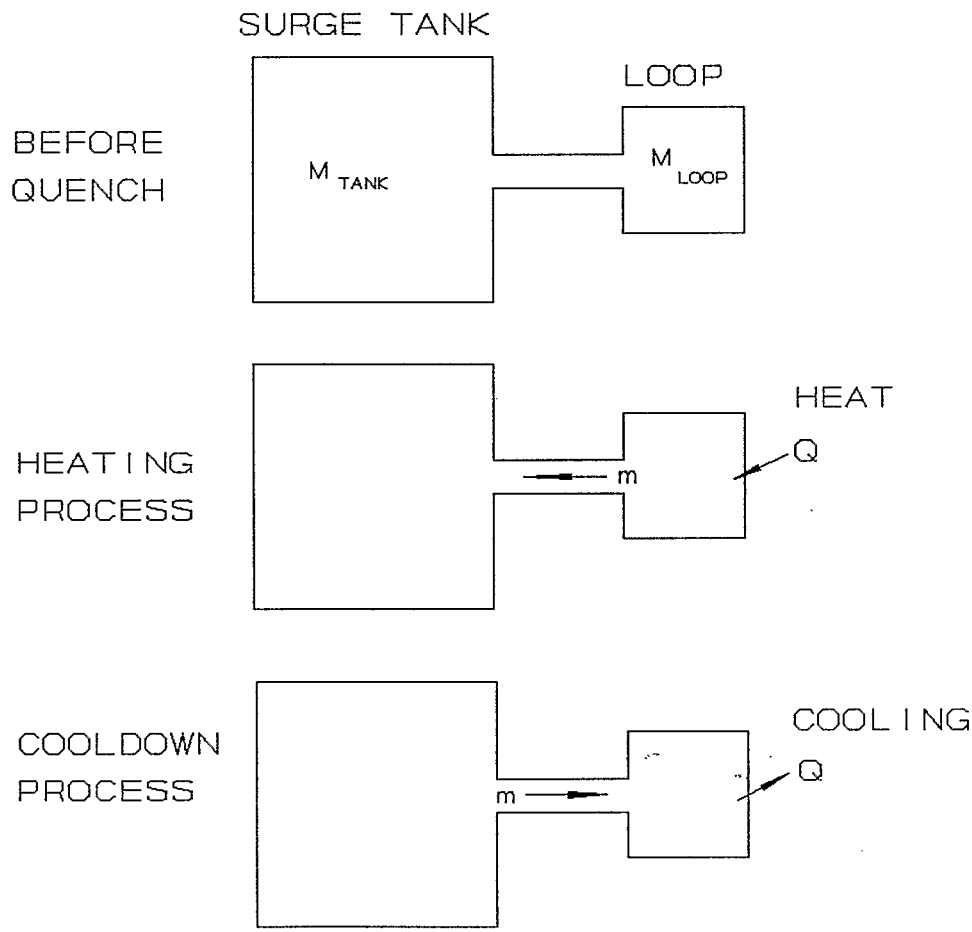

Fig. 8 Mechanism of surge tank

In addition to damping the pressure, the tank helium also helps to absorb the heat released during a magnet quench. Total energy absorbing capability equals to the change in internal energy of the loop plus that of the tank. In the present study, the volume of the surge tank is more than four times that of the helium loop. A small change in tank temperature corresponds to a large change in internal energy.

Fig. 9a and 9b show the change in mass of helium in the loop and the tank. As can be seen, the decrease of helium in the loop is approximately equal to the increase of helium in the tank. Complicate piping configuration and nonuniform temperatures in the system limit the accuracy of these results. The amount of helium, that flows into the surge tank, equals to 9 kilo gram, about 65 liter, for 6700 ampere quench and 6.3 kg, about 45 liter, for 5000 ampere quench.

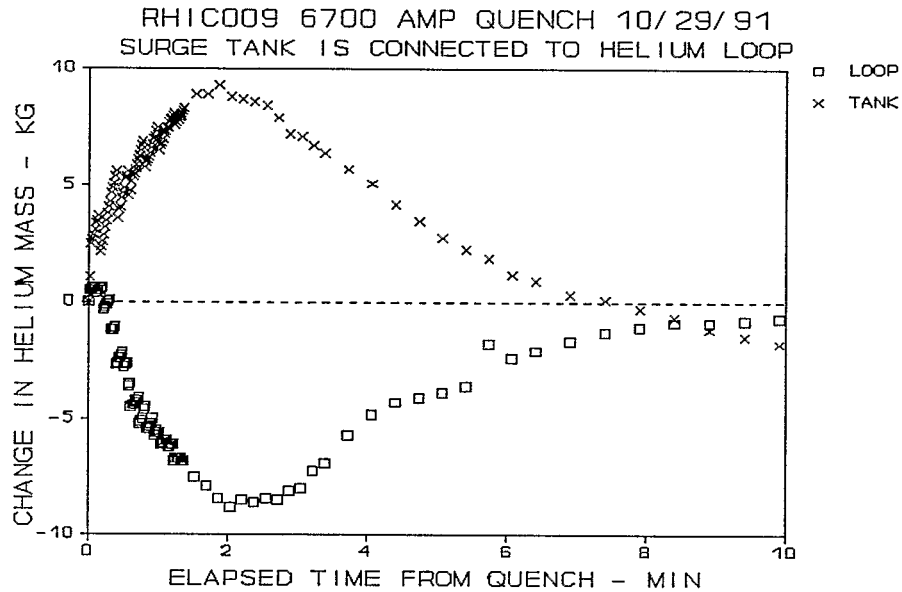

Fig 9a. Change of helium mass for 6700 ampere quench

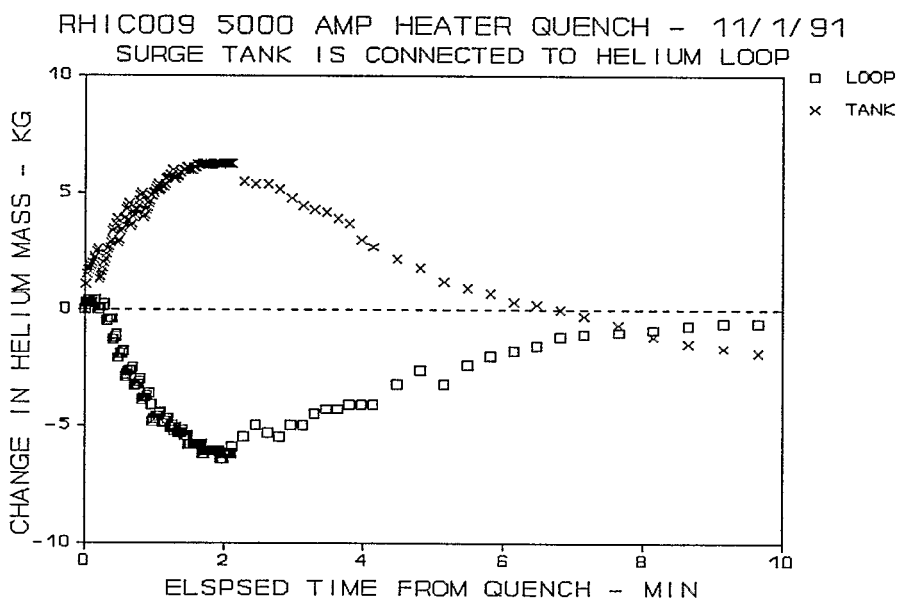

Fig. 9b Change of helium mass for 5000 ampere quench

Fig. 10a and 10b show the change of internal energy for the system. In both Fig. 10a and 10b, the amount of energy absorbed by the tank is of the same magnitude as that absorbed by the loop. The total energy absorbed by helium is approximately twice that the loop alone. The loop and tank system can absorb 480 kilo joules for 6700 ampere quench and 285 kj for 5000 ampere. Thus 2 min. after quench, majority the energy released by the magnet is absorbed by the loop and the tank system. The rest of the energy remains in the magnet and associated piping.

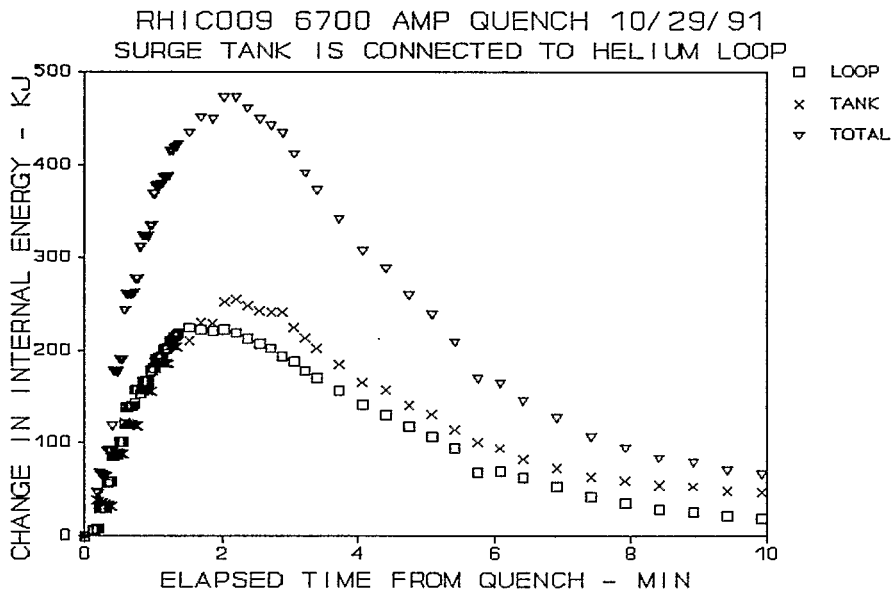

Fig. 10a Change of internal energy for 6700 ampere quench

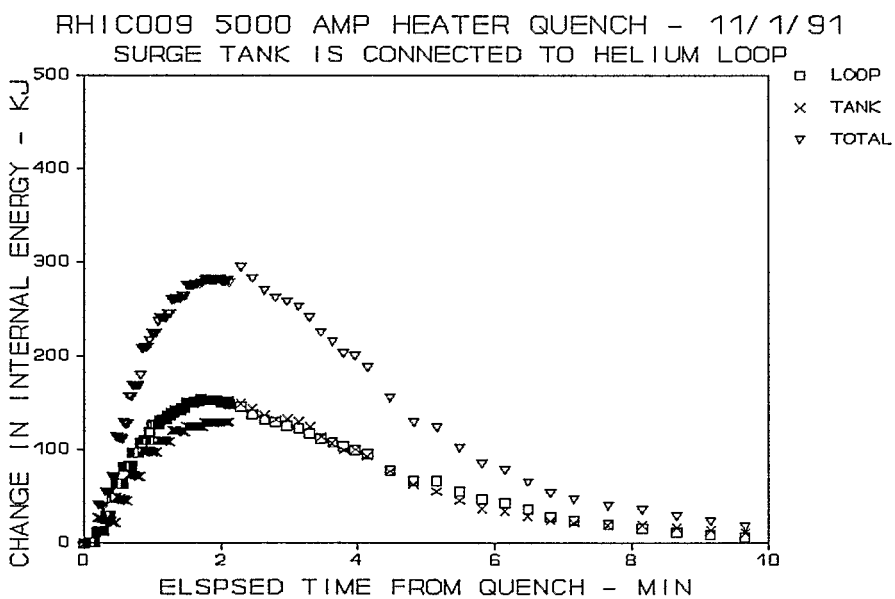

Fig. 10b Change of internal energy for 5000 ampere quench

COOLING CAPACITY

The heating/cooling rate of MAGCOOL during quench recovery is of great interest but the exact rates are difficult to calculate due to the transient nature of the process. The system which started at test conditions is eventually cooled back to the original conditions. The enthalpy flux difference through the magnet can be considered as the apparent heating rate the magnet releases. Likewise the enthalpy flux difference between the supply and the return of the MAGCOOL cold box can be considered as the apparent cooling rate MAGCOOL provides. The net useful cooling for quench recovery is equal to the above cooling rate minus the background heat load. The background heat load is small for the magnet but is about 280 watt in the supply and return distribution headers of MAGCOOL.

Fig. 11a and 11b show the apparent cooling rate for 6700 ampere and 5000 ampere quench. The peak heating rate for the magnet equals to 6.1 kw occurs 1.1 minutes after quench for 6700 ampere case. The peak apparent cooling the MAGCOOL cold box provides equals to 4.2 kw occurs 2.9 minutes after quench. After about 10 minutes, most heat from the magnet has been removed and the apparent cooling rate for MAGCOOL cold box approaches the steady state background heat load. For 5000 ampere quench, the peak apparent magnet cooling rate is 3.9 kw occurs at 1.2 minutes. The peak apparent cooling rate for the cold box is 2.6 kw at 3.1 minutes.

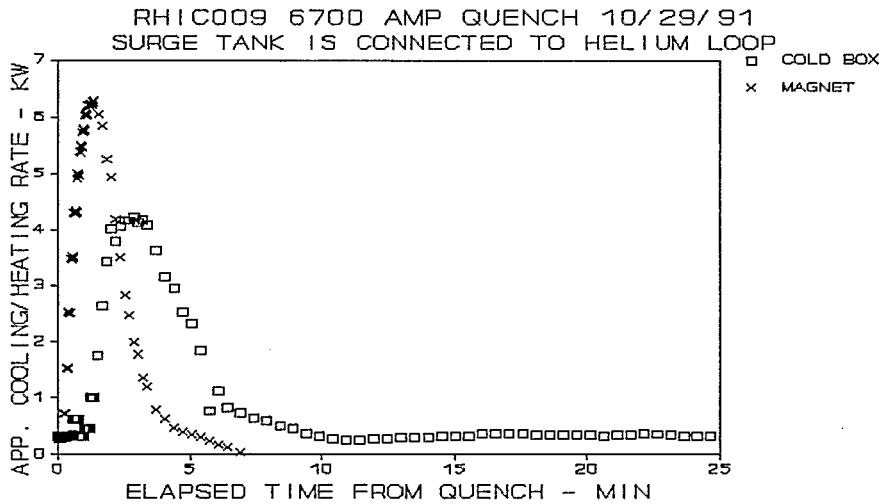

Fig. 11a Apparent cooling rate for 6700 ampere quench

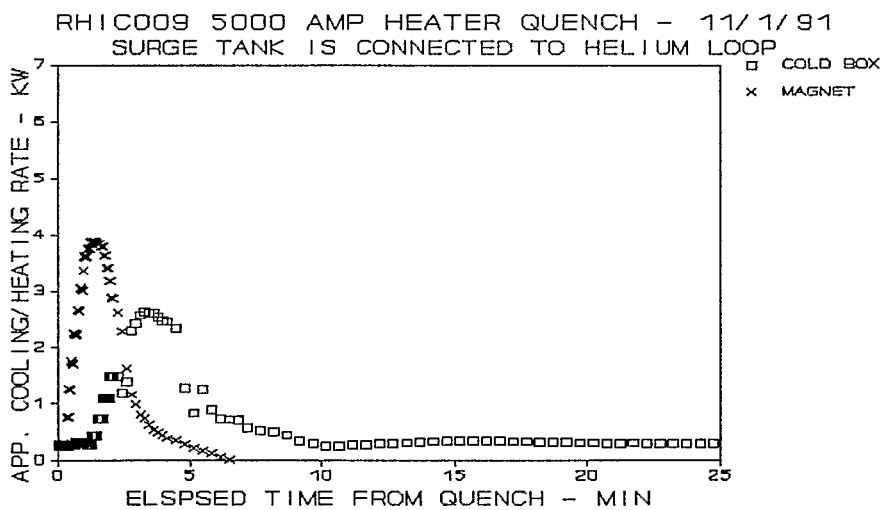

Fig. 11b Apparent cooling rate for 5000 ampere quench

The integrated totals of net apparent cooling as functions of time for RHIC 009 and MAGCOOL cold box for 6700 and 5000 ampere quenches are given in Fig. 12a and 12b. As can be seen, the results as obtained from the magnet lead that of the cold box by about 2 minutes. The two results approach each other after 12 minutes. The net integrated total cooling equals 840 kj for 6700 ampere quench and equals 470 kj for 5000 ampere quench. These values are about 25 % higher than the corresponding values obtained previously in AD/RHIC/RD-29 and are 35 % higher than the stored energy of 351 kj for 5000 ampere and 589 kj for 6600 ampere current given in the RHIC conceptual design.

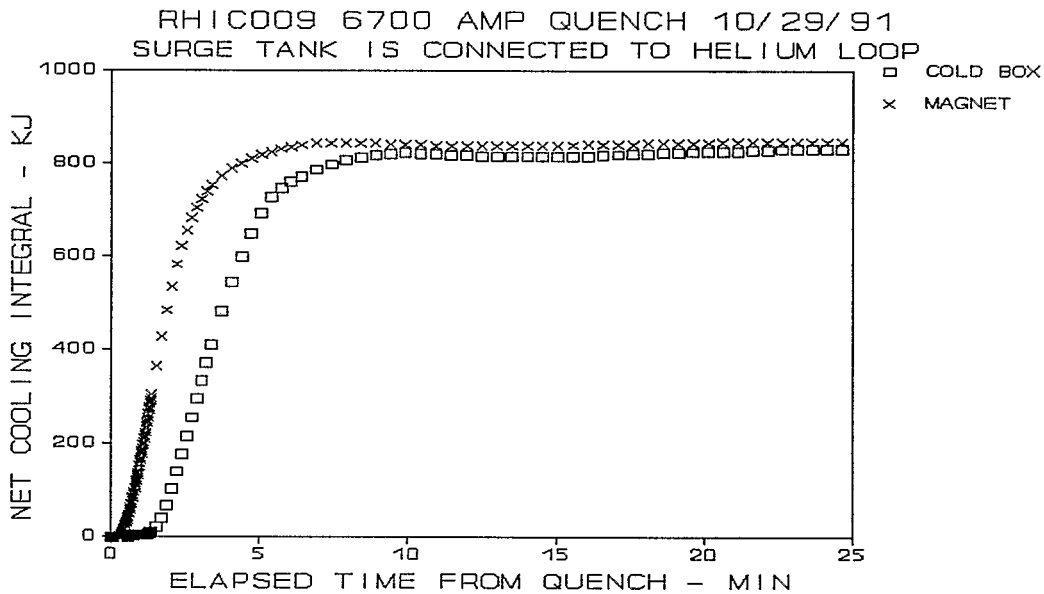

Fig. 12a Integrated totals of net apparent cooling for 6700 ampere quench

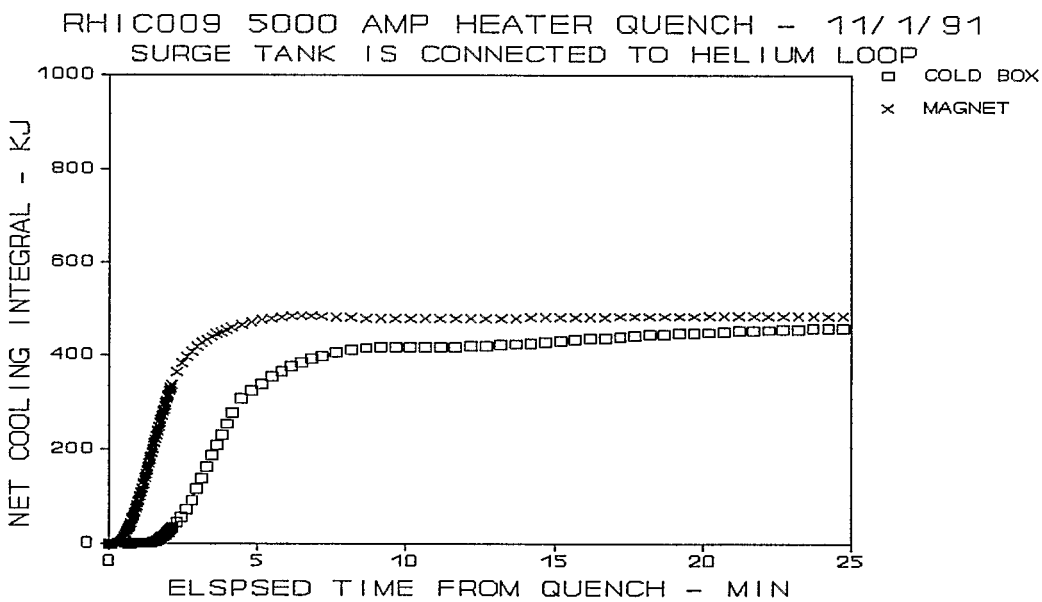

Fig. 12b Integrated totals of net apparent cooling for 5000 ampere quench

DISCUSSION

The pressure behavior is the primarily difference between the present results and that previously reported for the situation without surge tank in the circulating loop. A large volume connected to the circulating loop permits a slow and smooth pressure rise rate, and also leads to a low peak pressure. Only minor difference in the characteristics of temperatures, flow rates and liquid level are found between the present study and previous investigation.

The cooling rate obtained in the present study is higher than previously obtained in AD/RHIC/RD-29. The net integrated cooling is 35% more than the stored energy calculated from magnetic energy. Although the results from AD/RHIC/RD-29 better agree with the magnetic energy, the present results should be considered more reliable because there is no venting involved. The 35% discrepancy most likely comes from the error accumulation from measurements and calculation involved.

The significance of the present study is that the peak pressure has been successfully reduced with the surge tank connected to the loop volume.

CONCLUSION

The 10 atm peak pressure obtained for the 5000 ampere clearly suggests the pressure rise due to **one magnet quench in RHIC** will not exceed **10 atm** and it is not necessary to open the vent valve for pressure relief.

ACKNOWLEDGEMENT

The author would like to thank D. Zantopp for developing the necessary data acquisition software, D. Brown for providing helpful comments and suggestions and S. Agnetti for preparing this paper.