AD/RHIC/RD–55

RHIC PROJECT

Brookhaven National Laboratory

Structural Analysis of the RHIC Dipole Magnet Assembly

Rudy Alforque

March 1993

Structural Analysis of the RHIC Dipole Magnet Assembly

by Rudy Alforque

I. Introduction

A basic structural analysis of the RHIC dipole magnet assembly is being presented considering two cases, namely, Case I: Dipole Assy. With Only Two Stands, and Case II: Dipole Assy. With Three Stands. A graphic representation of both cases are shown in Figs. 1, & 2. Static vertical deflections were determined as well as torsional deformation due to the sagitta of the cold mass. In addition, a basic modal analysis was performed in order to determine the natural frequencies of the assembly; Only six modes were extracted, thus providing comparative data as to the possible response of each case to any possible harmonic excitation.

II. Analysis

A) Finite Element Analysis

A finite-element model using 3-D beam elements (ANSYS Stif4) was generated based on the parameters shown on Figs. 1, & 2. The cold mass shell, cryostat, end volume shell, and ultem post were represented by the beam elements. The mass and weight of these components were automatically calculated by ANSYS based on the given material and physical properties. The combined weight of the coil, beam tube, and yoke was imposed as a uniform load on the cold mass shell. Similarly, the additional weight of the leads, and the beam tube inside the end volume were applied as a uniform load on the end volume shell. Thus, conservatively, the bending stiffness of the structure was only governed by the beam elements. In addition, the weights of the end plates were applied as nodal loads at the ends of the cold mass and end volumes, respectively. Other relevant parameters used in the analysis are given in Table 1.

For both cases, simple supports were assumed, i.e. rotation about the z-axis was permitted at the support points, but translation in the y-axis was fixed. For Case I, one support was additionally fixed in the x-direction, while the other support point was allowed to slide along the x-axis; Case II had the x-translation fixed on the center support, while sliding was allowed at the other two support points.

For each Case, a static analysis (KAN=0) was performed to determine the static vertical deflections. Table 2 shows the vertical deflections at specific locations as indicated in Figs. 1, & 2. Then another run was performed for modal analysis (KAN=2); Table 3 shows the resulting natural frequencies for six modes. Only Mode 1 is the fundamental mode of interest.

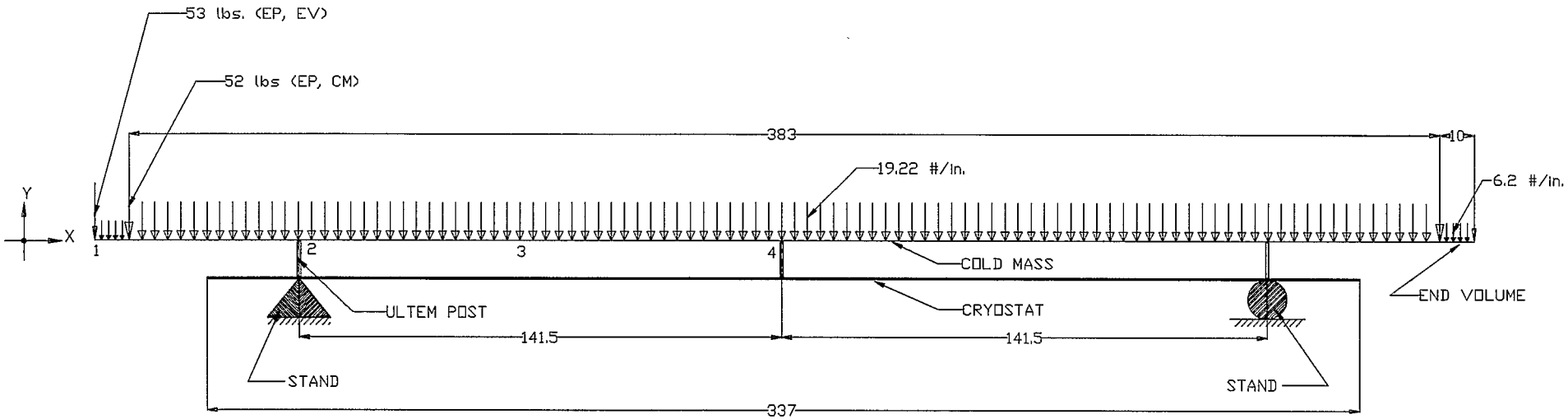

FIG. 1: ANALYTICAL MODEL, CASE I

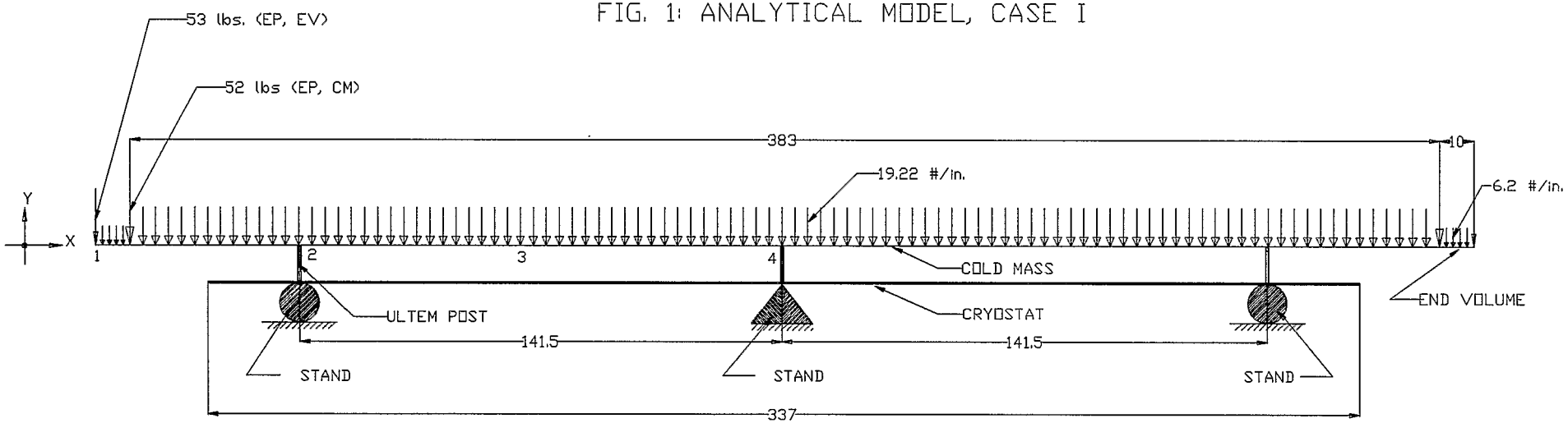

FIG. 2: ANALYTICAL MODEL, CASE II

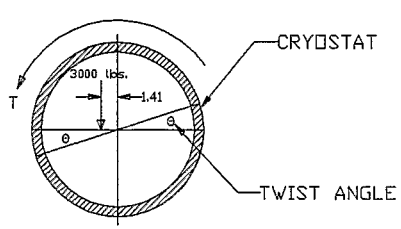

FIG. 3: TORSION

B) Torsional Analysis

Torsional analysis is only needed for Case I where there are only two stands. The center post will transmit about 3000 lbs. to the cryostat at an offset distance of 1.41 in. due to the sagitta of the cold mass, as shown in Fig. 3. In a very simplistic approach, one can assume that this would cause a twisting moment on the cryostat that may result in distorting the magnet midplane. If this distortion is significant, functionality of the magnet maybe adversely affected.

The twist angle, θ, however, can be simply calculated as follows:

$$\theta = TL/JG,$$

where, T = Torque = (3000)(1.41)=4230 in-lbs.
L = Length subjected to torsion = 141.5 in.
J = Cryostat Polar Inertia = 2xI(zz) = 2630 in.^{4}
G = Cryostat Shear Modulus = 12 x 10^6 psi

Hence, θ = 0.02 mrad. This angle is so small and lies well within the prescribed angular tolerance.

Table 1: Physical Parameters

	Coil	BmTube	Yoke	CMShell	Cryostat	EVShell	EP,CM	EP,EV	Post
O.D., in.	3.945	2.875	10.5	10.875	24	14.25	13.5	13.5	8.756
I.D., in.	3.15	2.721	4.7	10.5	23.5	13.5	4.7	2.875	8.38
Ave.Rad, in.	1.774	1.399	3.8	5.344	11.875	6.938	4.55	4.094	4.284
thick,in.	0.397	0.077	2.9	0.188	0.250	0.375	4.40	5.313	0.188
Holes,in.			4.43				4.43	11.98	
Area,in.^{2}	4.43	0.677	64.8	6.295	18.653	16.346	121.4	124.7	5.06
L,in.	379.5	383	379.5	380.5	337	10	1.5	1.5	11
I(zz),in.^{4}		0.662		90	1315	393	1302	1145	93
Poissons		0.300		0.300	0.300	0.300	0.300	0.300	0.300
E, psi				2.8×10^7	2.8×10^7	2.8×10^7			6.5×10^5
ρ , #/in.^{3}	0.321	0.283	0.278	0.283	0.283	0.283	0.283	0.283	0.048
Vol, in.^{3}	1681	259	24596	2395	6286	163	182	187	56
Wt, lbs.	450	73	6838	678	1779	46	52	53	3
Uniform Load, #/in.				19.22		6.2			
Total Load, lbs.				7361		62			
Load+Weight, lbs.				8039		108			
Total: 10251 lbs.									

Table 2: Static Displacements, Uy

Location	Case I	Case II
	(in.)	(in.)
1	-.016	-0.032
2	0	0
3	-0.036	-0.014
4	-0.043	0

Table 3: Natural Frequencies

Modes	Case I	Case II
	(Hz)	(Hz)
1	29.89	39
2	39	41.86
3	41.79	43.22
4	41.83	45.45
5	48.15	55.32
6	50.71	74

III. Conclusion

From the comparative study described above, it seems there is little advantage in providing three supports for the dipole assembly. From Table 2, the overall static deflection spread is:

$$(-0.043-(-0.016))= -0.027, \text{ for Case I, and}$$
$$(-0.032-(-0.014))= -0.018, \text{ for Case II.}$$

The difference between the two cases with respect to static vertical deformation is quite small, and besides, the vertical deflection is not so critical as long as the magnetic field remains vertical, i.e. the magnet midplane is not rotated beyond the acceptable limits. Similarly, from Table 3 the difference in the fundamental mode (mode 1) between the two cases is not so significant.

For obvious economic reasons due to the sheer number of assemblies involved, it is very attractive to use only two stands as idealized in Case I. Of course, in reaching this conclusion, one has to assume that the machining and assembly tolerances of the magnet components are within the prescribed mechanical tolerances. Clearly, sloppiness, for example loose bolted joints, can easily result in a system behavior that is almost impossible to predict by analysis.

Acknowledgement:

I am grateful to John Koehler and Jack Sondericker for their very useful comments during the preparation of this note.