AD/RHIC/RD–80

RHIC PROJECT

Brookhaven National Laboratory

Final Design Report

Modification of Cold Box 5 for RHIC Helium Refrigerator

K C. Wu

November 1994

I). DESIGN CRITERIA

The Main Refrigerator for RHIC was originally designed to cool the proposed collider magnets for the ISABELLE/CBA ring.[1] The refrigerator was purchased in 1979. The installation was completed in 1984 at the same time with the Compressor Station. Two acceptance tests were conducted in 1985 and 1986. The capacity of the refrigerator was measured as 23.1 kW at 4 K plus 55 kW of shield cooling at 55 K.[2] While the refrigerator shows ample margin for RHIC, modifications will be required since the operating temperature and cooling scheme for RHIC is different from the original ISABELLE/CBA design. The following changes are to be performed in Cold Box 5 of RHIC refrigerator:

1. replacement of the four stage cold vacuum compressor by a smaller single stage compressor,
2. replacement of the circulating compressor in Cold Box 5 by two small circulating compressors located in the 6 o'clock Valve Boxes, and
3. re-route of the return line from RHIC magnets to the low pressure side of the refrigerator.

The piping system and associated equipment will maintain the same standard as the existing system which complies with the ASME Boiler and Pressure Vessel Code, Section VIII, Div. 1, Unfired Pressure Vessels, B31.3 Petroleum Refinery Piping and ASTM Materials Standard.

II). SUMMARY OF DESIGN FEATURE

The modification of RHIC refrigerator can be explained from the Cycle Schematics. Figure 1 shows the flow schematic for the ISABELLE/CBA refrigerator. The three circles indicate the compressor which will be replaced or eliminated. Figure 2 shows the flow schematic for RHIC refrigerator.

The performance requirement for the refrigerator was calculated[3] using the updated heat load, operating temperature and cooling scheme for RHIC. The results are given in Table 1. In Table 1, the required heat exchanger and turboexpander are checked against the "As Built" parameters. The existing heat exchangers and turboexpanders of the refrigerator are found to be suitable for RHIC. In this baseline calculation, the required main compressor flow is 2500 g/s (approximately 60 % of the installed capacity).

However, the original cold compressors C1/C2 and C3 can not be used. A single stage cold vacuum compressor will be used for 4.5 K operation. The nominal design condition for the cold vacuum compressor is given in Table 2.[4] A complete specification is given in reference 5.

Through competitive bidding, Barber-Nichols (Denver, Colorado) was selected as the supplier of the cold compressor. A sectional view for this compressor is given in Fig. 3. Other design features are summarized in Table 3.[6] Unlike compressors with magnetic or gas bearings, this unit utilizes low vapor pressure ball bearing and requires preventive maintenance. Mean time between maintenance is 8000 hours. The compressor and a spare unit were delivered to BNL in December, 1993. Interface for computer control was completed subsequently.

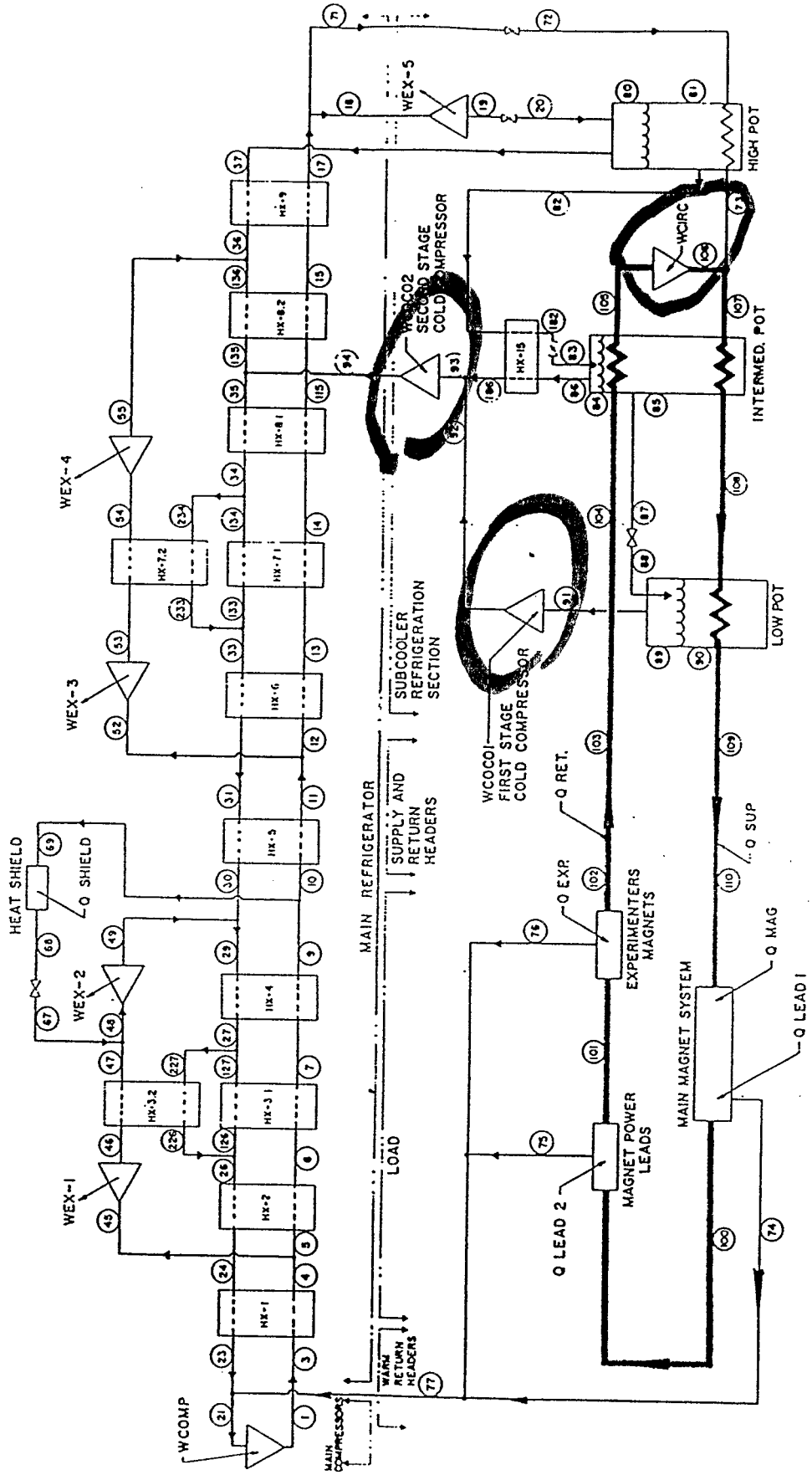

Fig. 1 Cycle Schematic for ISABELLE/CBA Refrigerator

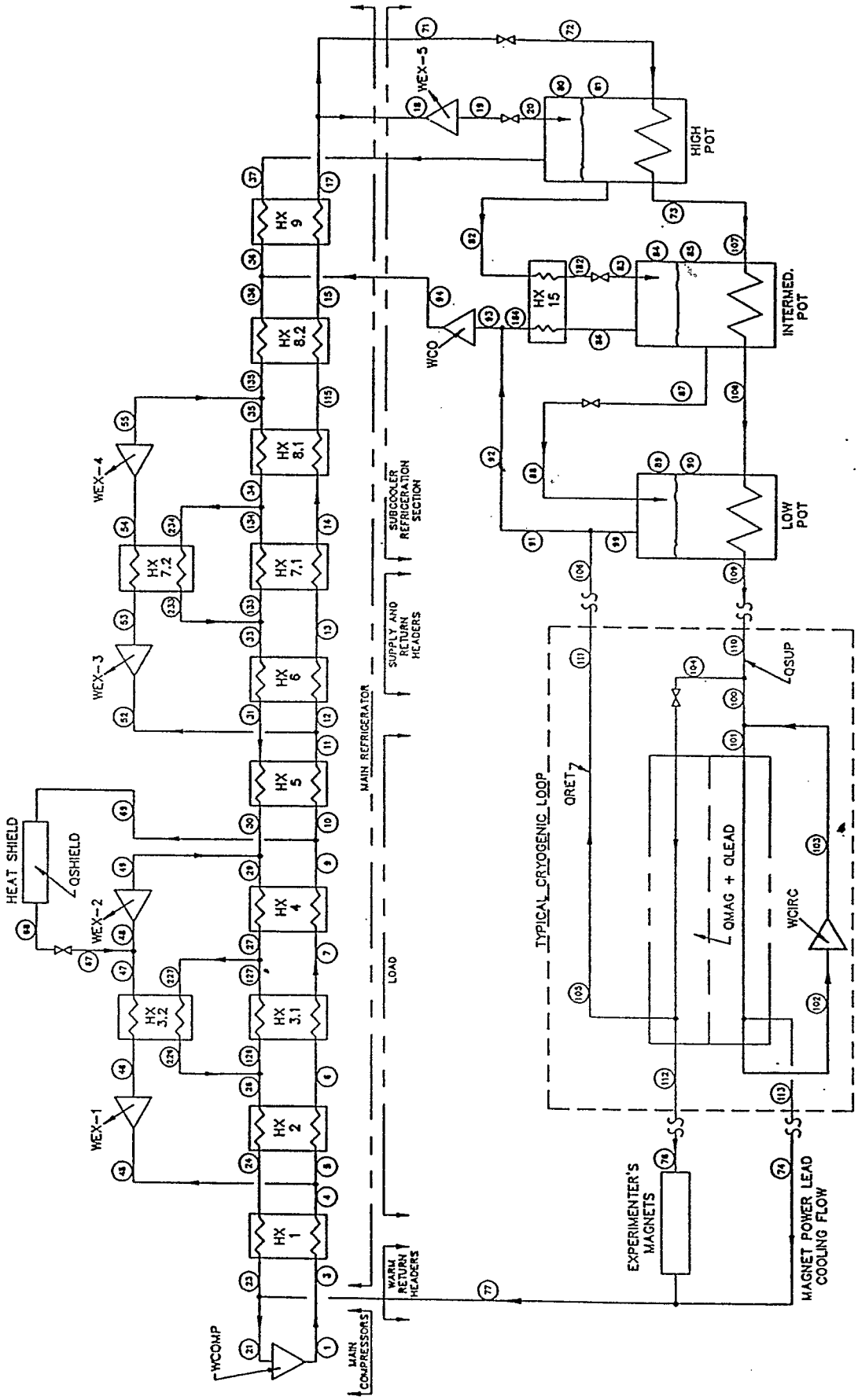

Figure 2 Flow Schematic for RHIC Refrigerator

Table 1: Performance Requirement for RHIC Refrigerator at Design Condition

PROGRAM RHIC

CALCULATE PERFORMANCE OF RHIC HELIUM REFRIGERATOR WHICH
UTILIZES 5 EXPANDERS AND 1 COLD VACUUM COMPRESSOR.
CIRCULATING COMPRESSORS LOCATED IN THE RINGS ARE USED
TO CIRCULATE THE COLD HELIUM THROUGH THE MAGNETS.

SUMMARY OF SYSTEM PARAMETERS

REFRIGERATION-WATTS					MASS FLOW-G/S	
QMAG	QLEAD	QSUP	QRET	QSHLD	F74	F76
2875.	1855.	800.	240.	55000.	48.	45.

ESTIMATED HEAT LEAKS IN THE HEAT EXCHANGERS - WATTS

HX1	HX2	HX3	HX4	HX5	HX6	HX7	HX8	HX9	H. POT	I. POT	L. POT
950.	3240.	2670.	1880.	240.	410.	600.	520.	180.	340.	290.	290.

HEAT EXCHANGER PARAMETERS

HEAT EXCHANGER	HIGH P FLOW G/S	LOW P FLOW G/S	CMAX/ CMIN	EFFECTIVENESS RATIO	REQUIRED AU KW/K	NTU	DESIGN AU KW/K
1.0	2486.4	2393.4	1.040	.977	317.0	25.51	684.0
2.0	1853.3	2393.4	1.274	.937	64.2	6.66	183.1
3.1	1853.3	1783.6	1.046	.979	240.6	25.96	533.8
3.2	633.2	609.9	1.046	.979	81.3	25.66	103.8
4.0	1853.3	2393.4	1.256	.978	114.2	11.60	280.4
5.0	1449.0	1356.0	1.128	.967	94.9	13.40	201.2
6.0	647.8	1356.0	1.799	.873	12.7	3.38	58.4
7.1	647.8	626.2	1.216	.944	26.6	7.96	127.8
7.2	801.1	729.7	1.216	.944	31.0	7.95	148.5
8.1	647.8	1356.0	1.689	.895	13.9	3.05	33.7
8.2	647.8	554.8	1.191	.947	14.0	4.68	61.8
9.0	647.8	187.8	1.484	.807	3.1	1.69	11.5

EXPANDER PARAMETERS

TURBINE	PIN ATM	POUT ATM	TIN K	TOUT K	FLOW G/S	ETA	WORK W
1.0	16.23	9.00	180.00	151.78	633.	.75	94317.
2.0	8.86	1.30	65.84	39.42	1037.	.75	143895.
3.0	15.58	8.00	25.00	20.73	801.	.70	17080.
4.0	7.92	1.41	12.45	7.50	801.	.70	15512.
5.0	15.49	2.50	5.03	4.98	259.	.50	1184.

COMPRESSOR PARAMETERS

COMP.	ISO-THER. EFF.	ADIA-BATIC EFF.	PIN ATM	POUT ATM	TIN K	TOUT K	FLOW G/S	WORK KW	WORK H.P.	IN VOL FL ACFM	IN DENSI. G/CC	PRES RATIO
MAIN	.50		1.05	17.25	302.0	305.0	2486.	8803.	11801.			
COLD		.60	.92	1.40	4.20	5.24	367.0	1.779	2.385	52.4	.0148	1.531
CIRCU.		.50	4.58	5.00	4.50	4.62	100.0	.063	.084		.136	

ONE CIRCULATING COMPRESSOR IS REQUIRED IN
EACH OF THE 2. CRYOGENIC LOOPS

LOAD SUMMARY

	PRIMARY LOAD SUPPLY	PRIMARY LOAD RETURN	SECONDARY LOAD SUPPLY	SECONDARY LOAD RETURN
FLOW RATE-G/S	388.77	295.77	404.32	404.32
PRESSURE-ATM	5.01	.93	15.67	9.67
TEMPERATURE-K	4.19	4.23	40.00	65.81
ENTHALPY-J/G	11.02	30.95	222.00	358.03

Table 2. The nominal design condition for RHIC Cold Vacuum Compressor

Adiabatic Efficiency (%)	0.60
Flow Rate (gm/sec)	367
Input Work (watts)	1747
Inlet	
Pressure (atm)	0.92
Temperature (K)	4.20
Density (gm/cc)	0.0149
Volume flow (liter/sec)	24.59
Outlet	
Pressure (atm)	1.40
Temperature (K)	5.22
Density (gm/cc)	0.0173
Pressure ratio	1.52

Table 3. Design Features for RHIC Cold Vacuum Compressor

Manufacturer:	BARBER-NICHOLS
Model:	BNHEP-11
Type:	FULL EMISSION CENTRIFUGAL COMPRESSOR
Motor:	208 V, 3-PHASE, 2 POLE, HERMETICALLY SEALED
Control:	G.E. AF-300B VARIABLE FREQUENCY DRIVE, INTERFACE WITH CRISP PROCESS CONTROL COMPUTER
Speed:	9,400 RPM - OPERATING 13,000 RPM - MAXIMUM
Bearing:	LOW VAPOR GREASE BALL BEARING (8,000 HOURS BETWEEN MAINTENANCE)
Cooling:	WATER/GLYCOL, CLOSED LOOP
Special Feature:	ROTATING ASSEMBLY CAN BE REMOVED WITHOUT REMOVING THE HOUSING
Specification:	RHIC-CR-E-3101-0028, DEC. 18, 1992 COLD VACUUM COMPRESSOR FOR RHIC HELIUM REFRIGERATOR

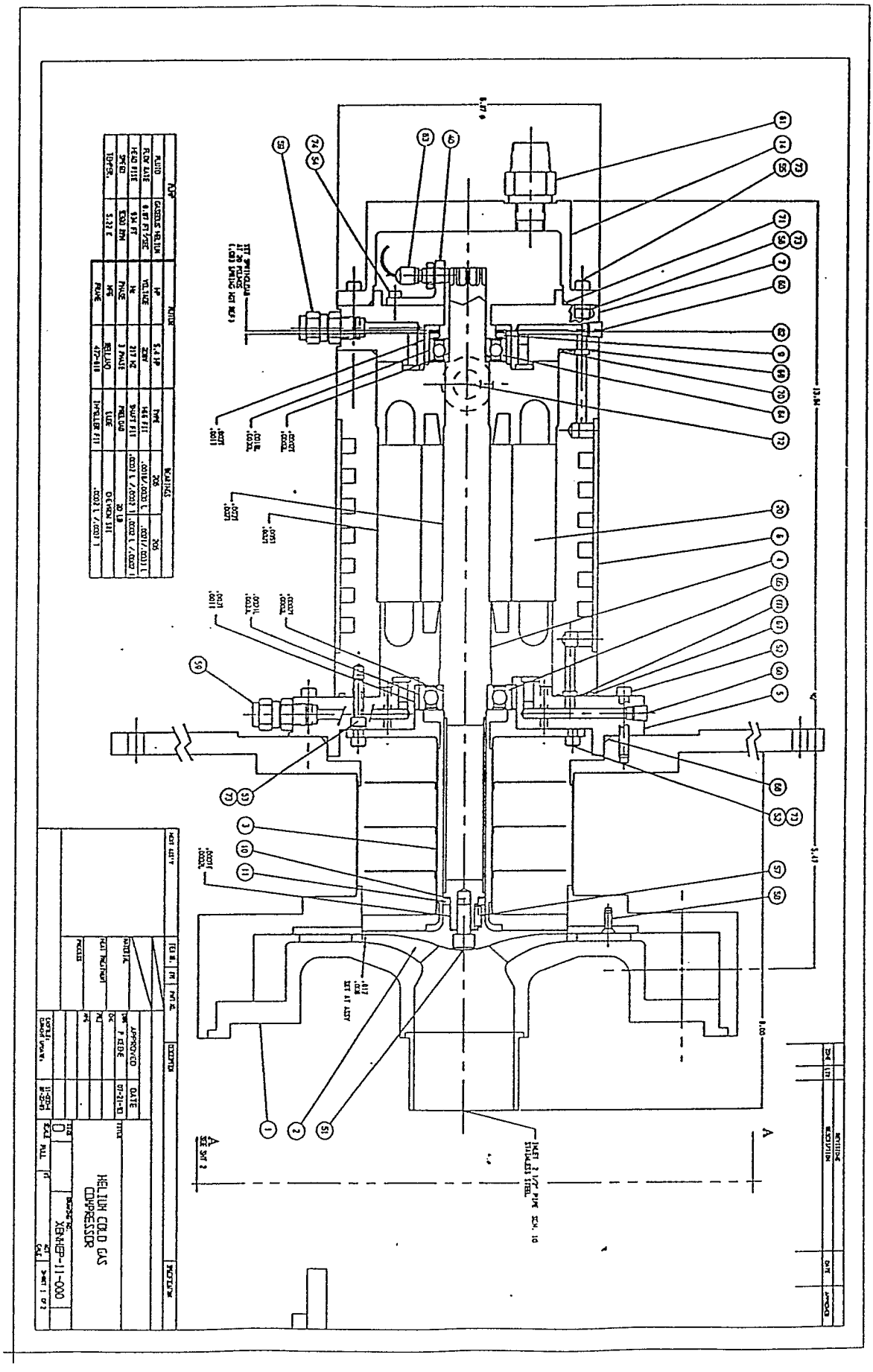

Figure 3. RHIC Helium Cold Vacuum Compressor

A 42" x 48" x 52" rectangular cold box (vacuum tank) with three 24 inch man holes was designed and constructed for attaching the Cold Vacuum Compressor to Cold Box 5. The cold box weldment assembly is given in Figure 4. (Drawing 31015065 Rev. B) Compared with Rev. A of Drawing 31015065, Rev. B incorporates stronger weld in the box edge suggested by R. Alforque. The structure analysis of this cold box is given in Reference 7. The detailed changes from Rev. A to B are given in BNL ECR/ECN No. CR001006. This cold box is designed for ease of maintenance and its vacuum is separated from Cold Box 5. There are isolation valves at the inlet and outlet of the compressor to allow local warm up and maintenance. Pump out and vacuum relief for the cold box have also been provided.

The RHIC cooling system utilizes two small centrifugal compressors to circulate helium through magnets. Two circulating compressors and a spare unit were also purchased from Barber-Nichols.[9,10,11,12] The circulating compressors will be installed at the 6 O'clock Valve Boxes and are not part of refrigerator modification. In Cold Box 5, the original circulating compressor C3 will be removed. The suction and discharge lines for C3 will be capped. A cover plate will be installed on the C3 vacuum tank penetration.

In summary, the piping alterations will be performed at 4 locations in Cold Box 5 as shown in Fig. 5 (Drawing 31015076) and 6 (Drawing 31015075). A description of these changes are given below:

1). termination of suction and discharge lines for C3.
2). by-pass heat exchanger HX-11 and utilize H130A for low pressure return line
3). re-connect suction and discharge lines for cold vacuum compressor
4). connect the low pressure return from H131A through a 6" spool to the 10" low pressure return line from low pot.

All pipes and fittings used are 304 stainless steel, Schedule 10S of identical ASTM no. to the existing system. Low pressure return line through HX-11 will be supported on the existing heat exchanger nozzle for supporting human weight. Piping alteration maintains the existing characteristics of ample loop for thermal contraction. The 1" relief line to H137R (originally for HX-11) is to be relocated and become relief line for HX-12. Two 1/4" vent lines will be connected to the inlet and outlet of HX-11 for dual purposes of pump & purge and relief.

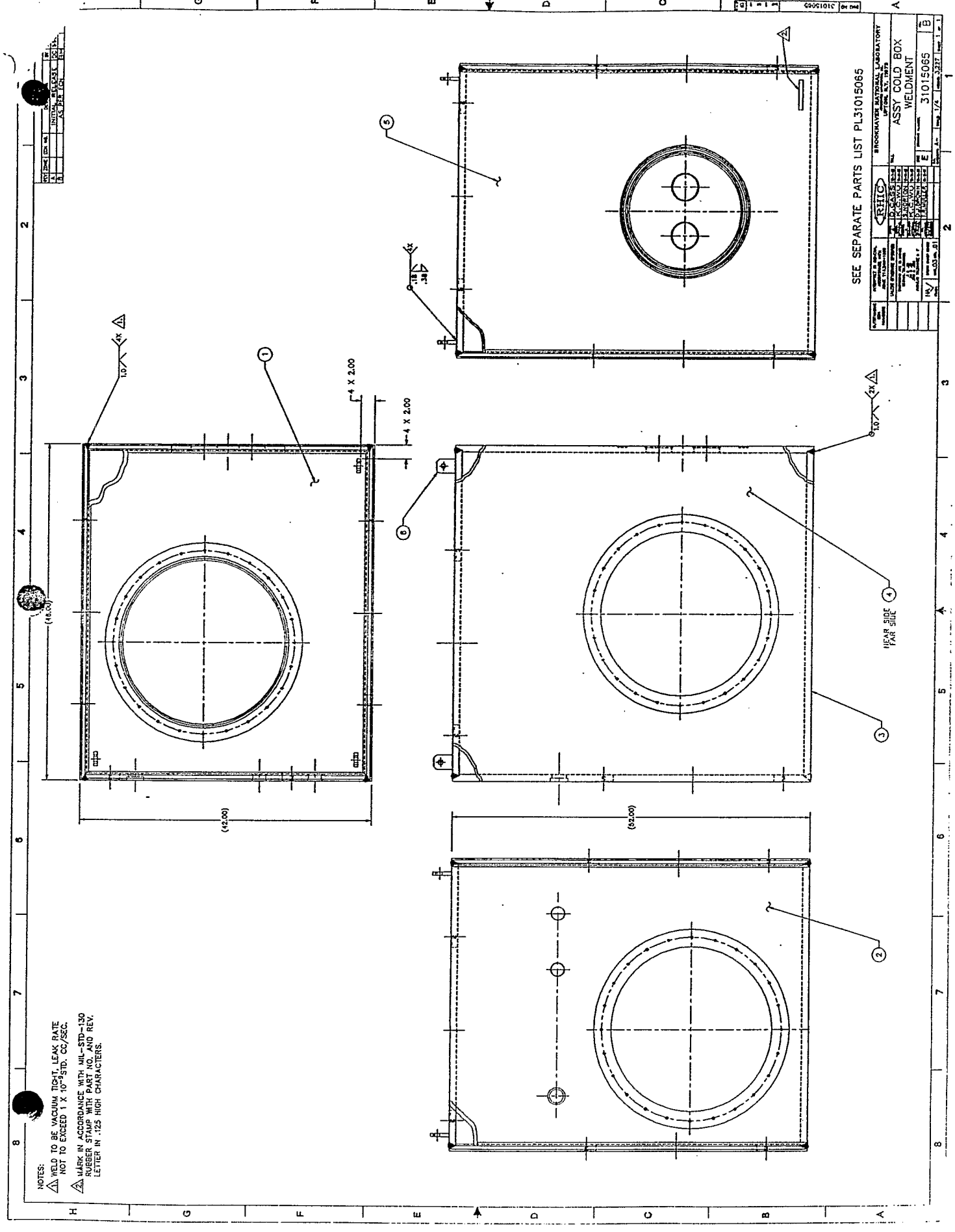

Figure 4. Weldment Assembly for Cold Vacuum Compressor Cold Box

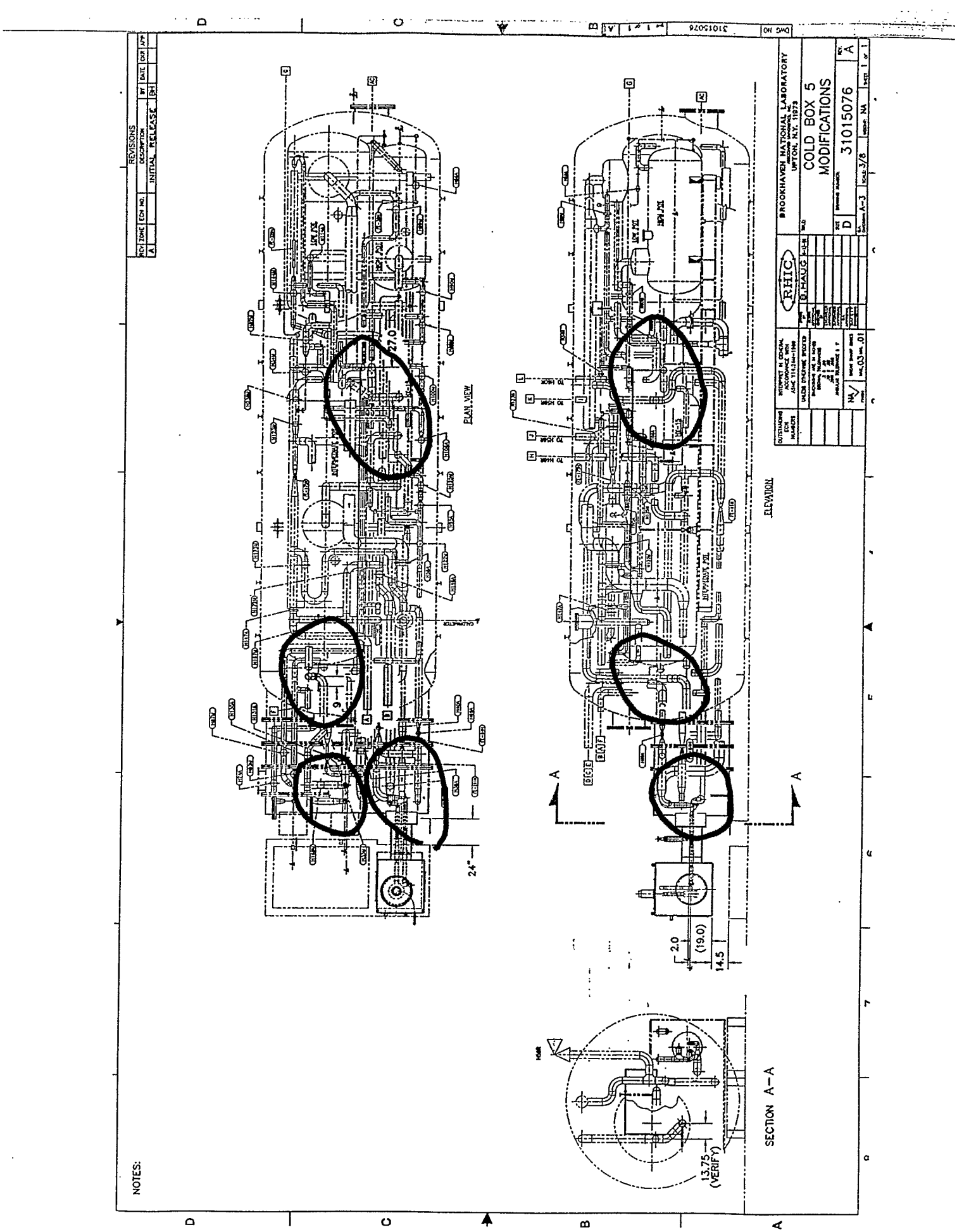

Figure 5. Piping Arrangement for Cold Box 5 Modifications

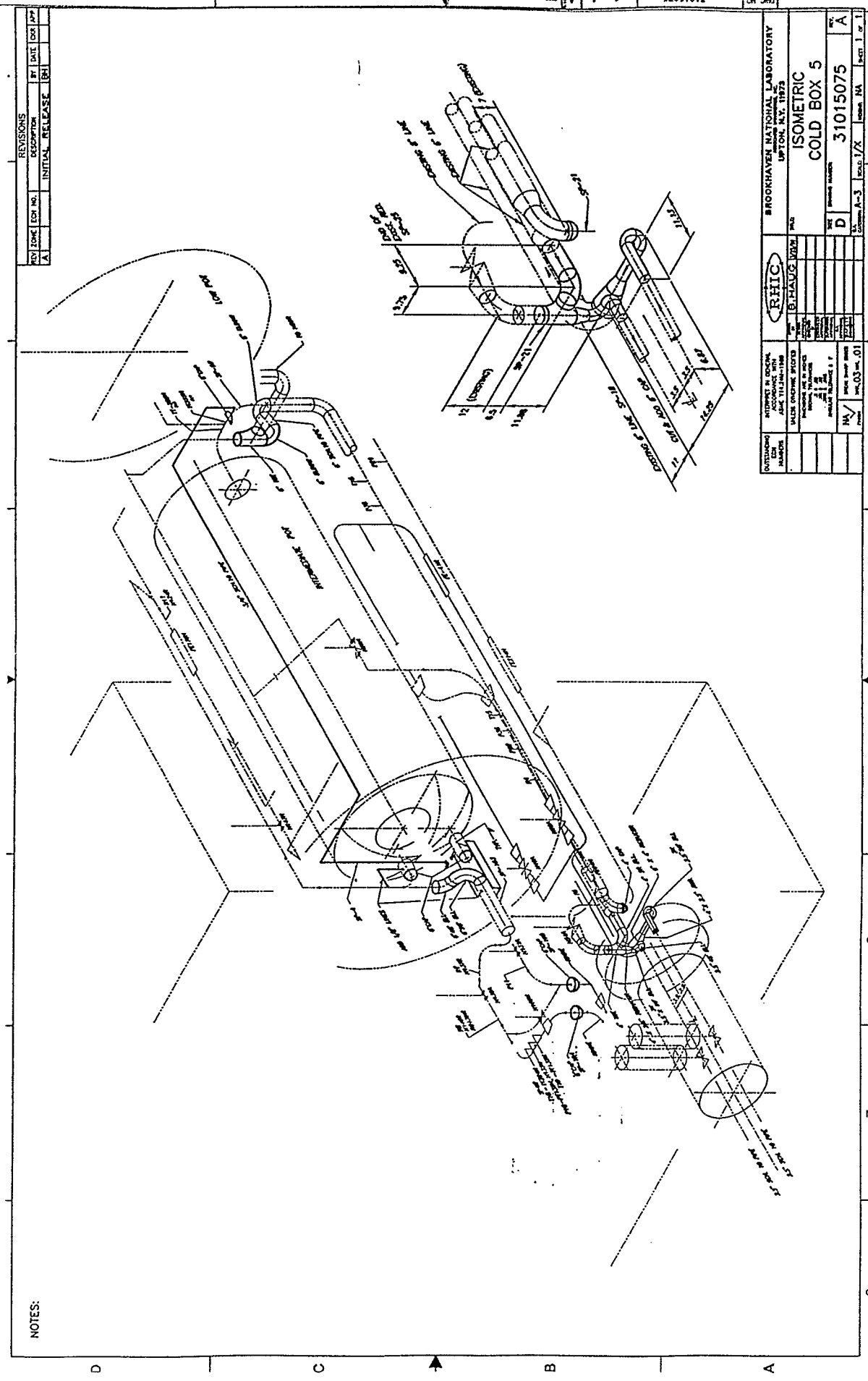

Figure 6. Isometric for Piping Layout of Cold Box 5

III). PROCUREMENT/FABRICATION PLANS

The cold vacuum compressor and a spare unit were purchased from Barber-Nichols in 1993. Both units were delivered to BNL in December 1993.

The vacuum compressor cold box was fabricated by BNL Central Shop. The construction was completed in May 1994. Installation of heat shield and internal piping is underway.

Purchase Order for required piping and fitting for Cold Box 5 modifications was sent to the Contract and Procurement on Oct. 5, 1994.

The design for a flat plate for connecting the Cold Vacuum Compressor Cold Box to Cold Box 5, Drawing 31015077, is complete and is ready for approval. Design for a new cover plate for C3 should begin in December, 1994.

Two circulating compressors and a spare unit were purchased from Barber-Nichols in 1993. Both units were delivered to BNL in January 1994. The circulator cold boxes are currently under fabrication by CVI and are expected to be complete in December 1994.

There is no other special procurement plan. When all required parts are delivered, an ILR will be issued to BNL Central Shop for a welder. As the piping alterations will be performed inside Cold Box 5, the BNL safety procedures will be followed and S&E P will be notified.

IV). TESTING AND INSTALLATION PLANS

The cold vacuum compressor (including spare unit) has been pressure tested to 150 psig, helium leak checked and its performance evaluated at ambient temperature at Barber-Nichols plant prior to shipment.[8] At BNL, functional test driven by a process control computer for these two compressor units were performed in February 1994.

The cold box for the vacuum compressor, constructed by BNL Central Shops, was leak checked and dimensions measured in March 1994.

The piping connections to the original C1/C2 have been removed. Design for piping re-work is completed as shown in the Isometric for Cold Box 5 given in Drawing 31015075. All pipes and fitting used will be stainless steel 304 schedule 10S of identical ASTM number as the original bill of material for the Cold Box 5 piping. Presently, we plan to start the work in November 1994 and complete by January 1995.

After completion of piping re-work, pneumatic tested will be performed to 125 psi or 375 psi (depending on the working pressure) for those altered lines. Detailed description of the area to be isolated and relief valves to be temporary disconnected for the test are given in Appendix I. A final leak check will be performed on all process lines in Cold Box 5. Test results will be documented.

V). PRE-OPERATIONS TESTING PLANS

In addition to tests performed to prove the piping modification meets the design criteria, the following functional tests are planned prior to the operation.

All automatic valves on Cold Box 5, including the variable nozzle for turbine 5, shall be operated from the computer to verify the movement for control function. All manual valves shall also be opened and closed several times to verify the mechanical integrity.

The cold vacuum compressor shall be started both locally and remotely. Cooling water for the unit will be checked.

VI). DOCUMENTATION

Detailed information on the modification of Cold Box 5 are given in the following documentation and drawings.

1. Cycle Design for the Isabelle Helium Refrigerator, D. P. Brown, A. P. Schlafke, K. C. Wu and R. W. Moore, in "Advances of Cryogenic Engineering", Plenum Press, Vol. 27, P525, N. Y. 1982.
2. RHIC Helium Refrigerator System Performance Tests, D. P. Brown, R. J. Gibbs, A. P. Schlafke, J. H. Sondericker and K. C. Wu, RHIC Project, Technical Note AD/RHIC-25, May 14, 1987.
3. Process Performance and Carnot Efficiency for RHIC Refrigerator, K. C. Wu, RHIC PROJECT, Technical Note AD/RHIC/RD-74, Brookhaven National Lab. August, 1994.
4. Cold Vacuum Compressor for RHIC Helium Refrigerator, K. C. Wu, RHIC Project, Technical Note AD/RHIC/RD-51, BNL, 1992.
5. Cold Vacuum Compressor for RHIC Helium Refrigerator, K. C. Wu, RHIC Collier Ring Division Specification, Spec. No: RHIC-CR-E-3101-0028, December 18, 1992.
6. Brookhaven National Laboratory Helium Cold Gas Compressor, BNHEP-11, Installation, Operating, and Maintenance Manual, Nov. 1993, Barber-Nichols Inc.
7. Structure Analysis of Vacuum Vessel for RHIC Cold Vacuum Compressor, Memorandum K. C. Wu to Rudy Alforque, April 29, 1994.
8. Test Report for Helium Cold Gas Compressor, XBNHEP-11, December 1993, Barber-Nichols Inc.
9. Performance Requirement for the RHIC Circulating Compressors, K. C. Wu, RHIC Project, Technical Note AD/RHIC/RD-53, BNL, February, 1992.
10. Circulating Compressor for RHIC, K. C. Wu, RHIC Collier Ring Division Specification, Spec. No: RHIC-CR-E-3401-0034, March 25, 1993.
11. Brookhaven National Laboratory Liquid Helium Pump, BNHEP-12, Installation, Operating, and Maintenance Manual, Nov. 1993, Barber-Nichols Inc.
12. Test Report for Supercritical Helium Pump, BNHeP-12-000, December 1993, Barber-Nichols Inc.

The drawings related to the modification of Cold Box 5 for RHIC Refrigerator are listed below:

Drawing	RD3A995009, Rev. A, 25 kW Helium Refrigerator P & ID
	31015075, Rev. A, Isometric Cold Box 5
	31015076, Rev. A, Cold Box 5 Modifications
	31015074, Rev. A, Assembly Compressor Box
	31015065, Rev. B, Assembly Cold Box Weldment

Appendix I: Plan for Pneumatic Test

1. Line H130A to C2 - to be tested to 125 psi.

To isolate line "H130A to C2", the following valves must be opened or closed as shown below. The relief valves associated with this spool must be disconnected for the test. Have personnel in front of the process control computer to monitor the pressure reading on Page D35 to make sure the lines are properly isolated. Pressurized the line to 125 psig via REGEN Gas Supply header through H138M.

Valve	Position	Description
H130A	Close	to be connected to magnet return
H168M	Open	down stream of H130A
H131A	Open	down stream of H168M, to be connected to C2
H138M	Open	from REGEN Gas Supply
H58A	Open	from Low Pot Return
H54A	Close	from Intermediate Pot Return
H449M	Open	C2 Suction
H450M	Open	C2 Dsicharge
H69A	Open	C2 By-Pass
H40A	Open	C2 By-Pass
H38A	Close	to Cold Box 4
H33M	Close	Cooldown By-Pass
H451M	Close	Differential Pressure Gauge at C2
H452M	Close	Differential Pressure Gauge at C2
H57M	Close	From Pure Helium Source
H63M	Close	Pressure Gauge PT63H
H66M	Close	Differential Pressure Gauge for
H65M	Close	Venturi Flow Meter FT64H
H45M	Close	Pressure Gauge PT45H
H43M	Close	Differential Pressure Gauge for
H42M	Close	Venturi Flow Meter FT41H
H212M	Close	Differential Pressure Gauge for
H213M	Close	Venturi Flow Meter FT211H
H44M	Close	to RVH
H122M	Close	Low Pot By-Pass
H114A	Close	Low Pot Fill Line
H113M	Close	Pressure Gauge PT113H
H181M	Close	Low Pot Drain
H89M	Close	to By-Pass
H46R	Disconnect	Temporary
H48R	Disconnect	Temporary
H454R	Disconnect	Temporary
H59R	Disconnect	Temporary
H52R	Disconnect	Temporary

2. Line Magnets to H168M - to be tested to 375 psi

To isolate line "Magnets to H168M" from the rest of piping system, the following valves must be opened or closed as shown. All relief valves must be disconnected for the test. Have operating personnel in front of the process control computer to monitor the pressure reading on Page D35 to make sure the lines are properly isolated and in no danger to over pressure the low pressure lines. Pressurized the line to 375 psi using pure helium via H139M.

Valve	**Position**	**Description**
H147A	Close	from Magnet
H123M	Close	Cooldown By-Pass
H130A	Open	to suction line of C2
H168M	Close	to avoid leakage through H130A
H131A	Close	Pre-caution against leakage through H130A & H168M
H187M	Close	to Calorimeter
H173M	Close	to Calorimeter
H1100M	Close	to Thermax Heater
H143M	Close	Pressure Gauge PT143H
H177M	Close	Differential Pressure Gauge for
H176M	Close	Venturi Flow Meter FT175H
H139M	Open	
H138M	Close	Pre-caution
H124R	Disconnect	Temporary
H140R	Disconnect	Temporary
H148R	Disconnect	Temporary, Precaution

Appendix II: Summary of K. C. Wu's Memorandum to Rudy Alforque - Reference 7

MEMORANDUM

DATE: April 29, 1994

TO: Rudy Alforque

FROM: K. C. Wu

SUBJECT: **STRUCTURE ANALYSIS OF VACUUM VESSEL FOR RHIC COLD VACUUM COMPRESSOR**

1). Code Requirement

According to U-1 C.8 of the ASME Pressure Vessel Code Section VIII, Division 1, vacuum vessels are not considered to be within the scope of this Division. However calculations have been performed to show that the present design follows the general intent of the code.

2). Vessels of Rectangular Cross Section

Vessels of rectangular cross section are given in Appendix 13 of ASME Boiler & Pressure Vessel Code Section VIII, Division 1. The design equations are for vessels in which the aspect ratio is greater than 4. For vessels with aspect ratio less than 4, the sideplates are strengthened by the interaction of the end enclosures and may be designed in accordance with the provisions of U-2(g).

3). Wall Thickness According to Appendix 13

The wall thickness of this vessel is calculated according to the formula given in Section 13-7, Vessel of rectangle cross section in Appendix 13. Both membrane, bending and total stress at locations N, Q and M, as shown in sketch 1 of Fig. 13-2(a), have been calculated for an internal pressure of 15 psi. The stability criteria for the vessel under external pressure are checked according to procedures given in Section 13-14. The calculation was performed on spread sheet. A 1" wall thickness is found to have a maximum stress of 14.4 Ksi for the cross section of 42" x 48".

4). Maximum Stress from Finite Element Analysis

A finite element analysis is performed to find the maximum stress for the structure. The maximum stress is found to be 15.4 Ksi.

5). Material

The material is SA-516 Grade 70 steel. The allowable stress is 17.5 Ksi and the yield point is 30 Ksi.

6). Welding of Side Plates

The vacuum vessel will be welded according to Sketch (c) of Fig. UW-13.2 No radiographic examination will be required.

7). Bolts and Cover Plates

The bolts and cover plates have been analyzed according to the Rules for Bolted Flange Connection with Ring Type Gaskets given in Appendix 2. 24 - 3/8 bolts are found to be appropriate for the present design. Although only 1/2 " is required for the cover plate, 3/4" plate will be used to avoid weakening of the vessel plate.