AD/RHIC/RD–89

RHIC PROJECT

Brookhaven National Laboratory

Analysis of Eddy Currents in a Resistive Coating of the Injection Kicker Beam Tube

H. Hahn, E. B. Forsyth, N. Tsoupas

April 1995

ANALYSIS OF EDDY CURRENTS IN A RESISTIVE COATING OF THE INJECTION KICKER BEAM TUBE

H. Hahn, E. B. Forsyth, N. Tsoupas

INTRODUCTION

With the goal of reducing the coupling impedance of the RHIC kicker, the possibility of applying a low-resistivity coating to the inside of the ceramic beam tube is being considered.[1] The coating thickness required to suppress the coupling impedance is significantly heavier than that required to prevent electrostatic charge collection, and its impact on other kicker parameters requires careful consideration. A continuous coating, rather than longitudinal stripes, with low surface resistivity, $R_{sq} \sim 4\ \Omega$, of the coating is desirable from the point of view of coupling impedance reduction.[2,3] Several arguments against the use of continuous coating have been advanced, the obvious contraindications being the slowing of the kicker rise time due to the induced eddy currents and the heating due to the beam image currents,[4,5] also the distortion of the electric field and possibility of electric breakdown.

The impact on kicker rise time of a *lumped kicker* with coated beam tube is adequately described by the time constant T_E for the decay of the eddy currents in the coating[4]

$$T_E = \frac{1}{2}\mu_0 \frac{b}{R_{sq}} \tag{1}$$

with b the radius of the coating and the surface resistivity

$$R_{sq} = \frac{1}{\sigma d} \tag{2}$$

where d is the thickness and σ the conductivity of the coating.

For a linearly rising external field $B_0 = \dot{B}t$, the interior field grows according to

$$B_i = \dot{B}\left(t - T_E + e^{-t/T_E}\right)$$

which, after several time constants, is again linearly rising, but delayed by T_E. If the external field rises as $B_0 = \dot{B}\left(t - T_B + e^{-t/T_B}\right)$ then the internal field grows as

$$B_i = \dot{B}\left(t - T_E - T_B + \frac{T_B^2}{T_B - T_E}e^{-t/T_B} + \frac{T_E^2}{T_E - T_B}e^{-t/T_E}\right)$$

which shows a delay by $T_E + T_B$.

The study of effects due to the coating in a *transmission line kicker*, such as under construction for RHIC, can be expected to require a dynamic treatment, which allows for the propagation of the field pulse along the beam tube. An analytical treatment carried out in the frequency domain for a suitably simplified geometry is presented in the next section of this report.

A more heuristic approach involves an equivalent circuit representation of the kicker, similar to the periodically loaded transmission line previously analyzed,[6,7] but further simplified by the exclusive use of lumped elements. The values for the circuit elements can be obtained from the low frequency approximation to the analytical results or a two-dimensional analysis using numerical programs such as OPERA.

Using the two-dimensional programs, the transformer effect between exciting conductor and beam tube coating is obtained from an AC analysis based on the actual kicker cross section, including the wall thickness and dielectric constant ($\epsilon_r \sim 5$) of the ceramic beam tube. The coating will distort the transverse electric field which can be estimated from an electrostatic calculation, with the coating having uniform potential. The coating adds a small capacity between the exciting conductors; a transverse resistance in series with this capacitor determines the time constant associated with the distortion of the electric field.

The distortion of the electric field results in a significant enhancement of the electric field and may well become the limit on the achievable kicker strength and, in practice, precluded the use of a uniform coating.

TRANSMISSION LINE ANALYSIS

In the absence of the ceramic beam tube, the propagation of the kicker pulse in the gap is in good approximation given by[6,7] (SI units)

$$\begin{aligned} E_x &= vB_0 \cosh \eta y e^{-j\kappa z} e^{j\omega t} \\ H_y &= \frac{1}{\mu_0} B_0 \cosh \eta y e^{-j\kappa z} e^{j\omega t} \\ H_z &= -\frac{j}{\mu_0} B_0 \frac{\eta}{\kappa} \sinh \eta y e^{-j\kappa z} e^{j\omega t} \end{aligned} \tag{4}$$

with

$$\begin{aligned} \omega &= v\kappa \\ \eta^2 &= \kappa^2 - \left(\frac{\omega}{c}\right)^2 = \kappa^2 \left(1 - \frac{v^2}{c^2}\right) \end{aligned} \tag{5}$$

and

$$B_0 = \mu_0 \frac{I}{2a} \tag{6}$$

where I is the exciting current, $2a$ the gap height, v the propagation velocity. Furthermore, the characteristic impedance is

$$Z_c \approx \frac{v}{c} Z_0 = \mu_0 v \tag{7}$$

the transverse electric field

$$E_0 \approx vB_0 \tag{8}$$

and the required kicker voltage, assuming a gap width equal to the gap height

$$U = Z_c I \approx v\mu_0 I = 2avB_0 \tag{9}$$

The impact of the coated beam tube on the kicker pulse can be estimated by a perturbation treatment which assumes a beam tube diameter $\ll 2a$, negligible ceramic wall thickness, and hence an essentially unchanged pulse propagation velocity.

Changing to a cylindrical coordinate system which is appropriate for the circular beam tube, one can write the fields in the long-wavelength approximation where the modified Bessel function $I(\eta r) \approx \frac{1}{2}\eta r$, etc. as (natural units, $c = \mu_0 = 1$)
- inside the coating, $0 < r < b$,

$$
\begin{aligned}
E_r &= \left(vB_0 - vq^H - \frac{1}{v}q^E\right)\cos\varphi \\
E_\varphi &= -\left(vB_0 - vq^H - \frac{1}{v}q^E\right)\sin\varphi \\
E_z &= j\frac{1}{v}\left(1-v^2\right)\kappa r q^E \cos\varphi \\
H_r &= \left(B_0 - q^H - q^E\right)\sin\varphi \\
H_\varphi &= \left(B_0 - q^H - q^E\right)\cos\varphi \\
H_z &= -j\left(1-v^2\right)\kappa r\left(B_0 - q^H\right)\sin\varphi
\end{aligned} \tag{10}
$$

- and outside the coating, $b < r < a$,

$$
\begin{aligned}
E_r &= \left(vB_0 + v\frac{b^2}{r^2}q^H + \frac{1}{v}\frac{b^2}{r^2}q^E\right)\cos\varphi \\
E_\varphi &= -\left(vB_0 - v\frac{b^2}{r^2}q^H - \frac{1}{v}\frac{b^2}{r^2}q^E\right)\sin\varphi \\
E_z &= j\frac{1}{v}\left(1-v^2\right)\frac{\kappa b^2}{r}q^E\cos\varphi \\
H_r &= \left(B_0 - \frac{b^2}{r^2}q^H - \frac{b^2}{r^2}q^E\right)\sin\varphi \\
H_\varphi &= \left(B_0 + \frac{b^2}{r^2}q^H + \frac{b^2}{r^2}q^E\right)\cos\varphi \\
H_2 &= -j\left(1-v^2\right)\left(\kappa r B_0 + \frac{\kappa b^2}{r}q^H\right)\sin\varphi
\end{aligned} \tag{11}
$$

where the common factor $e^{j\kappa z}e^{j\omega t}$ has been suppressed.

The expansion coefficients are obtained by field matching, taking into account the eddy current in the coating as follows

$$
\begin{aligned}
q^H &= -\left(1 - j\frac{1-v^2}{v}\frac{\kappa b}{2R_{sq}}\right)q^E \\
q^E\left\{1 + \left(1-v^2\right)\kappa^2 b^2 + jv\kappa b\left(2R_{sq} + \frac{1}{2R_{sq}}\right)\right\} &= \frac{v^2}{1-v^2}B_0
\end{aligned} \tag{12}
$$

Of special interest is the eddy current induced magnetic field inside the coated beam tube which is given by

$$
q^H + q^E = \frac{j\kappa b v B_0}{2R_{sq}\left[1 + \left(1-v^2\right)\kappa^2 b^2\right] + jv\kappa b\left(1 + 4R_{sq}\right)} \tag{13}
$$

As expected,

$$q^H + q^E = \begin{cases} B_0; & R_{sq} = 0 \\ 0; & R_{sq} = \infty \end{cases} \tag{14}$$

The current density in beam direction in the coating is

$$i_z = \hat{i}_z \cos\varphi = \frac{1}{R_{sq}} E_z = j\frac{1-v^2}{v}\frac{\kappa b}{R_{sq}} q^E \cos\varphi \tag{15}$$

The current in the half coating is

$$I_z = \int_{-\pi/2}^{\pi/2} i_z b d\varphi = 2_b \hat{i}_z \tag{16}$$

or explicitly

$$I_z = \frac{j\omega \frac{\pi}{4}\frac{b}{a}}{\frac{\pi}{4}\frac{R_{sq}}{b}\left[1 + (1-v^2)\kappa^2 b^2\right] + j\omega\frac{\pi}{8}\left(1 + 4R_{sq}^2\right)} I \tag{17}$$

which in the long-wavelength limit $\kappa b \ll 1$ and for $R_{sq}/Z_0 \ll 1$ reduces to

$$I_z \approx \frac{j\omega M}{R_z + j\omega L_z} I \tag{18}$$

with (SI units)

$$\begin{aligned} R_z &\approx \frac{\pi}{4}\frac{R_{sq}}{b} \\ L_z &\approx \mu_0 \frac{\pi}{8} \\ M &\approx 2\frac{b}{a} L_z \end{aligned} \tag{19}$$

The foregoing equation describes a 1:1 transformer with mutual inductance M, and secondary inductance L_z, terminated by a resistor R_z. The time constant of the eddy currents in z-direction is found to be

$$T_z = \frac{L_z}{R_z} = \frac{\mu_0}{2}\frac{b}{R_{sq}} \tag{20}$$

in agreement with the lumped kicker calculation Eq. (1).

The value of the resistor R_z is normalized to render the instantaneous loss per unit length by the expression

$$\frac{dP}{dz} = R_z I_z^2 = \int_0^{2\pi} R_{sq} i_z^2 b d\varphi = \pi b R_{sq} \hat{i}_z^2 \tag{21}$$

The transverse current density in the coating is

$$i_\varphi = \frac{1}{R_{sq}} E_\varphi = -\frac{1}{R_{sq}} \left(vB_0 - vq^H - \frac{1}{v} q^E \right) \sin\varphi$$
$$= -\frac{\left(1-v^2\right)\kappa^2 b^2 + j2\omega b R_{sq}}{R_{sq}\left[1+\left(1-v^2\right)\kappa^2 b^2\right] + j\frac{1}{2}\omega b\left(1+4R_{sq}^2\right)} vB_0 \sin\varphi \tag{22}$$

As intuitively expected,

$$(i_\varphi)_{R=\infty} = 0$$
$$(i\varphi)_{R=0} \approx j2\frac{\left(1-v^2\right)}{v}\omega b B_0 \sin\varphi \tag{23}$$

At low frequencies and taking into account the numerical values, the averaged transverse eddy current per unit length can be approximated by

$$I_\varphi \sim j\frac{\omega b}{va} U \tag{24}$$

which can be separated in the equivalent circuit by a transverse capacitor having the capacity per until length (SI units)

$$C_\varphi \sim \frac{\epsilon_0}{v}\frac{b}{a} \tag{25}$$

EQUIVALENT CIRCUIT ANALYSIS

Based on the above analysis of eddy currents induced in the beam tube coating, the equivalent circuit shown in Fig. 1 can be constructed. The values of the elements in one cell were estimated from the theoretical low-frequency approximation and verified, as far as possible, by numerical two-dimensional computations using the OPERA program.

Assuming a surface resistance of $R_{sq} = 4\ \Omega$, one finds for the circuit elements in one cell of length $\ell_{\text{cell}} = 7.5$ cm, and transverse dimensions $a = 4.76$ cm and $b = 4.12$ cm

$$\left.\begin{array}{l} L_1 \sim 93 \text{ nH} \\ C_1 \sim 146 \text{ pF} \end{array}\right\} \qquad \sqrt{L_1/C_1} = 25.2\ \Omega$$
$$R_1 \sim 1 \text{ m}\Omega \tag{26}$$

and

$$L_2 \approx \mu_0 \frac{\pi}{8} \ell_{\text{cell}} \sim 37 \text{ nH}$$
$$cf\ 53 \text{ nH (OPERA)}$$
$$M \approx 2\frac{b}{a} L_2 \sim 64 \text{ nH}$$
$$\kappa = M/\sqrt{L_1 L_2} \sim 0.912$$
$$R_2 \approx \frac{\pi}{2}\frac{\ell_{\text{cell}}}{b} R_{sq} \sim 10.1\ \Omega$$
$$C_2 \approx \frac{\epsilon_0 c}{v}\frac{b}{a}\ell_{\text{cell}} \sim 7 \text{ pF}$$
$$cf\ 5\text{pF (OPERA)} \tag{27}$$

with the eddy current time constant

$$T_E = L_2/R_2 \sim 5 \text{ nsec} \tag{28}$$

The theoretical analysis does not yield a simple expression for the shunt resistor R_3, but an estimate can be made based on the power dissipated at low frequency,

$$R_3 = R_\varphi \approx \frac{4}{\pi} R_{sq} \frac{b}{\ell_{\text{cell}}} \sim 1.4\ \Omega \tag{29}$$

The voltage signals at the terminating resistor of the equivalent circuit, representing a 7-cell, i.e. half-length, kicker are shown in Fig. 2, for the two cases of an uncoated and coated beam tube, with the input voltage rising linearly. An estimate for the time constant yields 6.3 nsec and 12.6 nsec for the uncoated and coated beam tube respectively. Simulating the RHIC conditions, the risetime of the applied voltage is 30 nsec. From Fig. 3, the 1-99% risetime of the voltage at the kicker termination is estimated to be $\sim 43 = (30 + 2 \times 6.3)$ nsec without coating and $\sim 55 = (30 + 2 \times 12.6)$ nsec with coating. Unexpectedly, the delay time is ~ 25 nsec in either case.

REFERENCES

1. V. Mane, S. Peggs and W. Zhang, 1995 Particle Accelerator Conf. and Intern. Conf. on High-Energy Accelerators, Dallas, Texas.
2. A. Piwinski, IEEE Trans. NS-24, 1364 (1977).
3. L. S. Walling, et al, Nucl. Instr. & Meth., A281, 433 (1989).
4. J. M. Peterson, SLAC Note CN-49 (1981).
5. S. S. Kurrenoy, Proc. 1993 Particle Accelerator Conf., Washington, DC, 3420 (1993).
6. H. Hahn, RHIC Tech Note AD/RHIC/RD-66 (1994).
7. H. Hahn and E.B. Forsyth, Proc. EPAC 1994, London, GB, p 2550.

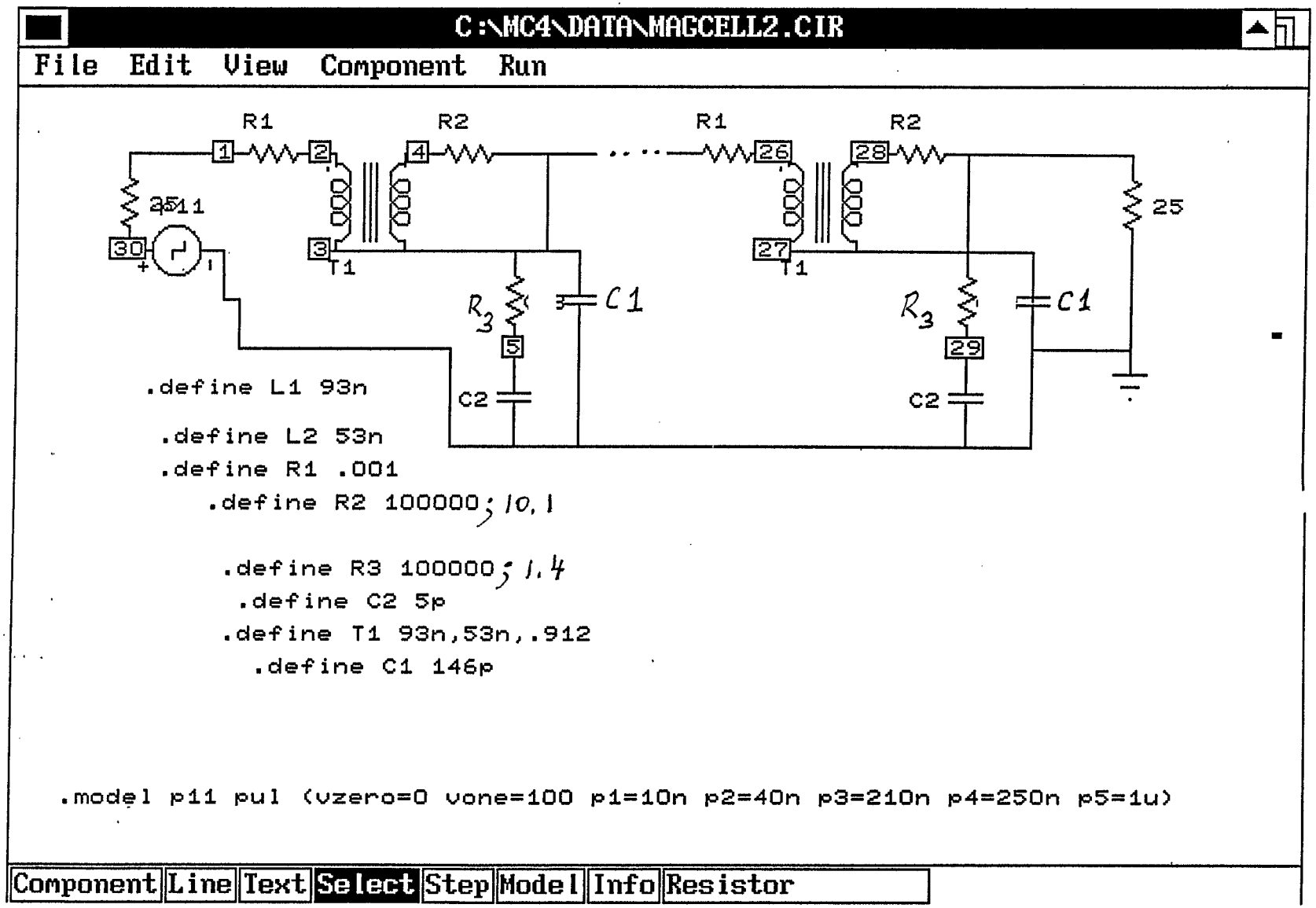
C:\MC4\DATA\MAGCELL2.CIR
File Edit View Component Run
R1
R2
R1
R2
1
2
4
26
28
25
30
3
T1
27
T1
R3
C1
5
C2
R3
C1
29
C2
.define L1 93n
.define L2 53n
.define R1 .001
.define R2 100000; 10.1
.define R3 100000; 1.4
.define C2 5p
.define T1 93n,53n,.912
.define C1 146p
.model p11 pul (vzero=0 vone=100 p1=10n p2=40n p3=210n p4=250n p5=1u)
Component Line Text Select Step Model Info Resistor

Fig. 1

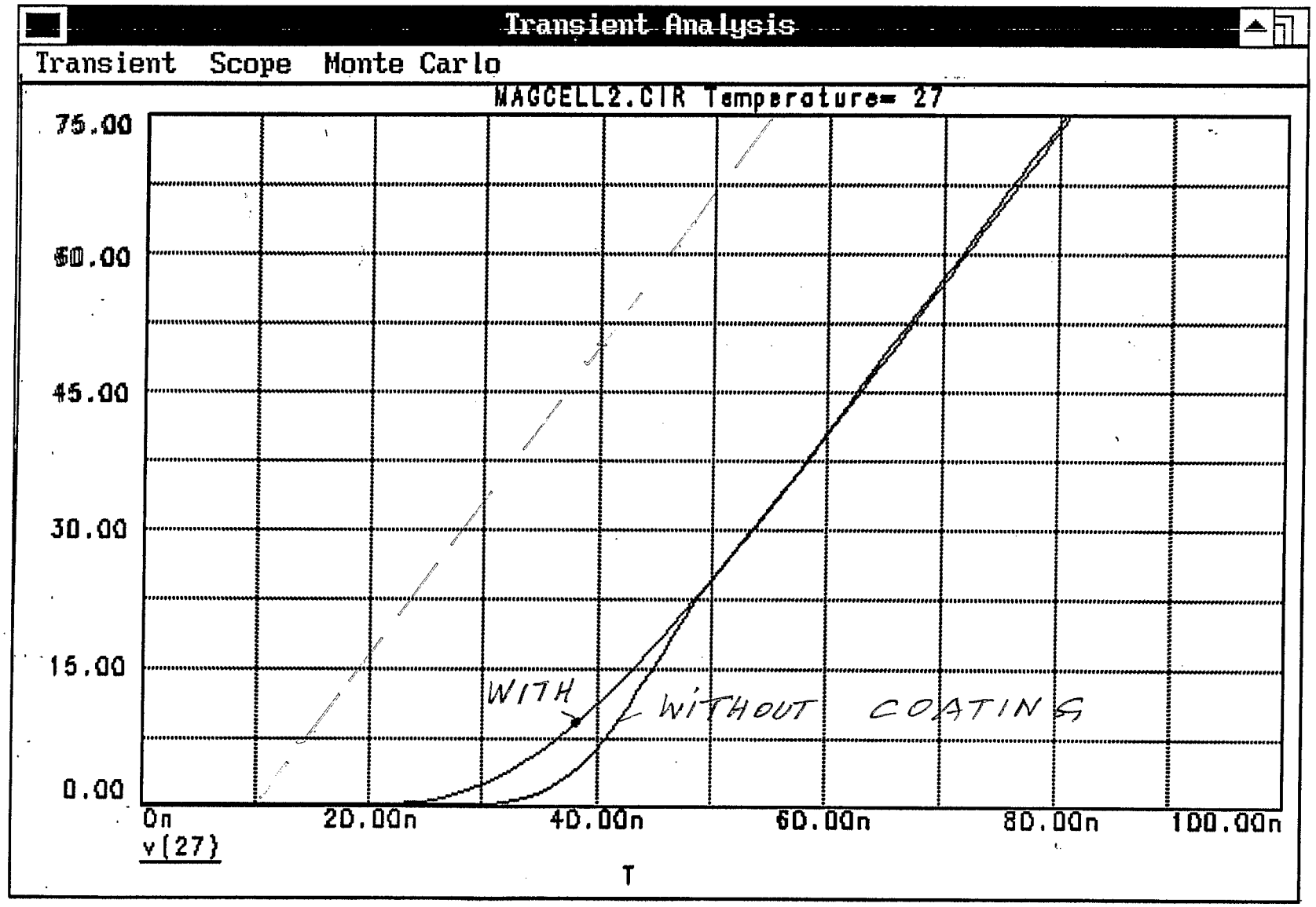
Transient Analysis
Transient Scope Monte Carlo
MAGCELL2.CIR Temperature= 27
75.00
60.00
45.00
30.00
15.00
0.00
0n
20.00n
40.00n
60.00n
80.00n
100.00n
v(27)
T
WITH
WITHOUT COATING

Fig. 2

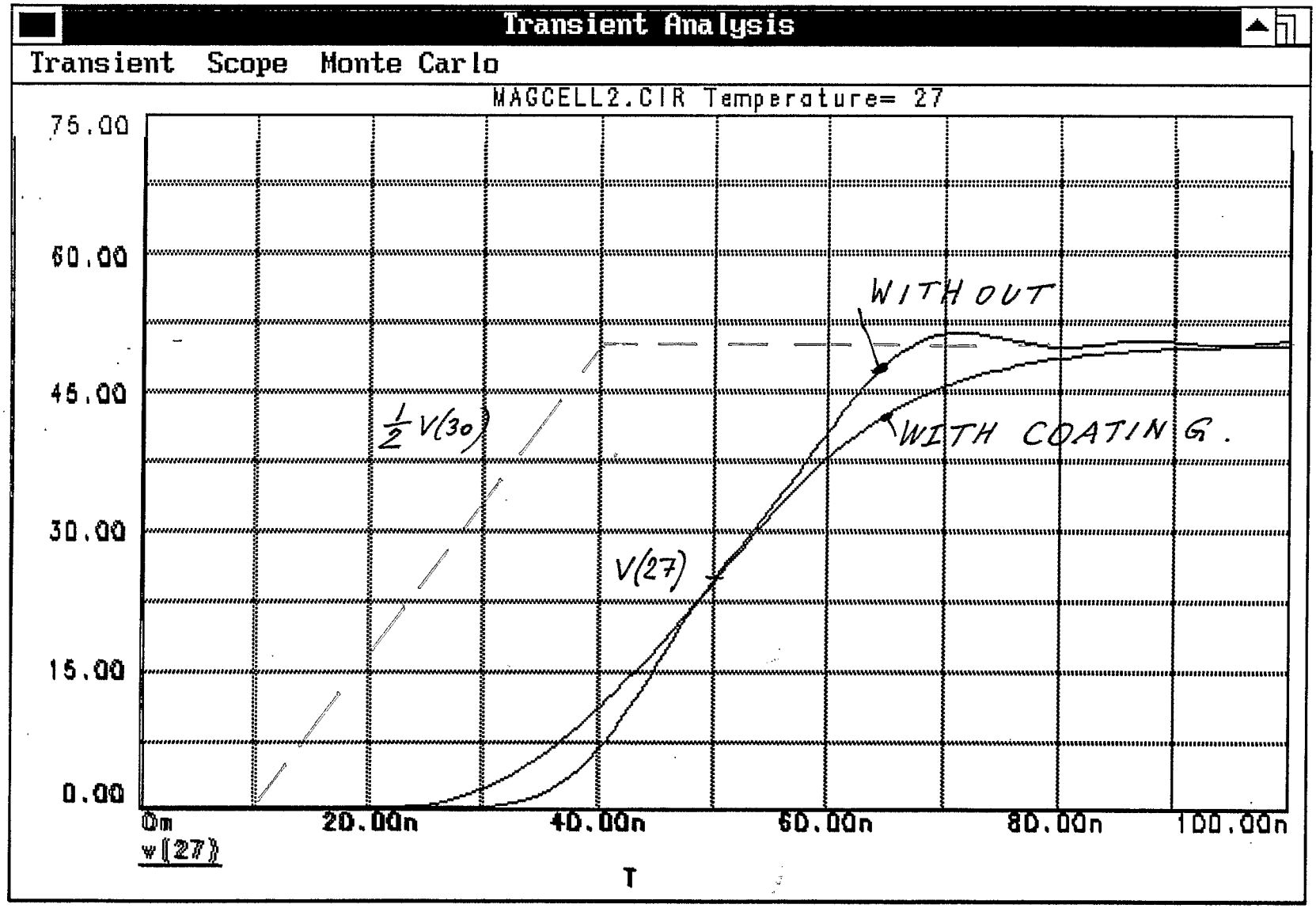
Transient Analysis
Transient Scope Monte Carlo
MAGCELL2.CIR Temperature= 27
75.00
60.00
45.00
30.00
15.00
0.00
0m
20.00n
40.00n
60.00n
80.00n
100.00n
v(27)
T
WITHOUT
WITH COATING.
½ V(30)
V(27)

Fig. 3