RHIC/AP/173

Applications of the RHIC AC Dipoles and Their Expected Performance

M. Bai, B. Parker, M. Meth
S. Peggs, T. Roser, D. Trbojevic

June 18, 1999

Abstract

Two AC dipoles with horizontal and vertical oscillating magnetic fields will be installed in RHIC. They will provide coherent oscillations for beam dynamic studies and betatron function measurements. The AC dipole with horizontal magnetic field will also be used to induce a full spin flip for RHIC polarized proton experiments. This note discusses the applications of the AC dipoles in RHIC and their expected parameters.

1 Applications of RHIC AC dipole

Two AC dipoles with horizontal and vertical magnetic fields will be installed in RHIC to excite a coherent oscillation in the transverse planes. Both magnets will be operated in an adiabatic fashion, namely being slowly energized and de-energized. Thus, a sustained coherent oscillation with a large amplitude can be obtained and the beam emittance can be preserved after the beam manipulation [1]. This has been demonstrated in the AGS polarized proton experiments [2] where a similar device (RF dipole) was employed to induce a strong coherent oscillation in the vertical plane to avoid the beam polarization loss when crossing strong intrinsic spin resonances.

In general, a coherent oscillation lasting thousands of revolutions around the accelerator is very useful for beam diagnosis and dynamic studies. For instance, by analyzing turn-by-turn data from two beam position monitors, one can to measure the ratio of the betatron amplitude functions at the two BPMs and the phase advance in between. Although the one-turn phase advance of the AC dipole driven oscillation is different from the phase advance due to the free intrinsic betatron motion, the transfer matrix between two BPMs which does not have the AC dipole in between remains unperturbed. This method can also be used to launch the beam to large amplitude and diagnose the nonlinearity in the ring [3, 4]. Since the duration of the coherence can be made very long, this analysis is expected to be very accurate.

In addition, the vertical AC dipole (horizontally oriented magnetic field) will also be used to induce a spin flip for RHIC spin physics experiment [5]. In this

application, the vertical AC dipole bends the spin vector away from the vertical direction every time when the beam passes the AC dipole. When the AC dipole frequency coincides with the spin precession frequency, the kicks on the spin vector from the AC dipole add up constructively. Thus, a spin flip is induced. In RHIC polarized proton acceleration, two full Siberian snakes will be installed in each ring to eliminate the spin depolarization resonance. In their presence, the spin precession tune[1] is independent of the beam energy.

2 Expected performance

Since the AC dipoles in RHIC will serve different uses, their frequency and field strength settings are application dependent. Table 1 lists relevant RHIC machine parameters such as circumferences, revolution frequency f_0 and betatron tunes.

Table 1: RHIC machine parameters

circumference	3833.845 m	Q_x	28.195±0.003
revolution frequency	78.196 kHz	Q_z	29.185±0.003

The ±0.003 is the nominal betatron tune spread based on RHIC design parameters [6]. It is derived from a momentum spread about 0.1% and a chromaticity $\Delta\nu/(\Delta p/p)$ of about -3 [6].

2.1 Excitation of coherent oscillations

In order to excite a coherent oscillation, the AC dipole frequency f_m has to be set close to the frequency of the intrinsic betatron oscillation f_z. For an accelerator with negligible non-linear magnetic fields, the amplitude of the excited coherent oscillation $Z_{\rm amp}(s)$ is given by

$$Z_{\rm amp}(s) \cong \frac{B_{\rm m}L}{4\pi B\rho\delta}\sqrt{\beta(s_0)\beta(s)}, \tag{1}$$

if the resonant proximity parameter $\delta = |\nu_m - \nu_z| = \frac{|f_m - f_z|}{f_0} \ll 1$. Here $B\rho$ is the magnetic rigidity and $\beta_z(s_0)$ and $\beta_z(s)$ are the betatron functions at the AC dipole location s_0 and at the observation point s. $B_m L$ is the amplitude of the AC dipole field strength $\Delta BL = B_m L \cos f_m t$.

The desired coherent oscillation amplitude in RHIC depends on the application. For measuring β functions and phase advances, about 1σ coherence amplitude is sufficient for the measurement, while about 5σ coherence is necessary

[1] number of precessions when particle finishes one circulation along the ring

for detecting nonlinear driving terms. Here, σ is the rms beam size at the AC dipole location. Table 2 gives the rms beam size for different species of particles at injection and also at top energy.

Table 2: The rms beam size for different particles accelerated in RHIC

species	energy (γ)	95% beam emittance [mm-mrad]	rms beam size (β=11 m)
gold (Au)	injection(12.6)	15π	1.48 mm
	top (108.4)	40π	0.82 mm
proton (p)	injection(31.2)	20π	1.08 mm
	top (268.2)	20π	0.37 mm

According to Eq. 1, the two AC dipole frequencies should be very close to the sidebands of the intrinsic betatron oscillation frequencies. For RHIC, the nominal betatron tune setting is $Q_x = 28.195$ and $Q_z = 29.185$ for the horizontal and vertical planes respectively. Thus, 63 kHz is chosen in the AC dipole prototype design which will be discussed later in the note. A continuous tuning range of about ± 4 kHz ($\Delta Q = \pm 0.05$) to satisfy the needs of nonlinear beam dynamic studies is also implemented in the design.

Although it is more efficient to run the AC dipole closer to the intrinsic betatron oscillation frequency to get a large amplitude, the resonance proximity parameter is limited by the tune spread in the beam. In the presence of nonlinear magnetic fields, the simple relation of Eq. 1 is no longer valid [7].

2.2 Spin manipulation

For the polarized proton acceleration in RHIC, two full Siberian snakes will be installed to eliminate the spin depolarization resonances in the ring [9]. In the presence of the two snakes with their axes perpendicular with each other, the spin precession tune becomes exactly 1/2 and is independent of the beam energy.

To reverse the spin vector, the spin precession tune has to be moved slightly away from the half integer (about $\Delta Q = 0.02$ in unit of the betatron tune) by adjusting the snake axis. The frequency of the vertical AC dipole has to be ramped through the spin tune slowly enough so that a spin flip can be induced. In this case, the AC dipole frequency will be tuned at 37.53 kHz and should have a tuning range of about ± 2.0 kHz.

The rate of the AC dipole frequency ramp is related to its field strength. Based on the Froissart-Stora formula, the beam polarization after passing through an isolated spin resonance with strength ϵ_K is given by

$$P_f = (2e^{-\pi|\epsilon_K|^2/2\alpha} - 1)P_i \tag{2}$$

Table 3: Expected AC dipole parameters for different applications

application	desired Z_{amp}	B_mL [G-m]	center frequency f_m [kHz]	tuning range [kHz]	Duty time
spin flipper		100	Vert: 37.5±0.15	±2.5	2.4 s
measure β and phas	1σ @top energy $\delta = 0.01$	78	Hori: 63.95±0.15 Vert: 63.73±0.15		40 ms
non-linear dynamics	5σ @top energy $\delta = 0.01$	380	Hori: 63.95±0.15 Vert: 63.73±0.15	±5.0	80 ms

where P_i is the beam polarization before passing through an isolated spin resonance and α is the resonance crossing rate. In the presence of an AC dipole with horizontal oriented magnetic field, an artificial spin resonance is induced at the AC dipole magnetic field oscillating frequency. The corresponding resonance strength ϵ_K is given by

$$\epsilon_K = \frac{1 + G\gamma}{4\pi} \frac{B_m L}{B\rho}, \tag{3}$$

where $B_m L$ is the oscillating amplitude of the vertical AC dipole integrated field strength and the resonance crossing rate α is

$$\alpha = \frac{1}{2\pi} \frac{d\nu_m}{dn}, \tag{4}$$

where ν_m is the AC dipole tune and n is the turn number. To achieve more than 99% spin flip, the following relationship has to be fulfilled.

$$\epsilon_K > 1.84\sqrt{\alpha}. \tag{5}$$

In summary, Table 3 shows the AC dipole parameters.

3 RHIC AC dipole system

The two AC dipoles will be installed in the IP3 region just beside the AC quadrupole [10]. Fig. 1 is a schematic drawing of their location.

Both dipoles will be used to excite a coherent oscillation while only the AC dipole with horizontal magnetic field will be used in manipulating the spin for RHIC spin physics. Since the frequency for the beam manipulation and spin flipping are significantly different, it is difficult to cover both frequencies in a single resonant bandwidth. Instead, it is desirable to pursue a high Q-factor

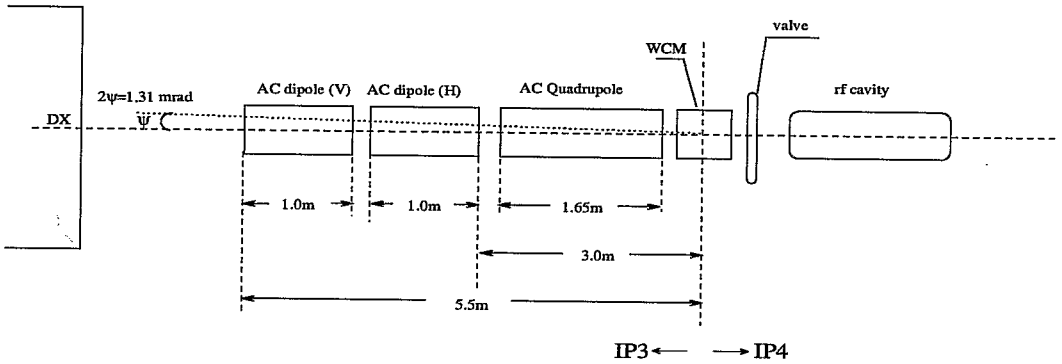

Figure 1: Schematic drawing of RHIC AC dipoles location at IP4. WCM stands for the wall current monitor and ψ is the common crossing angle when protons collide with gold ions

magnet with a resonant circuit for the horizontal AC dipole and two sets of resonant circuits for the two different vertical AC dipole operation modes. The power supply for the AC dipole is required to cover the frequency range of the AC dipole. An impedance matching circuit is also needed to match the power supply output impedance with the magnet impedance if they are not the same.

3.1 Magnet

For the non-linear beam dynamic studies, one needs a very strong magnetic field to send beam to 5σ and the ability to sweep the AC dipole frequency in a certain range. These two conditions are not compatible with each other for a ferrite or other magnetic material dominated magnet when the total dissipated power is limited to a few kilo watts. To achieve this, an air-core magnet with a piece of magnetic material set beside the coil has been pursued. This type of magnet can have very high Q-factor while its resonant frequency can still be continuously tuned in a certain range. Figure 2 is the schematic drawing of the air-core magnet. The pseudo $\cos\theta$ shaped coil is for the concern of the field quality, and is made of a special type of wire (Litz Wire) which consists of many thin strands to eliminate eddy current effects.

The magnet air gap should be sufficient to accommodate a beam pipe with > 40 mm aperture which satisfies the RHIC $\pm 10\sigma$ rule. The material of the beam pipe has to allow the oscillating field to penetrate through it. One option is to use the coated ceramic beam pipes ($53''$ (length)$\times 1\frac{5}{8}''$ (ID) $\times 1\frac{7}{8}''$ (OD)) which are spares for RHIC injection kicker magnets. However, the coating of those beam pipes are high impedance materials and are not able to conduct the image current of the beam. Although the image current can be conducted along the aluminum box, further studies are necessary to check that the impedance of the box is sufficiently low and also that the box will not resonate at frequencies which damage the beam motion. The inductance of the magnet is determined by

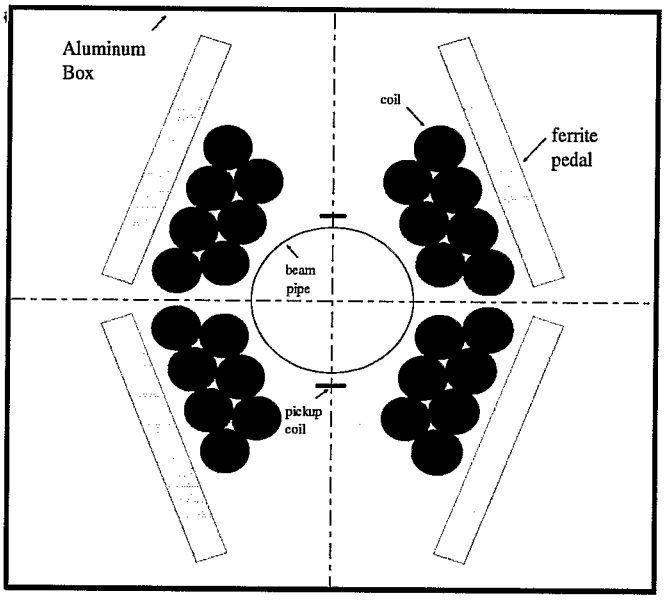

Figure 2: Schematic drawing of the air-core magnet. The magnet is shielded by an aluminum box to prevent the magnetic field from leaking out to the open space. The ferrite location is adjusted by a motor to sweep the frequency.

the magnet geometry and the coil configuration. Table 4 lists the geometry and electrical parameters of the dipole.

The tuning range of about 8% is achieved by adjusting the ferrite paddles beside the coils. Figure 3 shows the AC dipole frequency as a function of the ferrite paddle position. Different positions of this ferrite paddle change the magnet inductance so that the magnet frequency can be swept.

However, due to the inductance change, the current has to be adjusted in order to obtain a constant magnetic field. An amplitude feedback loop is needed to compensate the field change for different ferrite positions. Two small pick-up coils can be placed just outside the beam pipe and the current will be adjusted automatically according to the change of the magnetic field oscillation amplitude.

3.2 Electrical system

The RHIC AC dipole electrical system consists of two independent resonant circuits. Each of them is capacitively tapped to load the power supply cable in its surge impedance of 50 Ω. The horizontal AC dipole is tuned at a fixed frequency of 63 kHz for coherence excitation, while the vertical AC dipole can be tuned at

Table 4: AC dipole magnet parameters @ fixed B=350 Gauss

magnetic length	1.07 m		37 kHz	63 kHz
ferrite	$\mu > 100$, low losses	inductance $[\mu H]$	104.2	26.05
container	aluminum box	capacitance $[\mu F]$	0.173	0.245
cooling	none	capacitor size [k-VAR]	812.0	1932.0
		# of turns	14	7

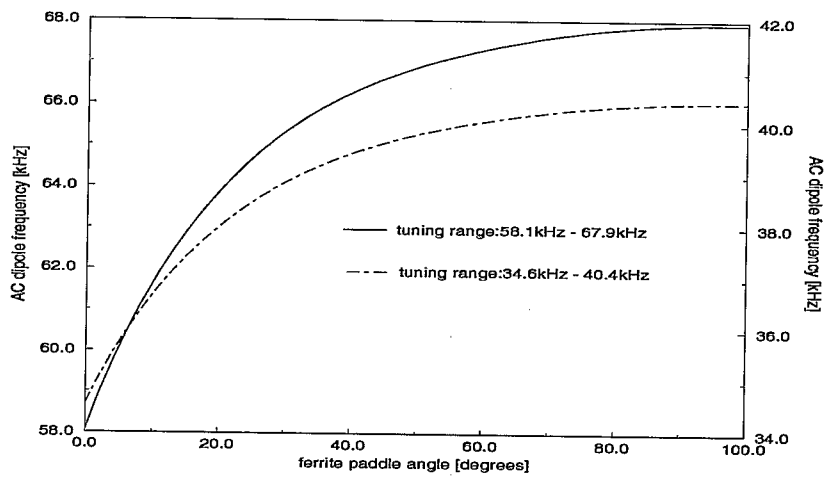

Figure 3: AC dipole frequency tuning by adjusting the ferrite paddle angle.

the same frequency as well as 37.5 kHz for spin applications. The coils of the vertical AC dipole can be connected either in series for the spin application or in parallel for the coherence excitation, and the horizontal dipole coils are permanently connected in parallel. Figure 4 is a schematic drawing of the AC dipole electrical system.

The coil arrangement is set by a multi contact relay that also sets the value of the tuning capacitors and the external resistive dissipation. This arrangement minimizes the capacitor voltage at the higher frequency. The power supply is a high-gain broadband power amplifier driven by a low level oscillation signal. The signal is obtained by multiplying the amplitude profile signal with an oscillating signal from a low level frequency modulated signal generator. The power amplifier is capable of 4500 watts. Each circuit is loaded to dissipate a total of 4500 watts to maximize the circuit bandwidth.

The AC dipole electrical system is contained in 4 distinct, interconnected units. Each dipole with tuning ferrite paddles is enclosed in an aluminum box

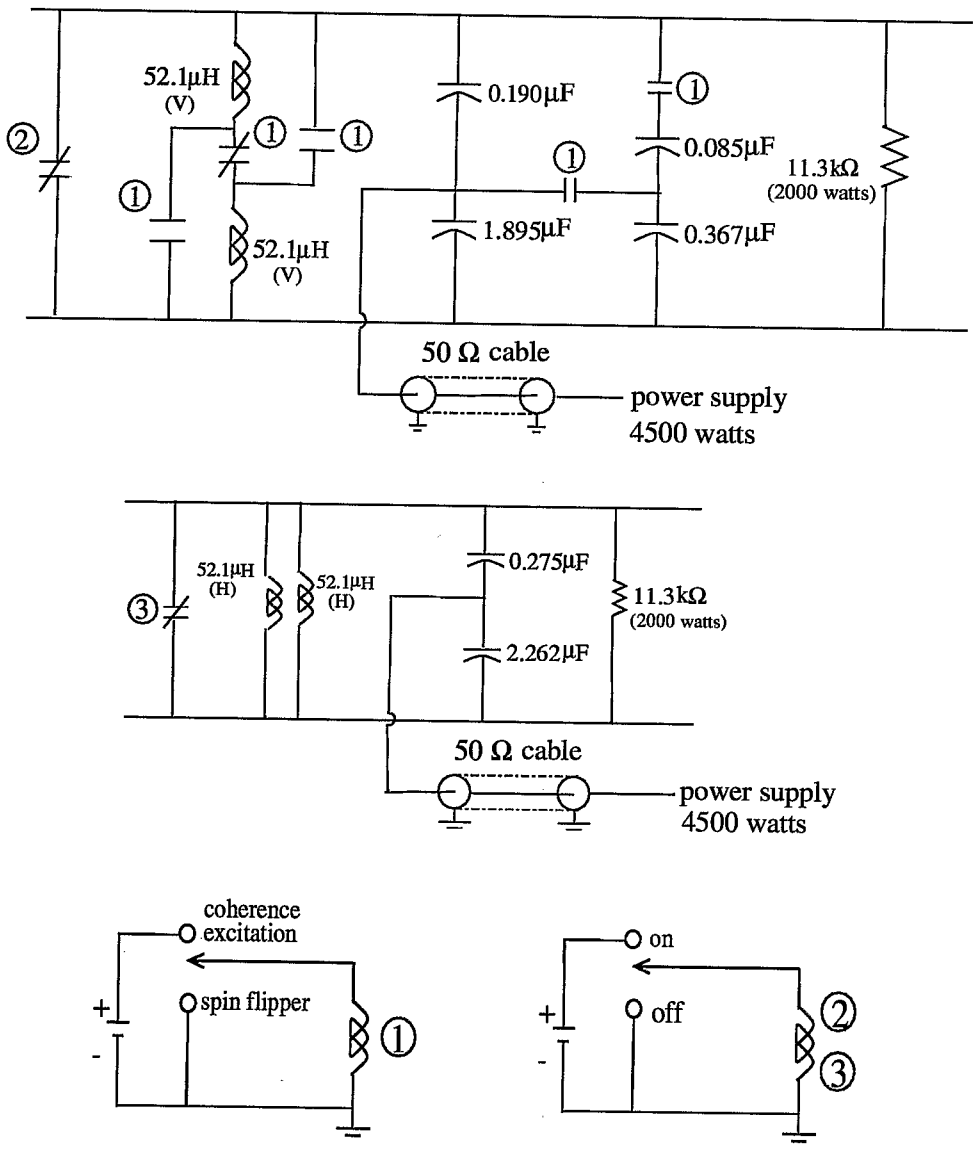

Figure 4: Schematic drawing of the AC dipole driving system. The top part is the vertical AC dipole which will be operated in two different modes by switching between the corresponding resonant frequencies. The circled 1, 2 and 3 stand for relays which contain holding coils and contactors. Relay 2 and 3 control the magnet on/off. Relay 1 controls the operation modes of the vertical AC dipole. The middle part is for the horizontal AC dipole which will be operated at a single frequency. The logic of the relays is shown as the bottom part of the figure.

Table 5: Change of the AC dipole system electrical parameters due to the frequency sweeping

nominal freq [kHz]	paddle angle [degrees]	resonant freq [kHz]	R_{in} [Ω]	3 DB bandwidth [Hz]	thermal drift $\Delta t = 10^0 c$	capacitor voltage [volts]	capacitor current [amps]
63	0.0	58.1	52.0	148.0	33.6	5504	492
	center	63.0	50.0	153.0	36.5	5816	564
	100.0	67.9	48.0	160.0	39.4	6080	636
37.5	0.0	34.6	50.7	151.0	20.0	5504	267
	center	37.5	50.0	153.0	22.0	5816	237
	100.0	40.4	48.7	157.6	23.4	6080	267

which shields the magnetic field from the outside environment. The capacitors and switching relay(s) for each magnet are contained in a second enclosure, adjacent to the magnet box. The power amplifier/signal generator combination with low level control will be housed and operated in the service building which is located near the tunnel. They are connected to the capacitor-relay enclosure via two 50Ω coaxial cables and three pairs of control wires (on/off and high/low frequency) for the holding coils in the three relays.

An amplitude feedback loop is required for each magnet to maintain a constant amplitude magnetic field as the frequency is swept. The AC dipole frequency sweeping is achieved by changing the ferrite paddle position as shown in Fig. 3. The low level signal generator will also be programmed to synchronously generate a corresponding frequency sweeping in the driving signal. Since the AC dipole resonant frequency is nonlinearly correlated with the ferrite paddle position, a lookup table containing the paddle position and the corresponding frequency is needed to obtain a linear frequency sweeping. Although the electrical and magnetic conditions are changed when the ferrite paddle is swept, the electrical parameters of the system are not sensitive to the angle of the ferrite paddle within the AC dipole tuning range as shown in Table 5. If necessary, a frequency feedback loop will be incorporated between each resonant circuit and the low level generator to maintain resonant operation. The phase difference between the power supply excitation and output voltage is measured and employed as an error signal to adjust the ferrite paddle to circuit resonances.

3.3 Control system

The AC dipole control program should allow us to

- turn on/off magnets
- switch between different modes, i.e. exciting a coherent motion or spin flipping.

- control the AC dipole amplitude profile
- control the AC dipole frequency profile
- control the AC dipole tuning paddle
- monitor the AC dipole signal

The philosophy of the AC dipole control program is to follow the standard RHIC control scheme. The AC dipole control program converts the AC dipole magnetic field amplitude and tune specified by user into the corresponding current amplitude and frequency. These will be passed to the standard RAMP manager which then generates a table of the AC dipole current and frequency as a function of time. The WFG (waveform generator) manager then controls two waveform generators through the WFG ADO (waveform generator Accelerator Device Object) to generate the analog signal of the AC dipole amplitude and frequency profiles from two RHIC standard 720 Hz waveform generators. Figure 5 is the AC dipole control program chart.

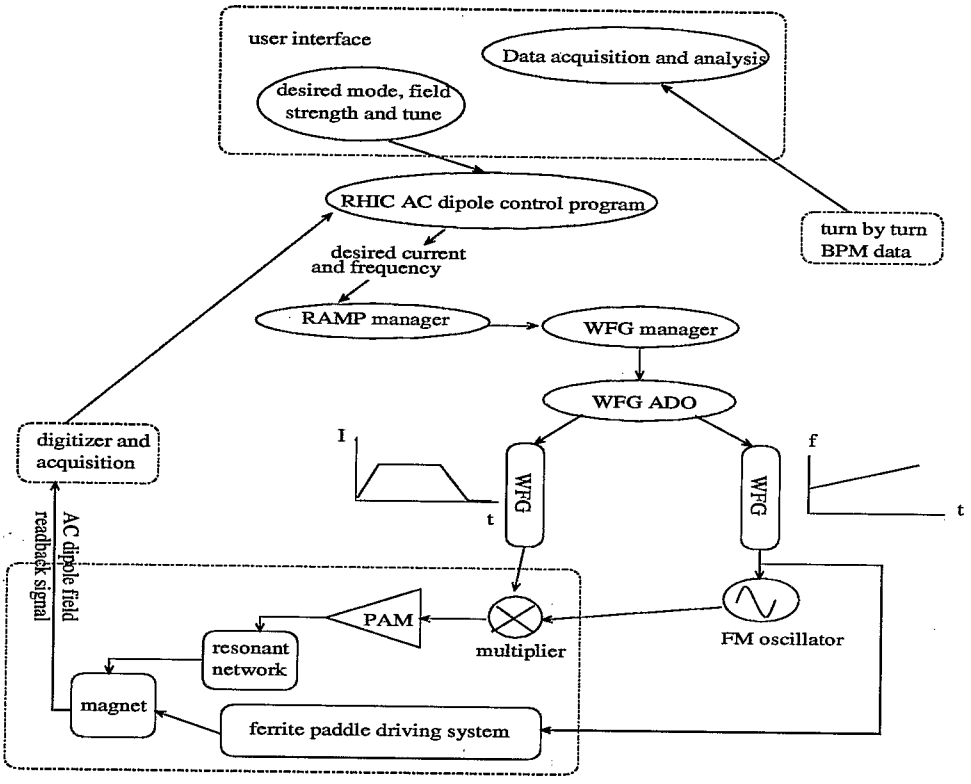

Figure 5: AC dipole control chart.

The analog frequency profile signal is applied to an FM oscillator which generates a continuous sinusoidal oscillation signal with constant amplitude. The frequency of this signal is determined by the frequency profile. Multiplying this

signal with the amplitude profile will then give us an amplitude modulated sinusoidal oscillation waveform. The AC dipole magnetic field read-back signal will not only be used in the amplitude feedback loop but also be digitized, sampled and sent to the AC dipole control program for monitoring.

The AC dipole ferrite paddle driving system is for continuously tuning the AC dipole resonant frequency. It consists of a servo motor and other mechanical subsystems. The motion of the servo motor will be remotely controlled to allow the AC dipole resonant frequency to sweep according to the desired frequency profile. Since the frequency dependence of the ferrite paddle angle is a nonlinear function, a look-up table of the frequency vs. ferrite angle is needed for the servo motor control program.

4 Conclusion

A complete RHIC AC dipole system of magnet, driving circuit and control system is proposed. The air-core AC dipole magnet is designed to achieve a maximum field strength amplitude of 380.0 Gauss-m at 63 kHz driven with a power supply of 4500 watts. The AC dipole frequency can also be swept by rotating the ferrite paddle set beside the coil. With these two AC dipoles in RHIC, we will be able to adiabatically excite coherent oscillations in the transverse plan for nonlinear beam dynamics studies and betatron function measurements. The AC dipole with horizontal magnetic field can also be switched to a frequency of 37 kHz to induce a full spin flip for RHIC spin physics experiments. Further studies about the beam impedance of the magnet are needed for the concern of beam instability.

References

[1] M. Bai *et al.*, Physical Review E, 5(1997).

[2] M. Bai *et al.*, Phys. Rev. Lett. **80**, 4673 (1998).

[3] S. Peggs, IEEE Particle Accelerator Conference and International Conference on High-Energy Accelerators, New York, 1999.

[4] S. Peggs and C. Tang, RHIC AP Tech. Notes: RHIC/AP/159, October 1998.

[5] T. Roser, *Handbook of Accelerator Physics and Engineering*, edited by A. Chao and M. Tigner.

[6] /home/owl/public/rhic.parameters.

[7] M. Bai *et al.*, AGS/RHIC/SN No. 055, May 1997.

[8] M. Froissart, and R. Stora, Nucl. Inst. Meth. **7**, 297 (1960).

[9] *RHIC Spin Physics Design Manual*

[10] W. Fischer *et al.*, RHIC AP Tech. Notes: RHIC/AP/164, February 1999

Appendix

Cost

Table 6 lists the expense items of the RHIC AC dipole system. An estimation of costs of major parts is shown in the table.

Table 6: Cost of RHIC AC dipole system

	item	unit	cost [$]
magnets	Litz wire	2000.0 ft	-
	aluminum box	-	-
	ferrite paddle	×8	15,000
	servo motor	2	-
	other mechanic parts	2 sets	-
	beam pipes	2	10,000
	labor	man hours	-
electrical system	capacitors	2 sets	35,000
	metal box	1	-
	power supply	2	25,000
	FM oscillators	2	2,000
	relays	3	-
	cables	-	-
	labor	man hours	-
controls	waveform generator	2 chans	-
	servo motor control cards	2 channels	6,000
total			-