RHIC/AP/174

BNL-Built LHC Magnet Error Impact Analysis

V. Ptitsin, S. Tepikian and J. Wei

Brookhaven National Laboratory, Upton, New York 11973

Abstract

This report summarizes results of the analysis of BNL-built dipole errors impact on the beam dynamics at LHC. The results for both proton and heavy ion LHC operations are listed.

1 Introduction

Superconducting magnets built at the Brookhaven National Laboratory will be installed in both the Insertion Region IP2 and IP8, and the RF Region of the Large Hadron Collider (LHC). In particular, field quality of these IR dipoles will become important during LHC heavy-ion operation when the β^* at IP2 is reduced to 0.5 meters. This note summarizes studies of the impact produced by the magnetic errors in BNL-built magnets on LHC performance at injection and collision, both for proton and heavy-ion operation. The basic parameters of proton and ion lattices used at the analysis are listed in Table 1.

Table 1: Lattice parameters.

Quantity	p inj.	p coll.	ion coll.
E [GeV]	450	7000	7000 per charge
ν_x/ν_y	63.28/59.31	63.31/59.32	63.31/59.32
ξ_x/ξ_y	2/2	2/2	2/2
ϵ_N [m·r]	3.75×10^{-6}	3.75×10^{-6}	1.5×10^{-6}
σ_p	4.7×10^{-4}	1.1×10^{-4}	1.14×10^{-4}

Two beam dynamic characteristic quantities are used to evaluate the error impact: the dynamic aperture (DA) and the tune footprint. The target values for the LHC are more than 12σ of average DA, more than 10σ minimum DA and less than 10^{-3} tune spread.

2 Tracking Setup

Fortran version of TEAPOT code was used for tracking studies. We restricted our investigation to 1000 turn tracking. Previous study indicates that 10^5 turn tracking further reduces DA by $0.5 - 1.\sigma$.

Ten seeds of magnet errors were created based on the error tables for all studied magnets (the errors of warm D1 dipoles at IR1 and IR5 also were included). We excluded from the consideration only sqew quadrupole component of the errors assuming that the coupling is completely compensated.

The working point at collision ($\nu_x = 63.31$, $\nu_y = 59.32$) and injection ($\nu_x = 63.28$, $\nu_y = 59.31$) are both close enough to the third integer resonance condition. Thus to avoid the decrease in dynamic aperture the machine has to be retuned to the nominal working point after the magnet errors are introduced to the lattice. Also the arc sextupoles are used to correct the chromaticity to the nominal values of 2.0 in both X and Y planes.

The tracking is 6 dimensional with the RF system operating at nominal values of RF voltage. The particles to track are taken with the initial 2.5σ energy deviation.

3 Dipole Error Analysis

BNL superconducting dipoles include interaction region beam separation magnets D1 for IR2 and IR8, interaction region magnets D2 for all 4 IRs, and RF insertion magnets D3A, D3B, D4A, D4B (Fig.1).

The magnet design is based on the RHIC arc dipole. However, due to the specific LHC requirements the magnets D2,D4A, D4B utilize 2-in-1 design with two magnet apertures in one yoke. Examples of 1-in-1 and 2-in-1 magnet designs fro BNL-built dipoles are shown in Figure 2.

The expected dipole error sets for all BNL-built dipole magnets at injection and collision used at the analysis are shown in Tables 2, 3, 4, 5, 6, 7, where b_2, a_2 present quadrupole components. These magnet tables were prepared on the basis of A. Jain's report [1] but use the reference radius 17mm which is the standard reference radius for the LHC magnet error tables.

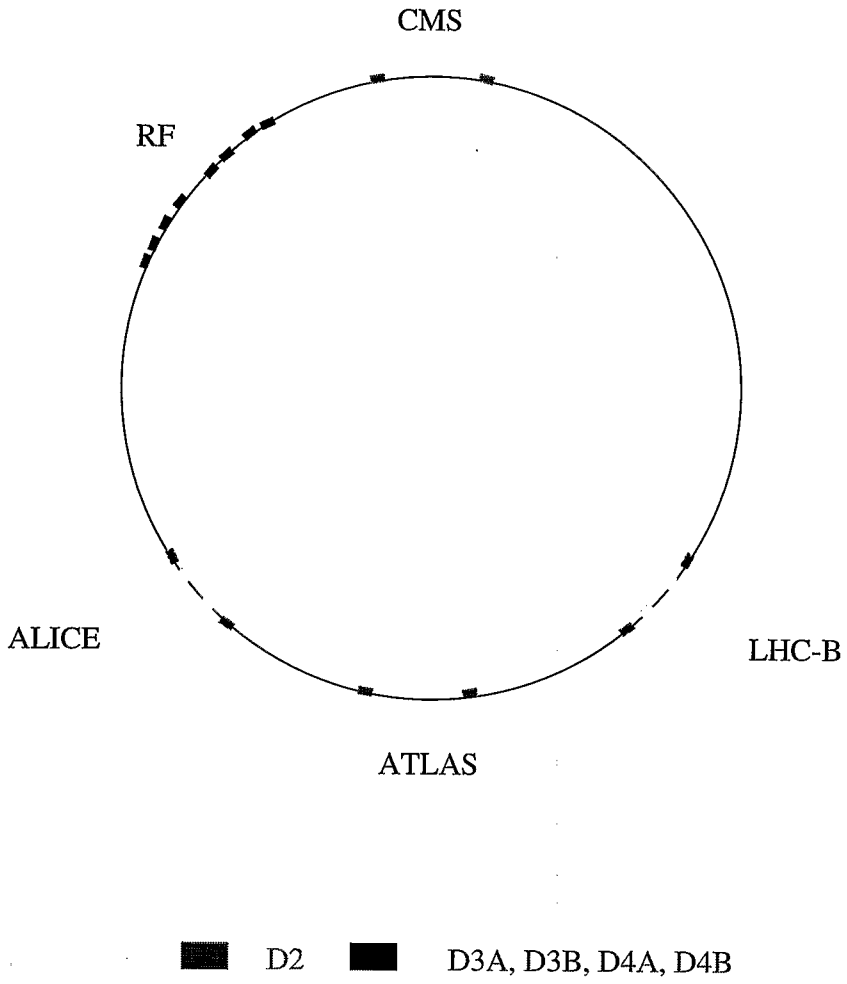

Figure 1: BNL-made dipoles at LHC ring

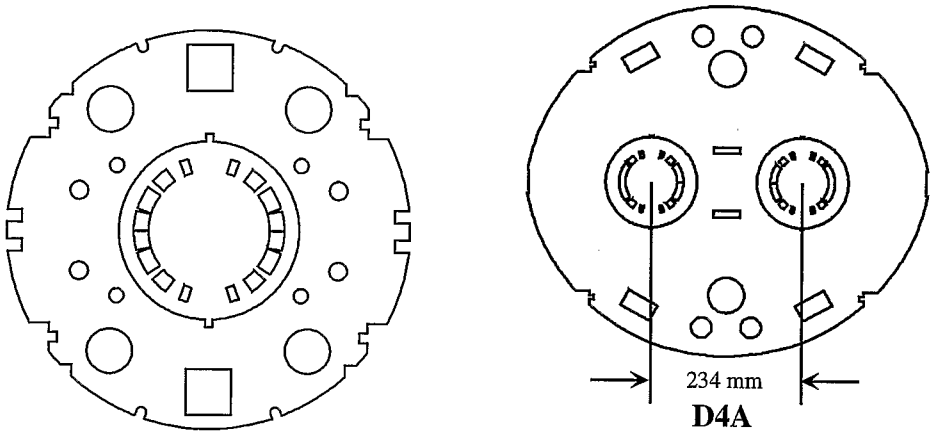

Figure 2: Magnet body cross section of BNL-built D1 and D4A.

Table 2: Expected D1 & D3 errors at collision (ver. 1.0). $R_0 = 17$ mm

n	Normal			Skew		
	$\langle b_n \rangle$	$d(b_n)$	$\sigma(b_n)$	$\langle a_n \rangle$	$d(a_n)$	$\sigma(a_n)$
Body	[unit]					
2	0.07	0.54	0.19	0.43	2.4	1.1
3	-1.5	1.6	0.84	-0.12	0.27	0.10
4	0.00	0.08	0.03	0.01	0.34	0.13
5	0.11	0.17	0.09	-0.01	0.04	0.01
7	0.11	0.02	0.01	-0.00	0.01	0.00
9	0.00	0.01	0.00	-0.00	0.00	0.00
LE	[unit·m]		(Length=0.73 m)			
2	-0.3	1.5	0.7	-1.0	2.9	1.2
3	10.3	1.4	0.5	-4.6	0.5	0.2
5	-0.1	0.2	0.1	0.5	0.1	0.0
RE	[unit·m]		(Length=0.73 m)			
2	0.2	1.2	0.5	0.6	3.1	1.3
3	2.8	1.2	0.5	0.1	0.5	0.2

Table 3: Expected D1 & D3 errors at injection (ver. 1.0). $R_0 = 17$ mm

n	Normal			Skew		
	$\langle b_n \rangle$	$d(b_n)$	$\sigma(b_n)$	$\langle a_n \rangle$	$d(a_n)$	$\sigma(a_n)$
Body	[unit]					
2	0.08	0.51	0.19	0.14	2.8	1.1
3	-6.3	2.5	0.92	-0.03	0.24	0.09
4	-0.02	0.07	0.03	0.04	0.37	0.13
5	0.14	0.18	0.09	-0.01	0.04	0.01
7	-0.04	0.02	0.01	0.0	0.01	0.0
9	0.01	0.01	0.0	0.0	0.0	0.0
LE	[unit·m]		(Length=0.73 m)			
2	-0.2	1.5	0.7	-1.6	2.9	1.1
3	8.7	1.3	0.5	-4.6	0.5	0.2
5	-0.1	0.2	0.1	0.5	0.1	0.0
RE	[unit·m]		(Length=0.73 m)			
2	0.2	1.3	0.5	-0.2	3.	1.1
3	1.8	1.1	0.5	0.1	0.5	0.2

Table 4: Expected BNL-built D2 & D4B errors at collision (ver. 1.0). $R_0 = 17$ mm

n	Normal			Skew		
	$\langle b_n \rangle$	$d(b_n)$	$\sigma(b_n)$	$\langle a_n \rangle$	$d(a_n)$	$\sigma(a_n)$
Body	[unit]					
2	0.06	0.54	0.19	0.41	2.4	1.1
3	-0.48	1.6	0.84	-0.03	0.27	0.10
4	-0.04	0.08	0.03	0.01	0.34	0.13
5	0.05	0.17	0.09	-0.01	0.04	0.01
7	-0.01	0.02	0.01	-0.0	0.01	0.0
9	0.00	0.01	0.0	-0.0	0.0	0.0
LE	[unit·m]		(Length=0.73 m)			
2	-0.3	1.5	0.7	-1.0	2.9	1.2
3	10.3	1.4	0.5	-4.6	0.5	0.2
5	-0.1	0.2	0.1	0.5	0.1	0.0
RE	[unit·m]		(Length=0.73 m)			
2	0.2	1.2	0.5	0.6	3.1	1.3
3	2.8	1.2	0.5	0.1	0.5	0.2

Table 5: Expected BNL-built D2 & D4B errors at injection (ver. 1.0). $R_0 = 17$ mm

n	Normal			Skew		
	$\langle b_n \rangle$	$d(b_n)$	$\sigma(b_n)$	$\langle a_n \rangle$	$d(a_n)$	$\sigma(a_n)$
Body	[unit]					
2	0.06	0.51	0.19	0.12	2.8	1.1
3	-5.7	2.5	0.92	-0.03	0.24	0.09
4	-0.02	0.07	0.03	0.04	0.37	0.13
5	0.14	0.18	0.09	-0.01	0.04	0.01
7	-0.04	0.02	0.01	0.0	0.01	0.0
9	0.01	0.01	0.00	0.0	0.0	0.0
LE	[unit·m]		(Length=0.73 m)			
2	-0.2	1.5	0.7	-1.6	2.9	1.1
3	8.7	1.3	0.5	-4.6	0.5	0.2
5	-0.1	0.2	0.1	0.5	0.1	0.0
RE	[unit·m]		(Length=0.73 m)			
2	0.2	1.3	0.5	-0.2	3.	1.1
3	1.8	1.1	0.5	0.1	0.5	0.2

Table 6: Expected BNL-built D4A errors at collision (ver. 1.0). $R_0 = 17$ mm

n	Normal			Skew		
	$\langle b_n \rangle$	$d(b_n)$	$\sigma(b_n)$	$\langle a_n \rangle$	$d(a_n)$	$\sigma(a_n)$
Body	[unit]					
2	0.07	0.54	0.19	0.41	2.4	1.1
3	-0.38	1.6	0.84	-0.03	0.27	0.10
4	-0.01	0.08	0.03	0.01	0.34	0.13
5	0.04	0.17	0.09	-0.01	0.04	0.01
7	-0.01	0.02	0.01	-0.0	0.01	0.0
9	0.0	0.01	0.0	-0.0	0.0	0.0
LE	[unit·m]		(Length=0.73 m)			
2	-0.3	1.5	0.7	-1.0	2.9	1.2
3	10.3	1.4	0.5	-4.6	0.5	0.2
5	-0.1	0.2	0.1	0.5	0.1	0.0
RE	[unit·m]		(Length=0.73 m)			
2	0.2	1.2	0.5	0.6	3.1	1.3
3	2.8	1.2	0.5	0.1	0.5	0.2

Table 7: Expected BNL-built D4A errors at injection (ver. 1.0). $R_0 = 17$ mm

n	Normal			Skew		
	$\langle b_n \rangle$	$d(b_n)$	$\sigma(b_n)$	$\langle a_n \rangle$	$d(a_n)$	$\sigma(a_n)$
Body	[unit]					
2	0.06	0.51	0.19	0.12	2.8	1.1
3	-5.7	2.5	0.92	-0.03	0.24	0.09
4	-0.02	0.07	0.03	0.04	0.37	0.13
5	0.14	0.18	0.09	-0.01	0.04	0.01
7	-0.04	0.02	0.01	0.0	0.01	0.0
9	0.01	0.01	0.0	0.0	0.0	0.0
LE	[unit·m]		(Length=0.73 m)			
2	-0.2	1.5	0.7	-1.6	2.9	1.1
3	8.7	1.3	0.5	-4.6	0.5	0.2
5	-0.1	0.2	0.1	0.5	0.1	0.0
RE	[unit·m]		(Length=0.73 m)			
2	0.2	1.3	0.5	-0.2	3.	1.1
3	1.8	1.1	0.5	0.1	0.5	0.2

The big value of b_3 at injection is caused by the effect of persistent current. In comparison with RHIC case this effect is relatively large. The magnet design was optimized initially for RHIC but the current of RHIC magnet at injection is about 600 A while the magnets for LHC would use the current as low as 300 A which leads to increasing persistent sextupole component. The analysis showed the persistent b_3 at the arc LHC dipoles is of the same value as shown in Table 8. The contribution of the the RF region dipoles (D3,D4) to the chromaticity variation is small in comparison with the total contribution from the large amount of arc dipole magnets and does not require special corrections. The same is true for D1,D2 dipoles too. Furthemore, no noticable impact was found from the saturation of b_3 component at collision.

Table 8: Persistent current contribution from D3,D4 dipoles versus arc dipoles

Quantity	Arc dipoles	D3,D4
Persistent b_3 [u]	-9	-6
Dispersion [m]	1.5	0.1
Chromaticity	500	0.03

Compensation measures have been taken to diminish the effect of the errors of interaction region dipole D1 on beam dynamics. They include:

1. Magnet Orientation Optimization: D1 lead end is oriented towards the interaction points where a b_3 corrector is located.

2. Body-End Compensation for the systematic b_3:

$$b_3(\text{Body}) = -0.095\, B_3(\text{LE}) - 0.116\, B_3(\text{RE}) = -1.3[\text{u}]$$

Tracking studies were performed for the proton LHC lattice both at injection and collision with the whole set of errors from dipole error tables. The studies indicated no noticeable impact of the dipole errors on the beam dynamics. If only BNL dipole errors are taken into the account the resulting dynamic aperture is beyond the physical aperture. Figure 3 shows no difference in tune footprint at the injection energy for the cases with and without the BNL dipole errors. The tune footprint produced by the dipole errors only is about 2×10^{-4}, well below the target value.

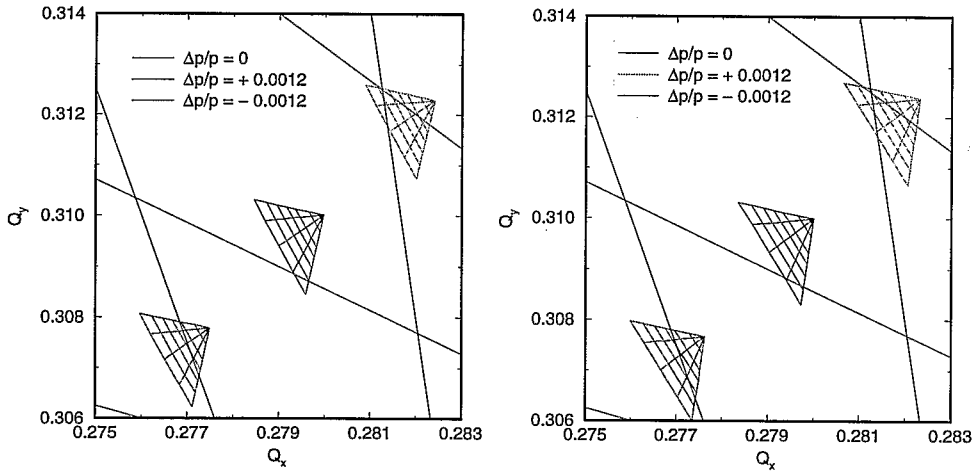

Figure 3: 11σ tune footprints with and without the errors in D1,D2,D3,D4 magnets.

4 Dipole error impact at heavy-ion operation

Heavy-ion collision lattice uses low-β^* IP2 in addition to low-β^* collisions at IP1 and IP5. This produces large values of β functions in corresponding IR triplet quadrupoles and D1 dipoles. Furthemore, all interaction regions utilize orbit separation and crossing angle schemes. Such schemes lead to large orbit excursion inside IR quads and dipoles thus shifting the beam to the field regions with larger nonlinearity. The interaction region configuration for ion lattice used at the tracking studies is shown in Table 9. The worst case is considered with the crossing angle of $\pm 150\mu$rad at each low-β interaction points.

Table 9: Interaction region configuration parameters

	IP1	IP2	IP5	IP8
sep. [mm]	0	0	0	1.5 h
angle[μrad]	$\pm$150 v	$\pm$150 v	$\pm$150 h	$\pm$100 v
β^*_x,β^*_y [m]	0.5,0.5	0.5,0.5	0.5,0.5	33,33

The tracking used the two possible schemes of IR quadrupole arrangement. In the *unmixed* scheme KEK-built magnets are installed at IR1, IR2 and FNAL-built magnets at IR5, IR8. In the *mixed* scheme the each interaction region contains both KEK-built (Q1,Q3) and FNAL-built (Q2A,Q2B) quadrupoles. The most tracking has been done for the mixed scheme. Table 10 presents a summary of the tracking results.

Table 10: Effects of MQX and dipole errors in terms of 10^3-turn 6D DA.

Case	DA (σ_{xy})	Min. DA
Unmixed case:		
Errors at IR2 only	9.7$\pm$2.4	$6\sigma_{xy}$
Quad error at IR2 only	11.8$\pm$3.7	$6\sigma_{xy}$
Mixed case:		
Full error	8.5$\pm$1.5	$5\sigma_{xy}$
Quad error only	8.9$\pm$1.6	$6\sigma_{xy}$
Errors at IR2 only	10.2$\pm$2.3	$6\sigma_{xy}$
Quad error at IR2 only	11.7$\pm$3.5	$6\sigma_{xy}$
IR dipole error only	> physic.apert.	

The beam dynamic characteristics are mainly determined by the errors in IR quadrupoles. However, the dipoles, especially cold D1 at IR2, enhance the impact by further reducing the DA by 1.5–2σ. IR nonlinear correctors will be used to compensate for the quad and dipole errors and improve dynamic aperture to the target value of 12σ [2], [3].

5 Conclusion

Field quality of BNL dipoles is adequate for nominal proton and heavy ion operations both for injection and collision lattices.

6 Aknowledgements

We thank J.-P. Koutchouk, O. Brüning and R. Ostojic for lattice assistance and discussions, and many others, including A. Jain, M. Harrison, S. Peggs, S. Plate, J. Strait, R. Talman and E. Willen.

References

[1] A. Jain, "Expected Harmonics (Version 1.0) in BNL-Built LHC Dipoles", RHIC/AP/147, 1998.
Also, the error tables are presented on the Web at *http://www.agsrhichome.bnl.gov/LHC/ref/*

[2] J. Wei et al., "Insertion region local correction for the Large Hadron Collider", PAC, New York, 1999.

[3] V. Ptitsin et al., "BNL-built LHC magnet error impact analysis and compensation", PAC, New York, 1999.