RHIC Accelerator Controls Section
Bldg. 1004B Wiring Diagrams
BNL Drawing Number 94028529

Brookhaven National Laboratory, Upton, New York 11973

Created By: Ed Koropsak
Edited By: Phil Pape
Last Updated 10/25/2002

Power Distribution
- 🕮 Rack R04B02 (Sheet 1)
- 🕮 Rack R04B03, Rack R04B04 (Sheet 2)
- 🕮 Rack R04B05, Rack R04B06 (Sheet 3)
- 🕮 Rack R04B07, Rack R04B19 (Sheet 4)

SPARES
- 🕮 MADC Channels (Sheet 98)
- 🕮 F/O Channels (Sheet 99)

Serial Links
- 🕮 AGS Event Link (Sheet 5)
- 🕮 RHIC Event Link (Sheet 6,7,8,9,10)
- 🕮 Real Time Data Link (RTDL) (Sheet 11,12,13,14)
- 🕮 Reset Link (Sheet 15,16,17,18)
- 🕮 Beam Sync Yellow Link (Sheet 19)
- 🕮 Beam Sync Blue Link (Sheet 20)

VME Chassis CFE-4B-RTDL modules
- 🕮 Front End Computer, V108 Utility Module (Sheet 88)
- 🕮 BIT 3 Bus Extenders (Sheet 88)
- 🕮 V105 RTDL Encoder Module (Sheet 11)
- 🕮 V107 Timestamp Module (Sheet 21)
- 🕮 V106 Input Modules (Sheet 22)
- 🕮 V191 RTDL Bus Extenders (Sheet 90)

VME Chassis CEX-4B-RTDL1 modules
- 🕮 BIT 3 Bus Extender (Sheet 88)
- 🕮 V106 Input Modules (Sheet 24, 25, 26, 27)
- 🕮 V191 RTDL Bus Extenders (Sheet 90)
- 🕮 VMIVME 5576 Reflective Memory (Sheet 93)

VME Chassis CEX-4B-RTDL2 modules
- 🕮 BIT 3 Bus Extender (Sheet 88)
- 🕮 V206 / V106 Input Modules (Sheet 28, 29, 29_1, 29_2, 30, 31)
- 🕮 V191 RTDL Bus Extenders (Sheet 90)

NOTE: Sheets 23, 32-51, 89 are Blank

VME Chassis CFE-4B-EVT modules
- 🕮 Front End Computer, V108 Utility Module (Sheet 86)
- 🕮 V100 EVENT LINK Encoder Module (Sheet 6)
- 🕮 V101 EVENT LINK Input Modules (Sheet 80, 81,82, 83)

VME Chassis CFE-4B-TIME modules
- 🕮 Front End Computer, V108 Utility Module (Sheet 87)
- 🕮 V102, V104,V194 AGS Decoders/Fanout (Sheet 95)
- 🕮 V102, V104,V194 RHIC Decoders/Fanout (Sheet 96, 97)
- 🕮 V120 Permit Modules (Sheet 84)
- 🕮 Permit System Interface Panels (Sheet 85)
- 🕮 Permit Pulse Module (Sheet 106)

VME Chassis CFE-4B-PS1 modules
- 🕮 Front End Computer, V108 Utility Module (Sheet 92)
- 🕮 V113/V114 MADC System (Sheet 52)
- 🕮 V115 WFG A: bo3-tq4, bo3-tq5 (Sheet 53)
- 🕮 V115 WFG B: bo3-tq6, bi4-tq4 (Sheet 54)
- 🕮 V115 WFG C: bi4-tq5, bi4-tq6 (Sheet 55)
- 🕮 V115 WFG D: b4-q89, bi4-qf9 (Sheet 56)
- 🕮 V115 WFG E: bo3-qf8, b4-dhx (Sheet 57)
- 🕮 V115 WFG F: b4-dh0 (Sheet 58)
- 🕮 V115 WFG G: bo3-qd1, bi4-qf1 (Sheet 59)
- 🕮 V115 WFG H: bo3-qf2, bo3-qd3 (Sheet 60)
- 🕮 V115 WFG I: bo3-qf6, bo3-qd7 (Sheet 61)
- 🕮 V115 WFG J: bi4-qd2, bi4-qf3 (Sheet 62)
- 🕮 V115 WFG K: bi4-qd6, bi4-qf7 (Sheet 63)
- 🕮 V115 WFG L: blue HV quad offset (Sheet 64)
- 🕮 V115 WFG M: blue main dipole, main quad (Sheet 65)
- 🕮 DX Heater PS MADC Readbacks (Sheet 100)

VME Chassis CFE-4B-PS2 modules
- 🕮 Front End Computer, V108 Utility Module (Sheet 94)
- 🕮 V113/V114 MADC System (Sheet 66)
- 🕮 V115 WFG A: yi3-tq4, yi3-tq5 (Sheet 67)
- 🕮 V115 WFG B: yi3-tq6, yo4-tq4 (Sheet 68)
- 🕮 V115 WFG C: yo4-tq5, yo4-tq6 (Sheet 69)
- 🕮 V115 WFG D: y4-q89, yo4-qf8 (Sheet 70)
- 🕮 V115 WFG E: yi3-qf9, y4-dh0 (Sheet 71)
- 🕮 V115 WFG F: unused (Sheet 72)
- 🕮 V115 WFG G: yi3-qf1, yo4-qd1 (Sheet 73)
- 🕮 V115 WFG H: yi3-qd2, yi3-qf3 (Sheet 74)
- 🕮 V115 WFG I: yi3-qd6, yi3-qf7 (Sheet 75)
- 🕮 V115 WFG J: yo4-qf2, yo4-qd3 (Sheet 76)
- 🕮 V115 WFG K: yo4-qf6, yo4-qd7 (Sheet 77)
- 🕮 V115 WFG L: yellow HV quad offset (Sheet 78)
- 🕮 V115 WFG M: yellow main dipole, main quad (Sheet 79)

VME Chassis CFE-4B-PS3 modules

📖 Front End Computer, V108 Utility Module (Sheet 91)
📖 V115 WFG A: RTDL Input (Sheet 102)
rt-yrad-steer, rt-yfreq-steer
📖 V115 WFG B: RTDL Input (Sheet 102)
rt-brad-steer, rt-bfreq-steer
📖 V115 WFG C: RTDL Input (Sheet 103)
rt-yphase, rt-bphase
📖 V115 WFG D: RTDL Input (Sheet 103)
rt-yrigidity, rt-brigidity
📖 V115 WFG E: RTDL Input (Sheet 104)
rt-brampvar, rt-yrampvar

📖 V115 WFG F: RTDL Input (Sheet 104)
rt-spare7, rt-spare8
📖 V115 WFG G: RTDL Input (Sheet 105)
rt-spare9, rt-spare10
📖 V115 WFG H: RTDL Input (Sheet 105)
rt-spare11, rt-spare12
📖 V115 WFG I: RTDL Input (Sheet 107)
rt-bbdot, rt-ybdot
📖 V115 WFG J: RTDL Input (Sheet 107)
rt-knob1, rt-knob2
📖 V115 WFG K: RTDL Input (Sheet 108)
rt-knob3, rt-knob4
📖 V115 WFG L: RTDL Input (Sheet 108)
rt-knob5, rt-knob6
📖 V115 WFG M: RTDL Input (Sheet 109)
rt-yradiusjump, rt-bradiusjump

VME Chassis CFE-4B-PS4 modules

📖 Front End Computer, V108 Utility Module (Sheet 110)
📖 (Sheet 100)
📖 Allen Bradley PLC (Sheet 111)

REV.	ZONE	ECN NO.	DATE	BY	CKR	APP.

ACS, BNL 10/16/98 1:16 PM 8529_01.dwg

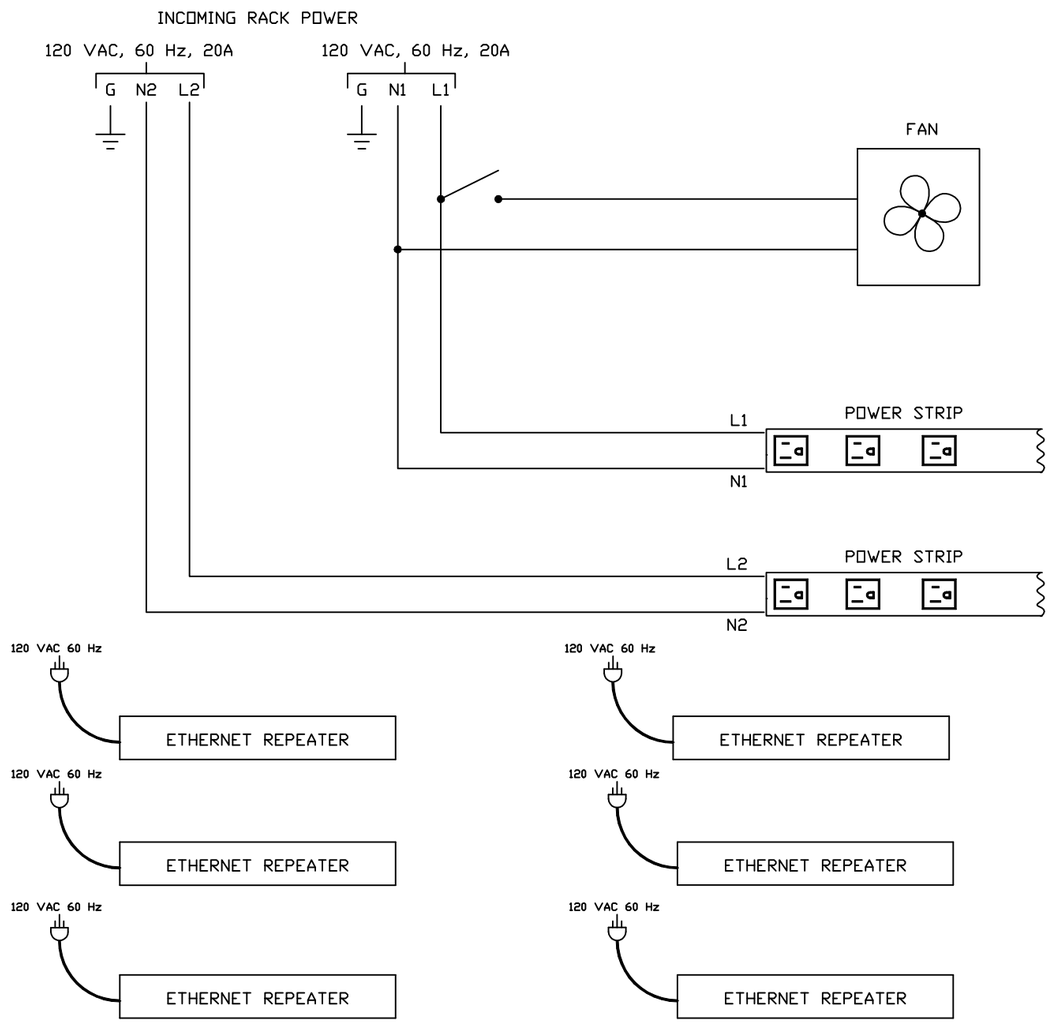

NOTE: ALL 120 VAC, 60 Hz POWER CORDS
PLUG INTO POWER STRIP OUTLETS

RACK R04B02

-3	-2	-1	REF DESIGNATOR	ITEM NO.	DESCRIPTION	MAT'L. DWG NO.,BNL NO.
		X		11	CABLE ASSY, POWER SUPPLY TO MADC A/D I/O PANEL (3 CABLES/PS)	
		X		10	CABLE ASSY, LOW RES PS IF MODULE TO POWER SUPPLY	
		X		9	PERMIT SYSTEM INTERFACE CABLE, T120 TO PERMIT SYSTEM INTERFACE PANEL	D09-E2225-2
		X		8	SERIAL LINK TWINAX CABLE, LENGTH AS REQUIRED	94028176
		X		7	SERIAL LINK TWINAX CABLE, 1 FT	94028176
		X		6	DUPLEX MULTIMODE FIBER OPTIC CABLE, T115 TO LOW RES PS INTERFACE MODULE	94028249
		X		5	SINGLE MODE FIBER OPTIC CABLE	94028251
		X		4	MADC A/D I/O CABLE	94028216
		X		3	TRANSITION MODULE P2 RIBBON CABLE, V115, V120	94028159
		X		2	MADC V113 TO V114 P2 INTERFACE RIBBON CABLE	94028218
		X		1	NETWORK CABLE TO FRONT END COMPUTER	

QTY REQD

INTERPRET IN GENERAL ACCORDANCE WITH ASME Y14.24M-1989

UNLESS OTHERWISE SPECIFIED DIMENSIONS ARE IN INCHES

DECIMAL TOLERANCES
.X ±.030
.XX ±.015
.XXX ±.005
ANGULAR TOLERANCE
± .5°

OUTSTANDING ECN

NA FINISH

BREAK SHARP EDGES
MAX. XX MIN. XX

Q.A. CATEGORY A-3		DATE	BROOKHAVEN NATIONAL LABORATORY
DRAWN BY	Phil Pape	11/12/97	UPTON, N.Y. 11973
CHECKED BY			RHIC CONTROLS WIRING DIAGRAM
DESIGN APPROVAL			SERVICE BLDG. RACK R04B02
ENGINEER APPROVAL	R. MICHNOFF	11/21/97	POWER DISTRIBUTION
SUPVR. APPROVAL			

NEXT ASSEMBLY

SIZE D | 94028529 DRAWING NUMBER | REV. A

MATERIAL: ——— SCALE: NA WEIGHT: – SHEET 1 / 101

1 *AUTOCAD

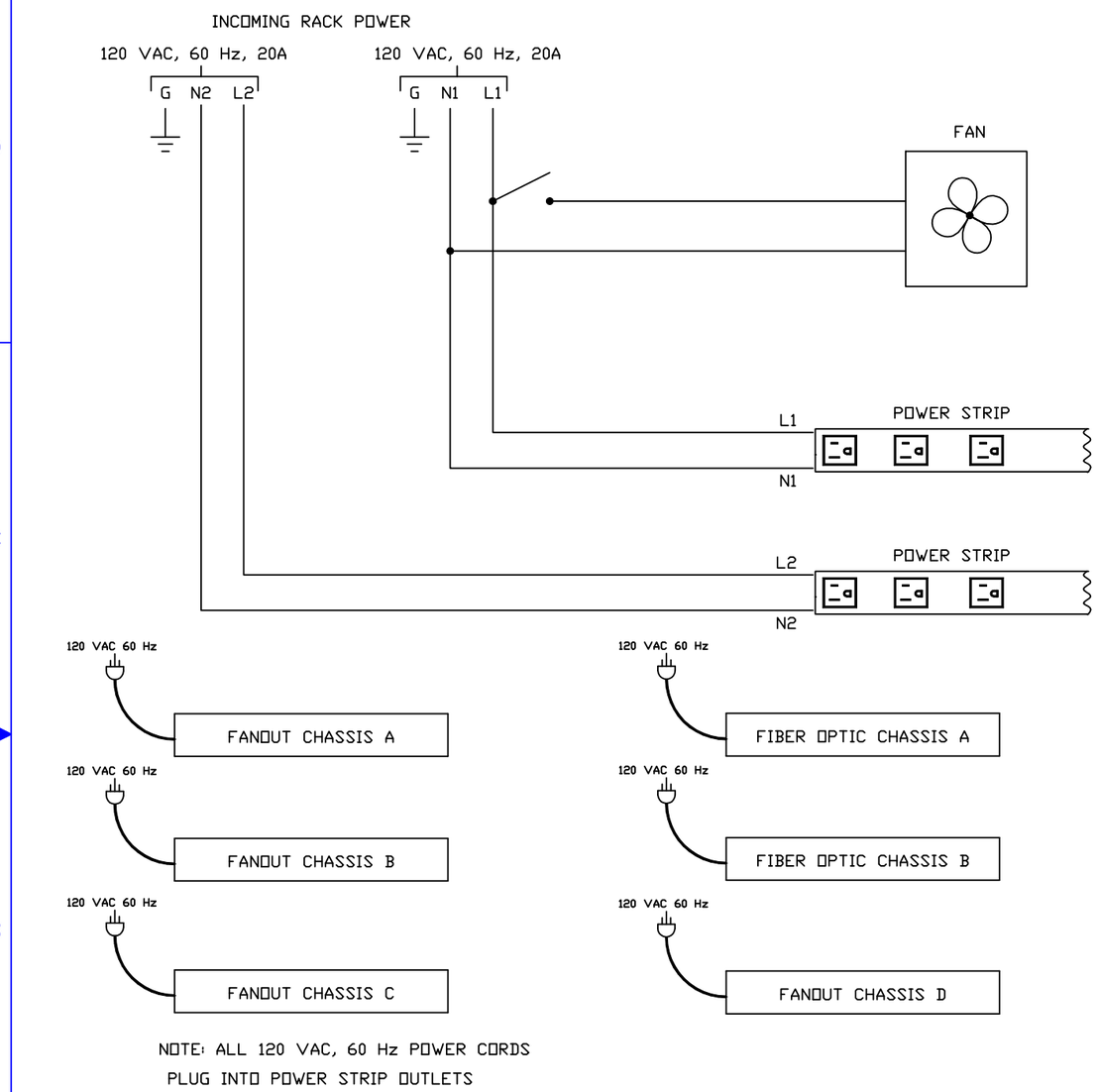

RACK R4B03

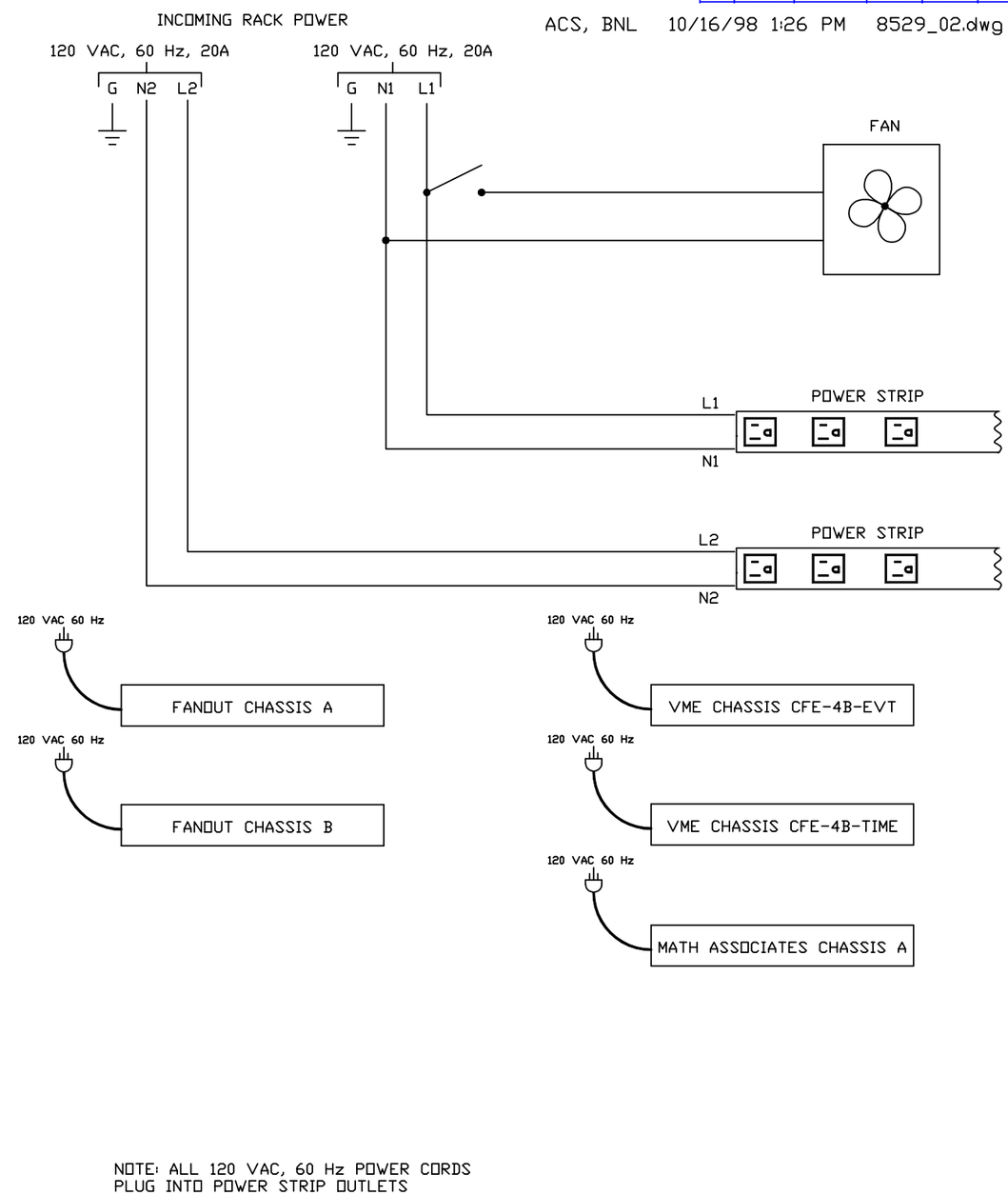

RACK R4B04

REV.	ZONE	ECN NO.	DATE	BY	CKR	APP.

ACS, BNL 10/16/98 1:26 PM 8529_02.dwg

-3	-2	-1	REF DESIGNATOR	ITEM NO.	DESCRIPTION	MAT'L. DWG NO./JAN. NO.
QTY REQD						

INTERPRET IN GENERAL ACCORDANCE WITH ASME Y14.24M-1989

UNLESS OTHERWISE SPECIFIED DIMENSIONS ARE IN INCHES

DECIMAL TOLERANCES
.X ±.030
.XX ±.015
.XXX ±.005
ANGULAR TOLERANCE
± .5°

OUTSTANDING ECN

NA FINISH

BREAK SHARP EDGES
MAX. XX MIN. XX

Q.A. CATEGORY A-3		DATE
DRAWN BY	Phil Pape	11/21/97
CHECKED BY		
DESIGN APPROVAL		
ENGINEER APPROVAL	R. MICHNOFF	11/21/97
SUPVR. APPROVAL		

NEXT ASSEMBLY

BROOKHAVEN NATIONAL LABORATORY
UPTON, N.Y. 11973

RHIC CONTROLS WIRING DIAGRAM
SERVICE BLDG. 1004B RACK R4B03, R4B04
POWER DISTRIBUTION

SIZE D | DRAWING NUMBER 94028529 | REV. A

MATERIAL: ——— SCALE: NA WEIGHT: – SHEET 2 / 101

*AUTOCAD

REV.	ZONE	ECN NO.	DATE	BY	CKR	APP.

BNL, BNL 5/5/00 11:24 AM 8529_03.dwg

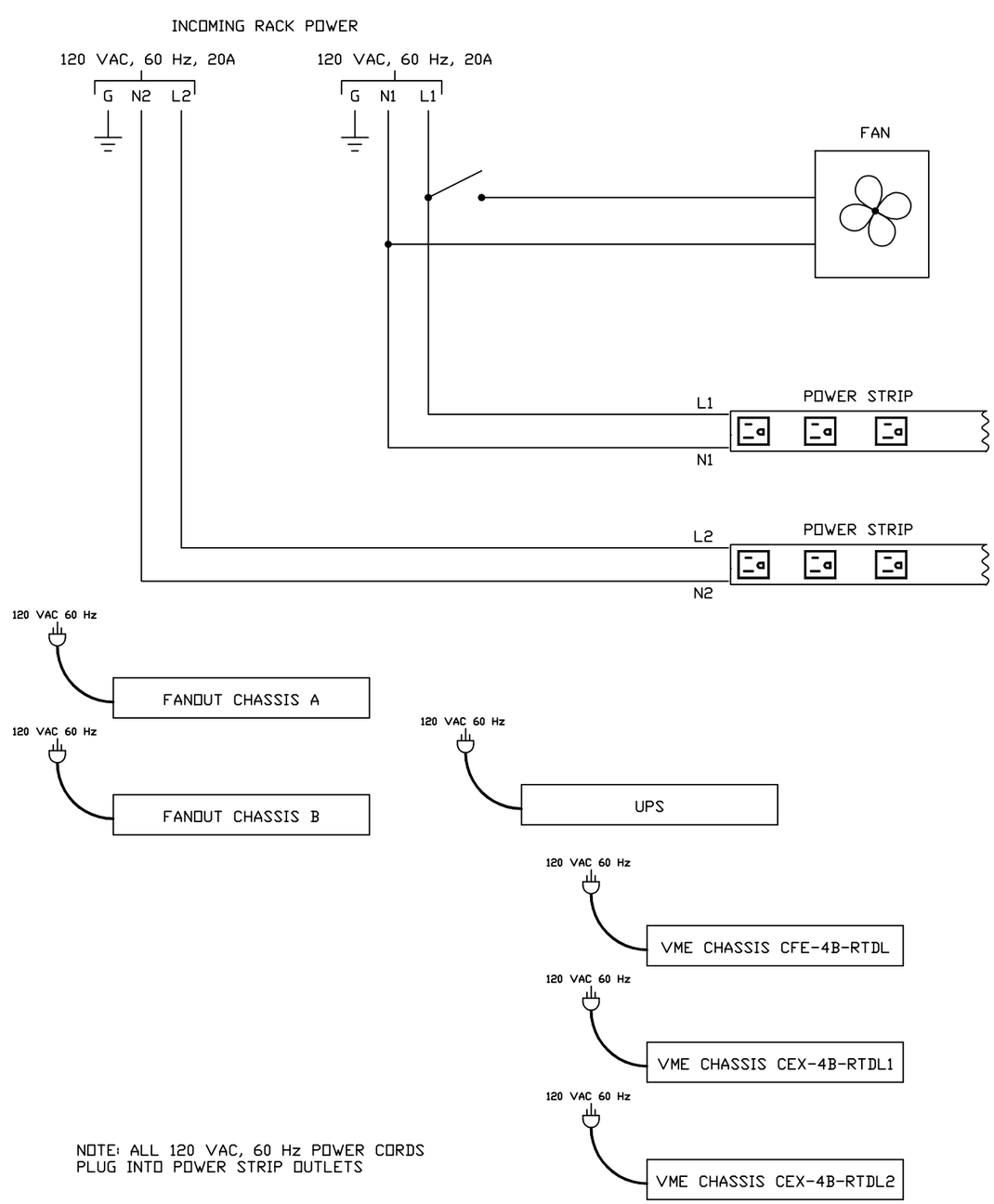

NOTE: ALL 120 VAC, 60 Hz POWER CORDS
PLUG INTO POWER STRIP OUTLETS

RACK R4B05

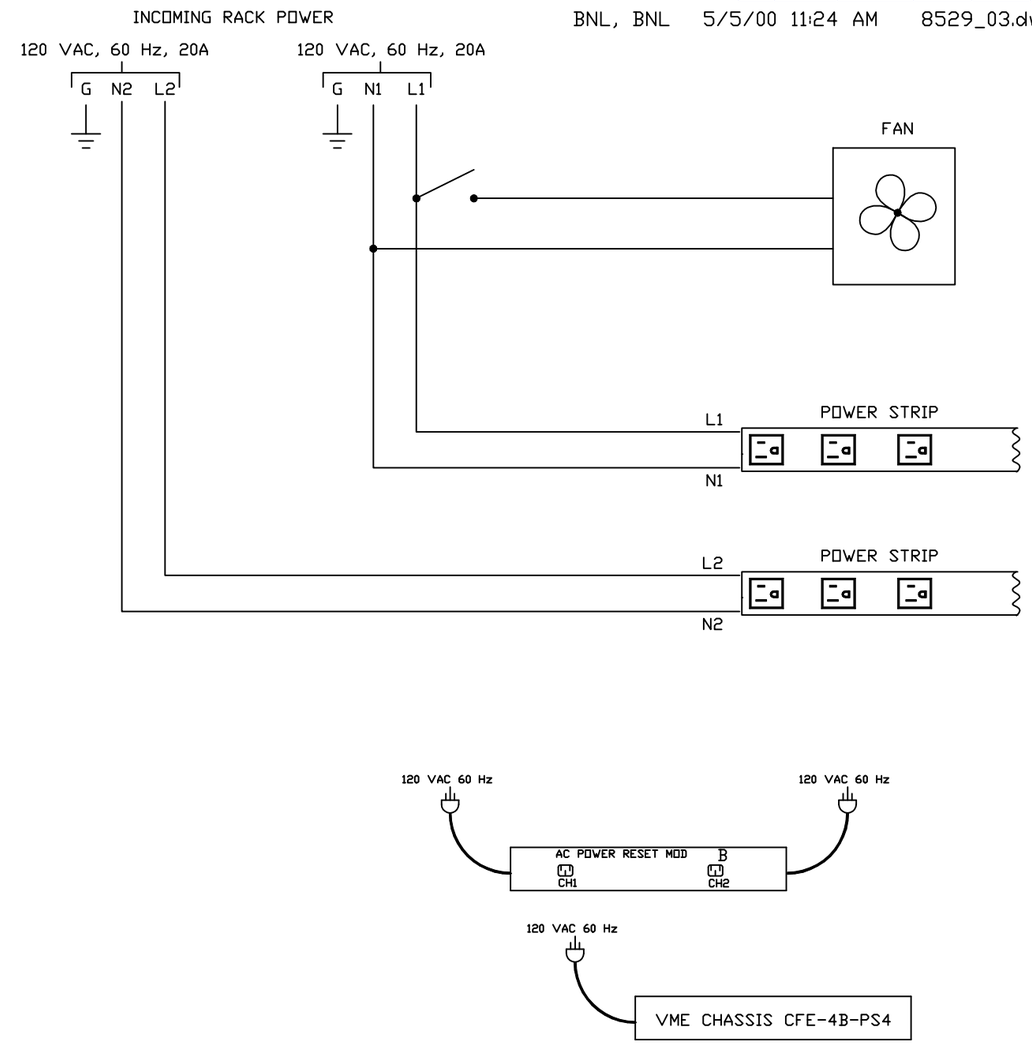

NOTE: ALL 120 VAC, 60 Hz POWER CORDS
PLUG INTO POWER STRIP OUTLETS

RACK R4B06

-3	-2	-1	REF DESIGNATOR	ITEM NO.	DESCRIPTION	MAT'L. DWG NO./BNL NO.
QTY REQD						

INTERPRET IN GENERAL ACCORDANCE WITH ASME Y14.24M-1989

UNLESS OTHERWISE SPECIFIED DIMENSIONS ARE IN INCHES

DECIMAL TOLERANCES
.X ±.030
.XX ±.015
.XXX ±.005
ANGULAR TOLERANCE
± .5°

OUTSTANDING ECN

NA FINISH

BREAK SHARP EDGES
MAX. XX MIN. XX

Q.A. CATEGORY A-3		DATE
DRAWN BY	Phil Pape	11/21/97
CHECKED BY		
DESIGN APPROVAL		
ENGINEER APPROVAL	R. MICHNOFF	11/21/97
SUPVR. APPROVAL		

NEXT ASSEMBLY

BROOKHAVEN NATIONAL LABORATORY
UPTON, N.Y. 11973

RHIC CONTROLS WIRING DIAGRAM
SERVICE BLDG. 1004B RACK R4B05, R4B06
POWER DISTRIBUTION

SIZE D | DRAWING NUMBER 94028529 | REV. A

MATERIAL: ——— SCALE: NA WEIGHT: – SHEET 3 / 101

*AUTOCAD

REV.	ZONE	ECN NO.	DATE	BY	CKR	APP.

BNL, BNL 5/5/00 11:32 AM 8529_04.dwg

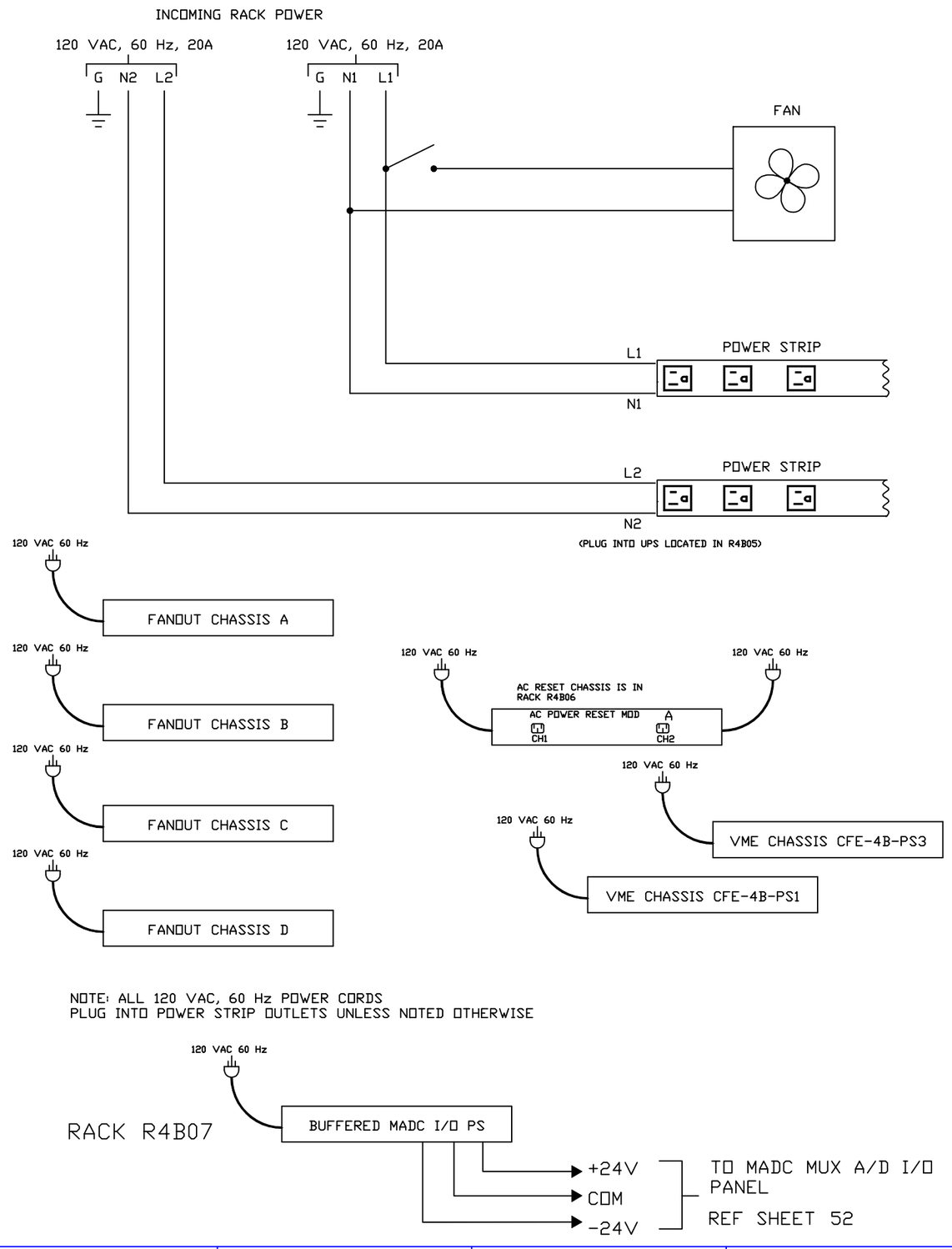

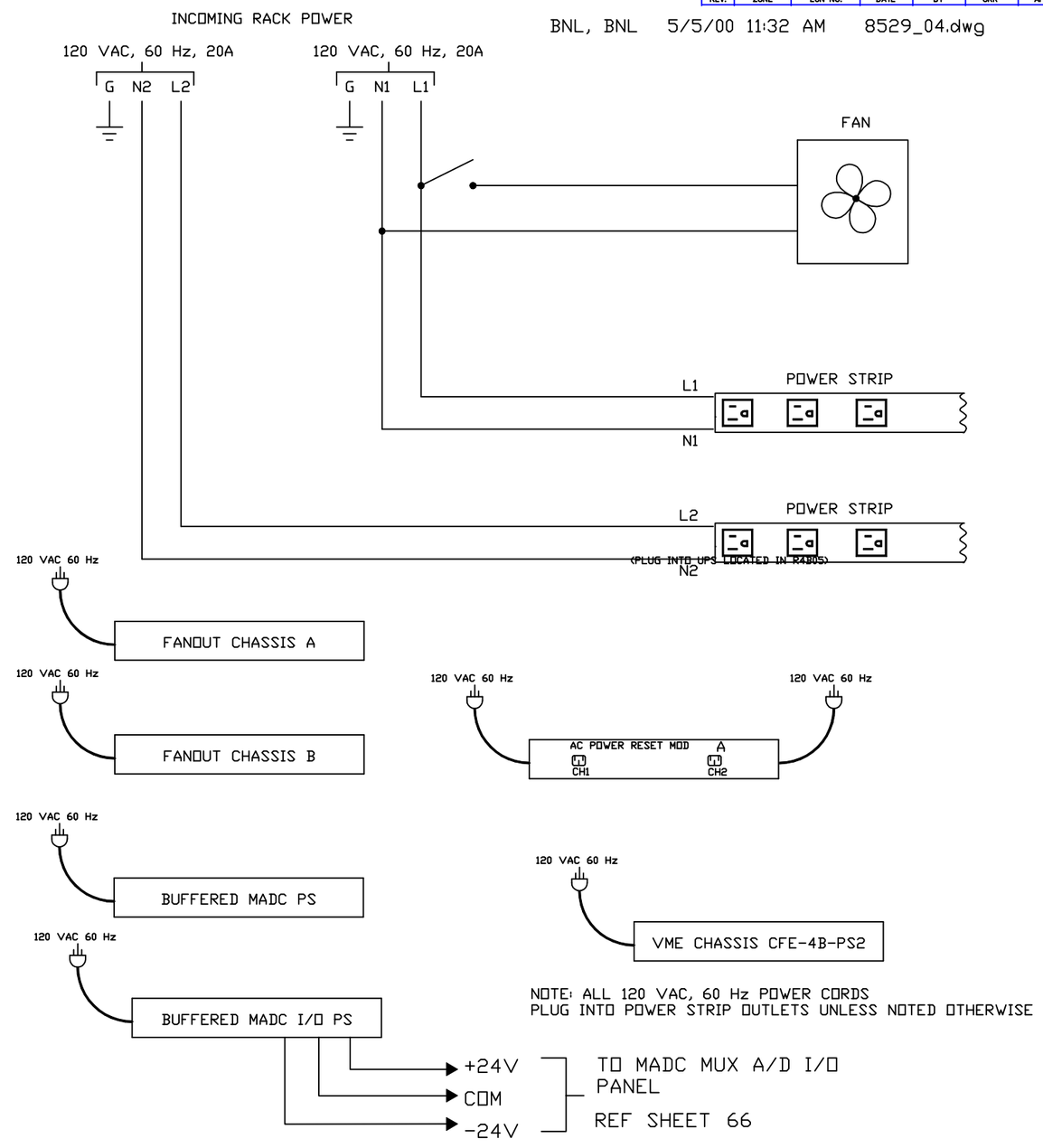

-3	-2	-1	REF DESIGNATOR	ITEM NO.	DESCRIPTION	MAT'L. DWG NO.,BNL NO.
QTY REQD						

INTERPRET IN GENERAL ACCORDANCE WITH ASME Y14.24M-1989

UNLESS OTHERWISE SPECIFIED DIMENSIONS ARE IN INCHES

DECIMAL TOLERANCES .X ±.030 .XX ±.015 .XXX ±.005 ANGULAR TOLERANCE ± .5°

OUTSTANDING ECN: NA

FINISH: NA

BREAK SHARP EDGES MAX. XX MIN. XX

Q.A. CATEGORY A-3		DATE
DRAWN BY	Phil Pape	11/21/97
CHECKED BY		
DESIGN APPROVAL		
ENGINEER APPROVAL	R. MICHNOFF	11/21/97
SUPVR. APPROVAL		
NEXT ASSEMBLY		

BROOKHAVEN NATIONAL LABORATORY
UPTON, N.Y. 11973

RHIC CONTROLS WIRING DIAGRAM

SERVICE BLDG. 1004B RACK R4B07, R40B19

POWER DISTRIBUTION

SIZE D — DRAWING NUMBER 94028529 — REV. A

MATERIAL: ——— SCALE: NA WEIGHT: – SHEET 4 / 101

*AUTOCAD

ACS, BNL 10/16/98 1:30 PM 8529_05.dwg

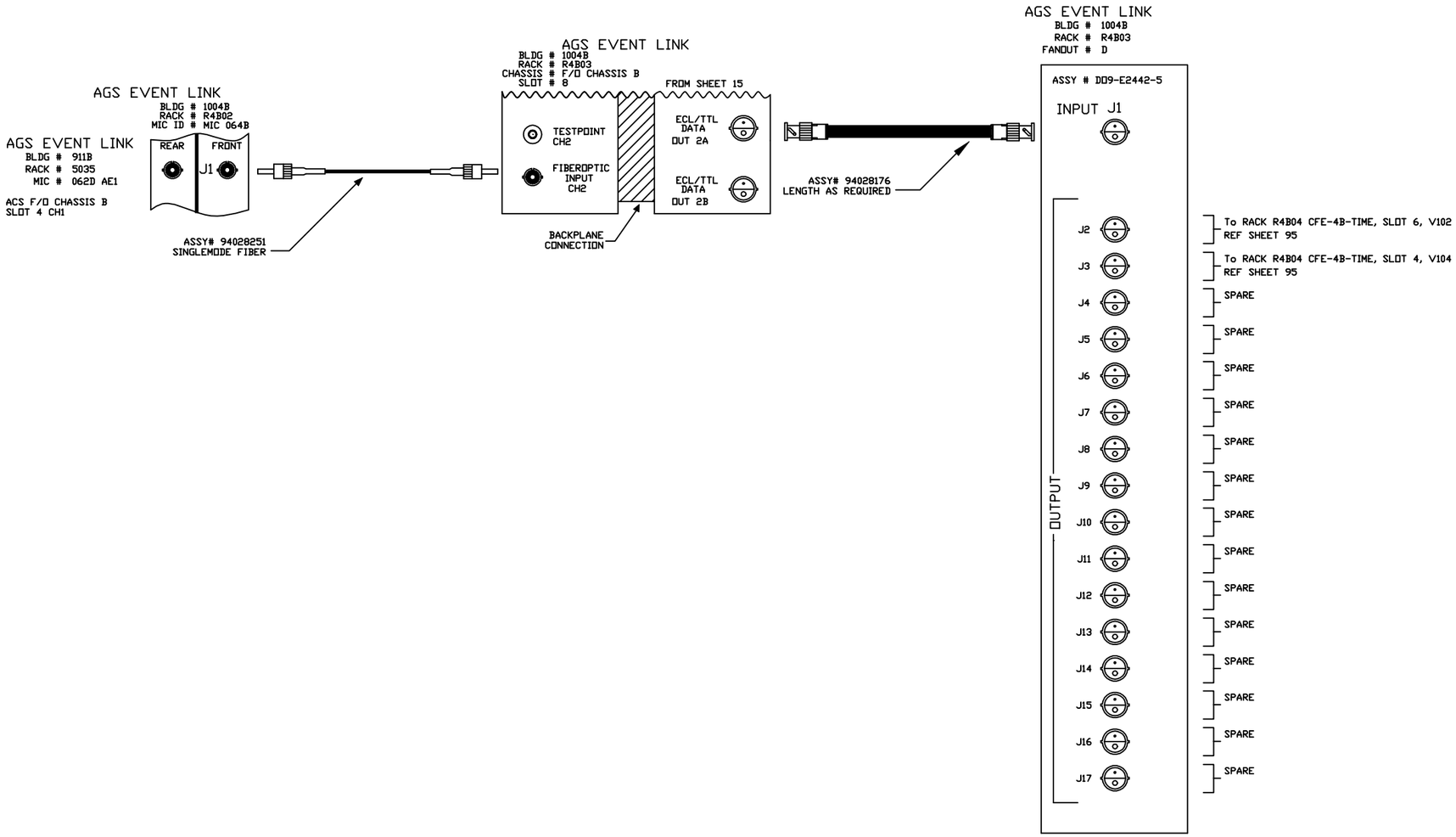

-3	-2	-1	REF DESIGNATOR	ITEM NO.	DESCRIPTION	MAT'L. DWG NO./INL NO.
QTY REQD						

INTERPRET IN GENERAL ACCORDANCE WITH ASME Y14.24M-1989

UNLESS OTHERWISE SPECIFIED DIMENSIONS ARE IN INCHES

DECIMAL TOLERANCES
.X ±.030
.XX ±.015
.XXX ±.005
ANGULAR TOLERANCE
± .5°

NA FINISH

BREAK SHARP EDGES
MAX. XX MIN. XX

OUTSTANDING ECN

Q.A. CATEGORY A-3		DATE
DRAWN BY	Phil Pape	11/21/97
CHECKED BY		
DESIGN APPROVAL		
ENGINEER APPROVAL	R. MICHNOFF	11/21/97
SUPVR. APPROVAL		

NEXT ASSEMBLY

BROOKHAVEN NATIONAL LABORATORY
UPTON, N.Y. 11973

RHIC CONTROLS WIRING DIAGRAM

SERVICE BLDG 1004B

AGS EVENT LINK

SIZE D | DRAWING NUMBER 94028529 | REV. A

MATERIAL: ——— SCALE: NA WEIGHT: – SHEET 5 / 101

*AUTOCAD

ACS, BNL 1/28/00 1:44 PM 8529_06.dwg

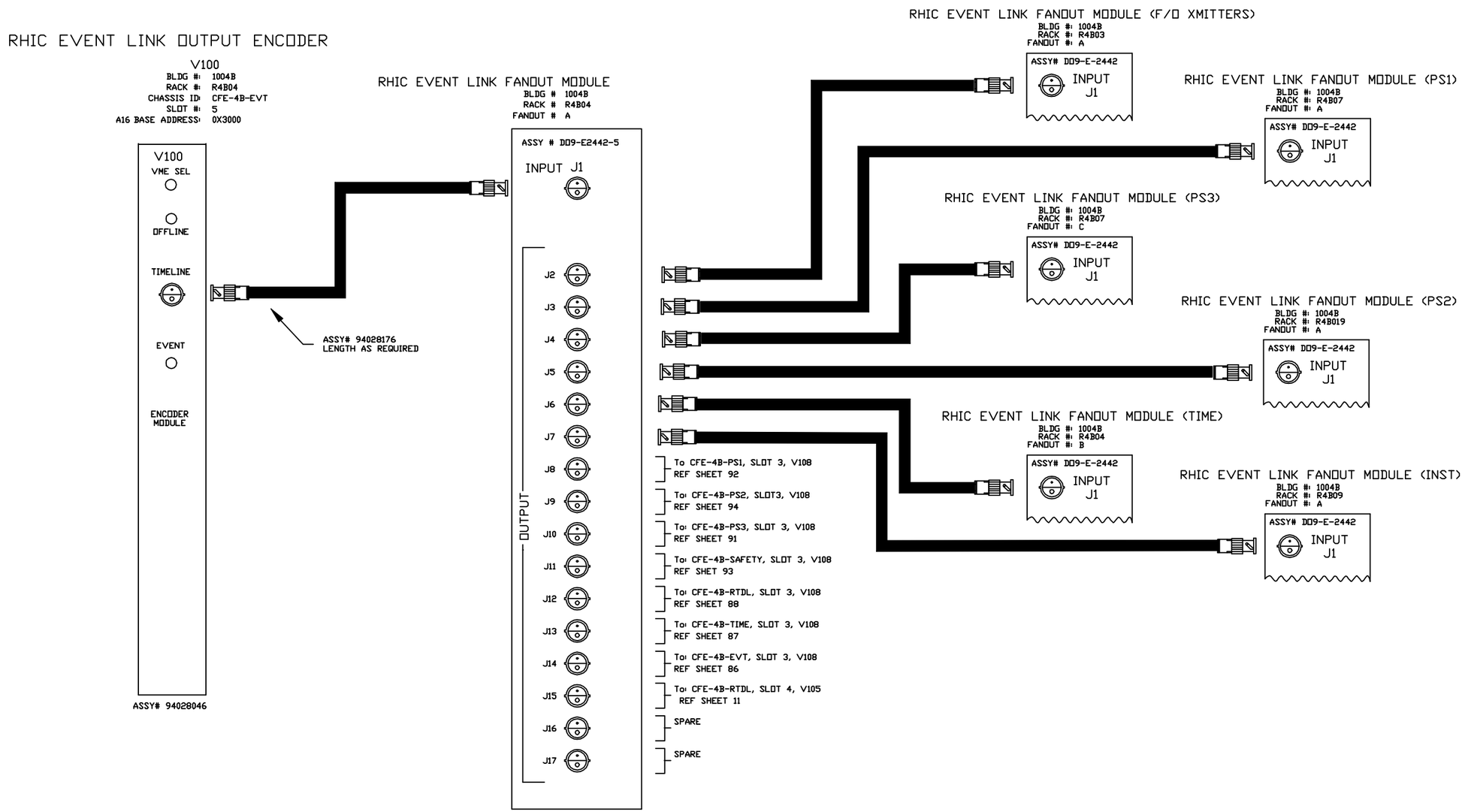

-3	-2	-1	REF DESIGNATOR	ITEM NO.	DESCRIPTION	MAT'L DWG NO./BNL NO.
QTY REQD						

INTERPRET IN GENERAL ACCORDANCE WITH ASME Y14.24M-1989

UNLESS OTHERWISE SPECIFIED DIMENSIONS ARE IN INCHES

DECIMAL TOLERANCES
.X ±.030
.XX ±.015
.XXX ±.005
ANGULAR TOLERANCE
± .5°

NA FINISH — BREAK SHARP EDGES — MAX. XX MIN. XX

OUTSTANDING ECN

Q.A. CATEGORY A-3		DATE
DRAWN BY	Phil Pape	11/21/97
CHECKED BY		
DESIGN APPROVAL		
ENGINEER APPROVAL	R. MICHNOFF	11/21/97
SUPVR. APPROVAL		

NEXT ASSEMBLY

BROOKHAVEN NATIONAL LABORATORY
UPTON, N.Y. 11973

RHIC CONTROLS WIRING DIAGRAM
SERVICE BLDG 1004B
RHIC EVENT LINK

SIZE D — DRAWING NUMBER 94028529 — REV. A

MATERIAL: ——— SCALE: NA WEIGHT: – SHEET 6 / 101

*AUTOCAD

REV.	ZONE	ECN NO.	DATE	BY	CKR	APP.

ACS, BNL 12/23/98 11:08 AM 8529_07.dwg

RHIC EVENT LINK FANOUT MODULE

BLDG # 1004B
RACK # R4B03
FANOUT # A

FROM SHEET 06
ASSY # DD9-E2442-5

OUTPUT

J2	TO F/O CHASSIS B, SLOT 9, CH1 FEED TO 911 RK 5035
J3	TO CFE-4B-Q1, V108 RACK BY VALVE BOX
J4	TO CFE-4B-Q2, V108 RACK BY VALVE BOX
J5	TO CFE-4B-Q1, V102 RACK BY VALVE BOX
J6	TO CFE-4B-Q2, V102 RACK BY VALVE BOX
J7	SPARE
J8	SPARE
J9	SPARE
J10	SPARE
J11	SPARE
J12	To F/O CHASSIS A, SLOT 3, CHAN 2 1012B
J13	To F/O CHASSIS A, SLOT 3, CHAN 1 1010B
J14	To F/O CHASSIS A, SLOT 2, CHAN 2 1008B
J15	To F/O CHASSIS A, SLOT 2, CHAN 1 1006B
J16	To F/O CHASSIS A, SLOT 1, CHAN 2 1004B
J17	To F/O CHASSIS A, SLOT 1, CHAN 1 1002B

RHIC EVENT LINK FANOUT MODULE

BLDG # 1004B
RACK # R4B07
FANOUT # A

FROM SHEET 06
ASSY # DD9-E2442-5

OUTPUT

J2	SPARE
J3	To CFE-4B-PS1, SLOT 20, T215 REF SHEET 65
J4	To CFE-4B-PS1, SLOT 19, T215 REF SHEET 64
J5	To CFE-4B-PS1, SLOT 18, T215 REF SHEET 63
J6	To CFE-4B-PS1, SLOT 17, T215 REF SHEET 62
J7	To CFE-4B-PS1, SLOT 16, T215 REF SHEET 61
J8	To CFE-4B-PS1, SLOT 15, T215 REF SHEET 60
J9	To CFE-4B-PS1, SLOT 14, T215 REF SHEET 59
J10	To CFE-4B-PS1, SLOT 13, T215 REF SHEET 58
J11	To CFE-4B-PS1, SLOT 12, T215 REF SHEET 57
J12	To CFE-4B-PS1, SLOT 11, T215 REF SHEET 56
J13	To CFE-4B-PS1, SLOT 10, T215 REF SHEET 55
J14	To CFE-4B-PS1, SLOT 9, T215 REF SHEET 54
J15	To CFE-4B-PS1, SLOT 8, T215 REF SHEET 53
J16	To CFE-4B-PS1, SLOT 6, V113 REF SHEET 52
J17	To CFE-4B-PS1, SLOT 4, V113 REF SHEET 52

RHIC EVENT LINK FANOUT MODULE

BLDG # 1004B
RACK # R4B019
FANOUT # A

FROM SHEET 06
ASSY # DD9-E2442-5

OUTPUT

J2	SPARE
J3	To CFE-4B-PS2, SLOT 20, T215 REF SHEET 79
J4	To CFE-4B-PS2, SLOT 19, T215 REF SHEET 78
J5	To CFE-4B-PS2, SLOT 18, T215 REF SHEET 77
J6	To CFE-4B-PS2, SLOT 17, T215 REF SHEET 76
J7	To CFE-4B-PS2, SLOT 16, T215 REF SHEET 75
J8	To CFE-4B-PS2, SLOT 15, T215 REF SHEET 74
J9	To CFE-4B-PS2, SLOT 14, T215 REF SHEET 73
J10	To CFE-4B-PS2, SLOT 13, T215 REF SHEET 72
J11	To CFE-4B-PS2, SLOT 12, T215 REF SHEET 71
J12	To CFE-4B-PS2, SLOT 11, T215 REF SHEET 70
J13	To CFE-4B-PS2, SLOT 10, T215 REF SHEET 69
J14	To CFE-4B-PS2, SLOT 9, T215 REF SHEET 68
J15	To CFE-4B-PS2, SLOT 8, T215 REF SHEET 67
J16	To CFE-4B-PS2, SLOT 6, V113 REF SHEET 66
J17	To CFE-4B-PS2, SLOT 4, V113 REF SHEET 66

-3	-2	-1	REF DESIGNATOR	ITEM NO.	DESCRIPTION	MAT'L. DWG NO.,BNL NO.
QTY REQD						

INTERPRET IN GENERAL ACCORDANCE WITH ASME Y14.24M-1989

UNLESS OTHERWISE SPECIFIED DIMENSIONS ARE IN INCHES

DECIMAL TOLERANCES
.X ±.030
.XX ±.015
.XXX ±.005
ANGULAR TOLERANCE ± .5°

OUTSTANDING ECN

NA FINISH

BREAK SHARP EDGES MAX. XX MIN. XX

Q.A. CATEGORY A-3		DATE
DRAWN BY	Phil Pape	11/21/97
CHECKED BY		
DESIGN APPROVAL		
ENGINEER APPROVAL	R. MICHNOFF	11/21/97
SUPVR. APPROVAL		

NEXT ASSEMBLY

BROOKHAVEN NATIONAL LABORATORY
UPTON, N.Y. 11973

RHIC CONTROLS WIRING DIAGRAM
SERVICE BLDG 1004B
RHIC EVENT LINK

SIZE D | DRAWING NUMBER 94028529 | REV. A

MATERIAL: ——— SCALE: NA WEIGHT: – SHEET 7 / 101

*AUTOCAD

REV.	ZONE	ECN NO.	DATE	BY	CKR	APP.

BNL 10/19/01 2:48 PM 8529_08.dwg

RHIC EVENT LINK FANOUT MODULE

BLDG # 1004B
RACK # R4B07
FANOUT # C

FROM SHEET 06
ASSY # DD9-E2442-5

OUTPUT

J2	SPARE
J3	SPARE
J4	TO CFE-4B-PS3, SLOT 17, T215 REF SHEET 109
J5	TO CFE-4B-PS3, SLOT 16, T215 REF SHEET 109
J6	TO CFE-4B-PS3, SLOT 15, T215 REF SHEET 108
J7	TO CFE-4B-PS3, SLOT 14, T215 REF SHEET 108
J8	TO CFE-4B-PS3, SLOT 13, T215 REF SHEET 107
J9	TO CFE-4B-PS3, SLOT 12, T215 REF SHEET 107
J10	TO CFE-4B-PS3, SLOT 11, T215 REF SHEET 105
J11	TO CFE-4B-PS3, SLOT 10, T215 REF SHEET 105
J12	TO CFE-4B-PS3, SLOT 9, T215 REF SHEET 104
J13	TO CFE-4B-PS3, SLOT 8, T215 REF SHEET 104
J14	TO CFE-4B-PS3, SLOT 7, T215 REF SHEET 103
J15	TO CFE-4B-PS3, SLOT 6, T215 REF SHEET 103
J16	TO CFE-4B-PS3, SLOT 5, T215 REF SHEET 102
J17	TO CFE-4B-PS3, SLOT 4, T215 REF SHEET 102

RHIC EVENT LINK FANOUT MODULE

BLDG # 1004B
RACK # R4B04
FANOUT # B

FROM SHEET 06
ASSY # DD9-E2442-5

OUTPUT

J2	TO CFE-4B-TIME, SLOT 21, V120 REF SHEET 84
J3	TO CFE-4B-TIME, SLOT 19, V120 REF SHEET 84
J4	TO CFE-4B-TIME, SLOT 15, V104 REF SHEET 96
J5	TO CFE-4B-TIME, SLOT 13, V102 REF SHEET 96
J6	TO CFE-4B-TIME, SLOT 12, V102 REF SHEET 96
J7	TO CFE-4B-TIME, SLOT 15, V102 REF SHEET 97
J8	
J9	
J10	
J11	
J12	
J13	
J14	
J15	
J16	
J17	

RHIC EVENT LINK FANOUT MODULE

BLDG # 1004B
RACK # R4B09
FANOUT # A

FROM SHEET 06
ASSY # DD9-E2442-5

OUTPUT

J2	CFE-4B-BLM1, SLOT 3, V108
J3	CFE-4B-BLM1, SLOT 6, V113
J4	CFE-4B-BLM2, SLOT 3, V108
J5	CFE-4B-BLM2, SLOT 6, V113
J6	CFE-4B-BLM1, SLOT 13, V118
J7	CFE-4B-BLM2, SLOT 13, V118
J8	CFE-4B-BPM1, SLOT 3, V108
J9	TO CFE-4B-PS4, SLOT 3, V108 REF SHEET 110
J10	TO QUENCH DETECT CHASSIS RACK R4B24
J11	TO QUENCH DETECT CHASSIS RACK R4B24
J12	
J13	
J14	
J15	
J16	
J17	

-3	-2	-1	REF DESIGNATOR	ITEM NO.	DESCRIPTION	MAT'L DWG NO.,BNL NO.
QTY REQD						

INTERPRET IN GENERAL ACCORDANCE WITH ASME Y14.24M-1989

UNLESS OTHERWISE SPECIFIED DIMENSIONS ARE IN INCHES

DECIMAL TOLERANCES
.X ±.030
.XX ±.015
.XXX ±.005
ANGULAR TOLERANCE
± .5°

NA FINISH

BREAK SHARP EDGES
MAX. XX MIN. XX

OUTSTANDING ECN

Q.A. CATEGORY	A-3	DATE
DRAWN BY	Phil Pape	11/21/97
CHECKED BY		
DESIGN APPROVAL		
ENGINEER APPROVAL	R. MICHNOFF	11/21/97
SUPVR. APPROVAL		

NEXT ASSEMBLY

BROOKHAVEN NATIONAL LABORATORY
UPTON, N.Y. 11973

RHIC CONTROLS WIRING DIAGRAM
SERVICE BLDG 1004B
RHIC EVENT LINK

SIZE D
94028529
DRAWING NUMBER
REV. A

MATERIAL: ——— SCALE: NA WEIGHT: – SHEET 8 / 109

*AUTOCAD

ACS, BNL 10/16/98 1:39 PM 8529_09.dwg

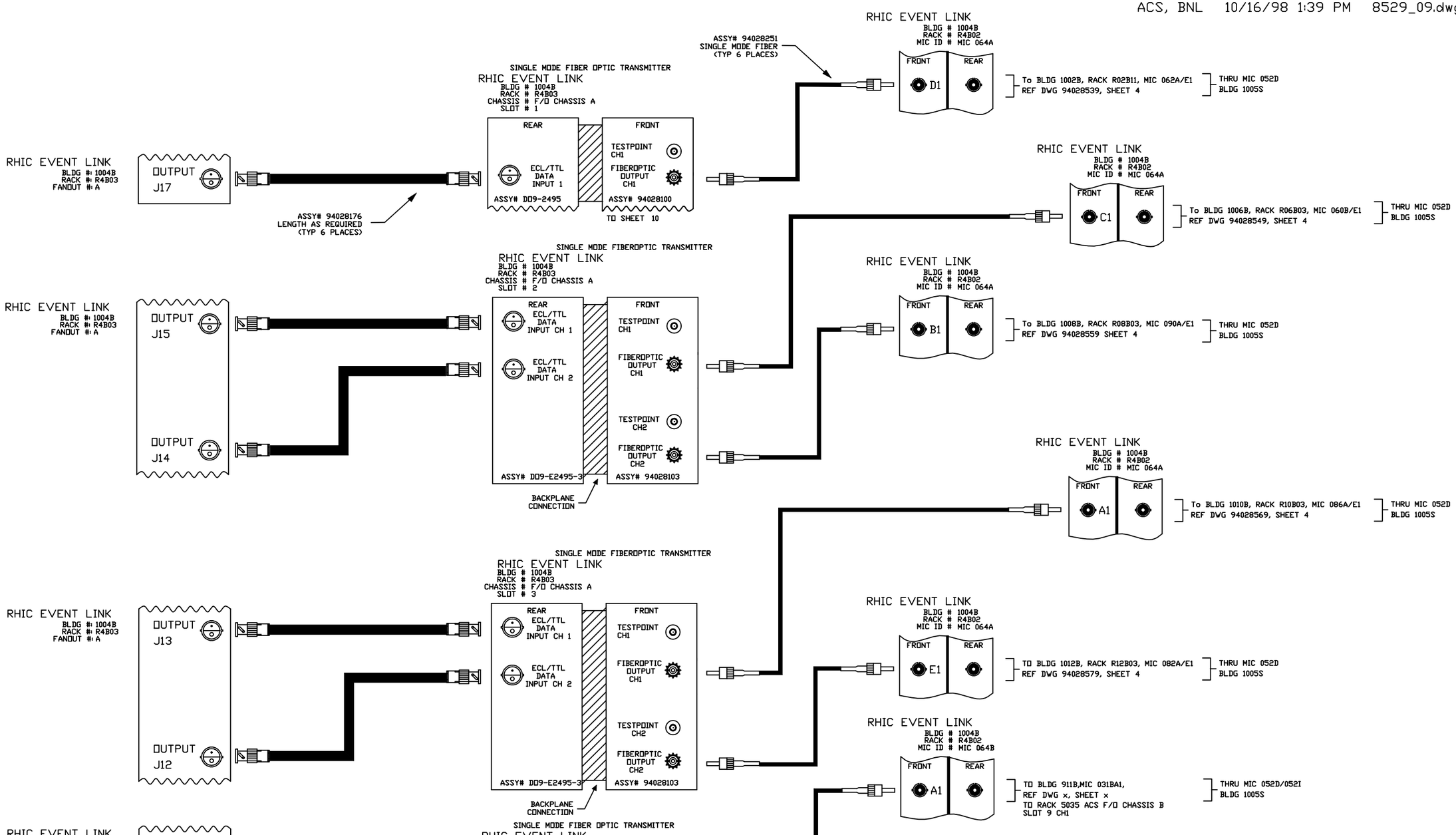

REV.	ZONE	ECN NO.	DATE	BY	CKR	APP.

-3	-2	-1	REF DESIGNATOR	ITEM NO.	DESCRIPTION	MAT'L. DWG NO.,BNL NO.
QTY REQD						

INTERPRET IN GENERAL ACCORDANCE WITH ASME Y14.24M-1989

UNLESS OTHERWISE SPECIFIED DIMENSIONS ARE IN INCHES

DECIMAL TOLERANCES
.X ±.030
.XX ±.015
.XXX ±.005
ANGULAR TOLERANCE ± .5°

NA FINISH

BREAK SHARP EDGES MAX. XX MIN. XX

OUTSTANDING ECN

Q.A. CATEGORY A-3

		DATE
DRAWN BY	Phil Pape	11/25/97
CHECKED BY		
DESIGN APPROVAL		
ENGINEER APPROVAL	R. MICHNOFF	11/25/97
SUPVR. APPROVAL		

NEXT ASSEMBLY

BROOKHAVEN NATIONAL LABORATORY
UPTON, N.Y. 11973

RHIC CONTROLS WIRING DIAGRAM
SERVICE BLDG 1004B
RHIC EVENT LINK

SIZE D | DRAWING NUMBER 94028529 | REV. A

MATERIAL: ——— SCALE: NA WEIGHT: – SHEET 9 / 101

*AUTOCAD

REV.	ZONE	ECN NO.	DATE	BY	CKR	APP.

ACS, BNL 1/28/00 1:54 PM 8529_10.dwg

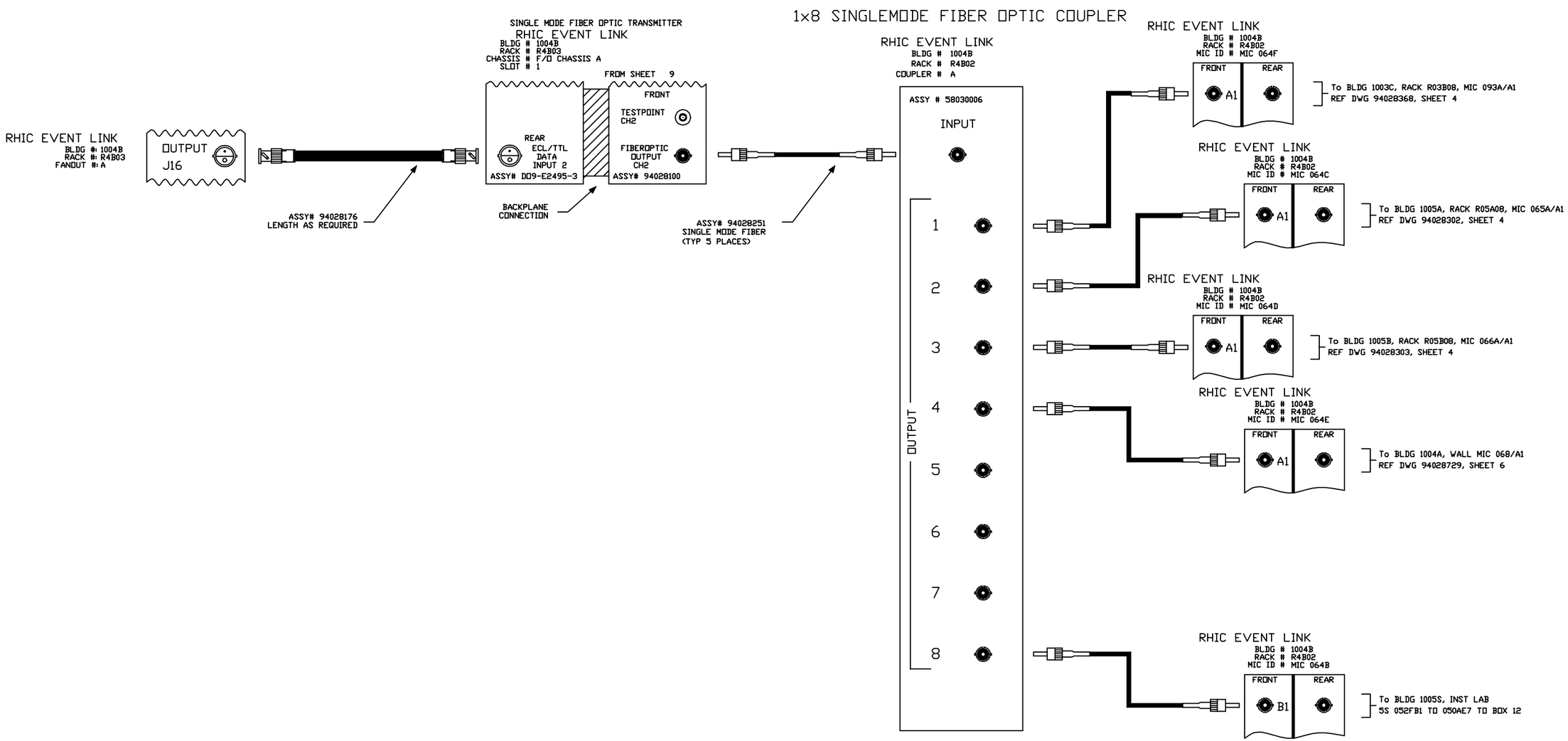

-3	-2	-1	REF DESIGNATOR	ITEM NO.	DESCRIPTION	MAT'L DWG NO./BNL NO.
QTY REQD						

INTERPRET IN GENERAL ACCORDANCE WITH ASME Y14.24M-1989

UNLESS OTHERWISE SPECIFIED DIMENSIONS ARE IN INCHES

DECIMAL TOLERANCES
.X ±.030
.XX ±.015
.XXX ±.005
ANGULAR TOLERANCE
± .5°

NA FINISH — BREAK SHARP EDGES — MAX. XX MIN. XX

OUTSTANDING ECN

Q.A. CATEGORY A-3		DATE
DRAWN BY	Phil Pape	11/26/97
CHECKED BY		
DESIGN APPROVAL		
ENGINEER APPROVAL	R. MICHNOFF	11/26/97
SUPVR. APPROVAL		

NEXT ASSEMBLY

BROOKHAVEN NATIONAL LABORATORY
UPTON, N.Y. 11973

RHIC CONTROLS WIRING DIAGRAM
SERVICE BLDG 1004B
RHIC EVENT LINK

SIZE D — DRAWING NUMBER 94028529 — REV. A

MATERIAL: ——— SCALE: NA WEIGHT: – SHEET 10 / 101

1 *AUTOCAD

ACS, BNL 1/28/00 1:57 PM 8529_11.dwg

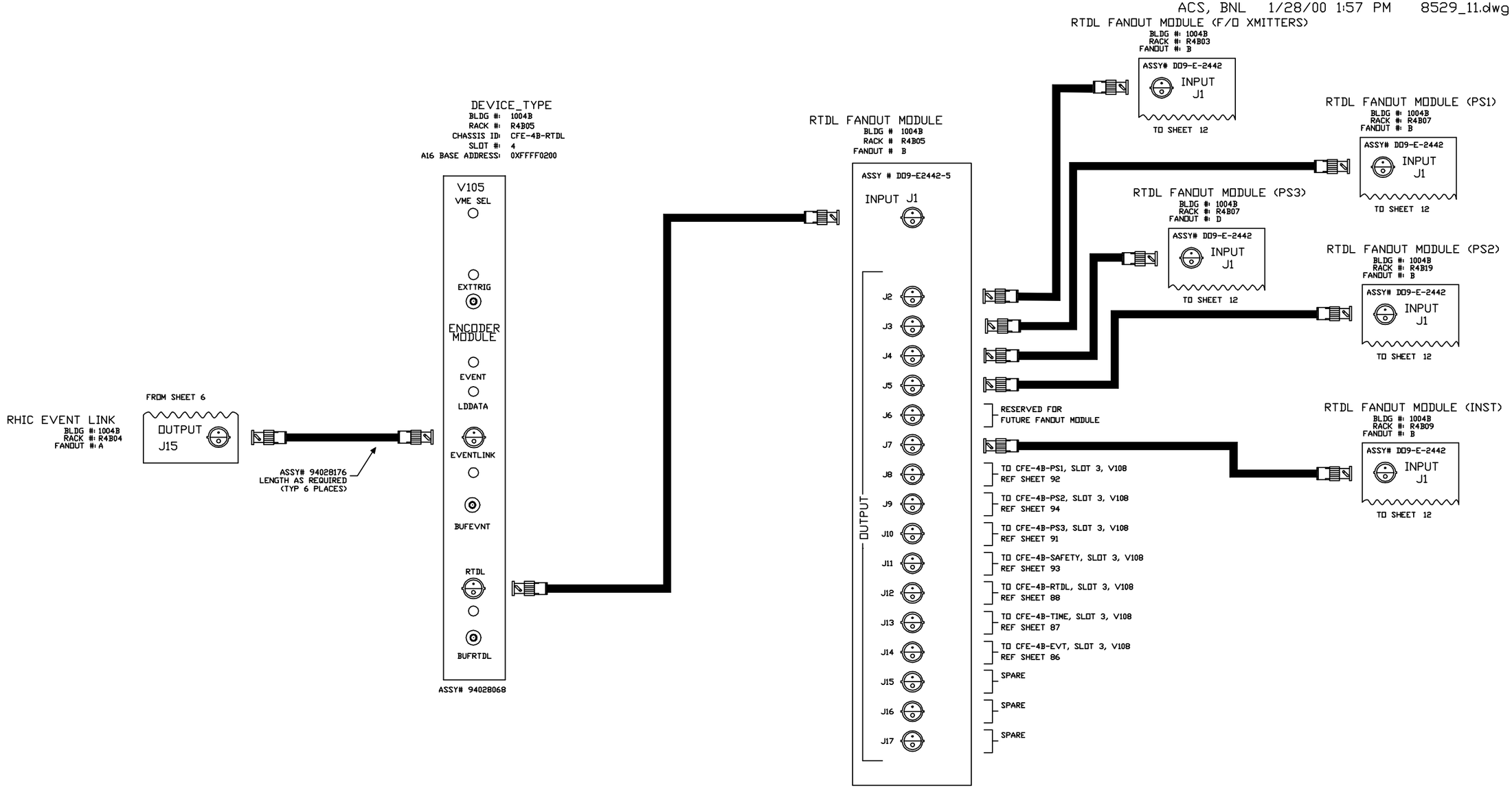

-3	-2	-1	REF DESIGNATOR	ITEM NO.	DESCRIPTION	MAT'L DWG NO./BNL NO.
QTY REQD						

INTERPRET IN GENERAL ACCORDANCE WITH ASME Y14.24M-1989

UNLESS OTHERWISE SPECIFIED DIMENSIONS ARE IN INCHES

DECIMAL TOLERANCES
.X ±.030
.XX ±.015
.XXX ±.005
ANGULAR TOLERANCE
± .5°

NA FINISH

BREAK SHARP EDGES
MAX. XX MIN. XX

OUTSTANDING ECN

Q.A. CATEGORY A-3		DATE
DRAWN BY	Phil Pape	11/25/97
CHECKED BY		
DESIGN APPROVAL		
ENGINEER APPROVAL	R. MICHNOFF	11/26/97
SUPVR. APPROVAL		

NEXT ASSEMBLY

BROOKHAVEN NATIONAL LABORATORY
UPTON, N.Y. 11973

RHIC CONTROLS WIRING DIAGRAM

SERVICE BLDG 1004B

REAL TIME DATA LINK

SIZE D | DRAWING NUMBER 94028529 | REV. A

MATERIAL: ——— SCALE: NA WEIGHT: – SHEET 11 / 101

*AUTOCAD

REV.	ZONE	ECN NO.	DATE	BY	CKR	APP.

BNL 10/19/01 2:50 PM 8529_12.dwg

RTDL FANOUT MODULE

BLDG # 1004B
RACK # R4B03
FANOUT # B

FROM SHEET 11
ASSY # DD9-E2442-5

OUTPUT	
J2	TO F/O CHASSIS B, SLOT 9, CHAN 2 FEED TO 911B RACK 5035
J3	TO CFE-4B-Q1, SLOT 3, V108 RACK BY VALVE BOX
J4	TO CFE-4B-Q2, SLOT 3, V108 RACK BY VALVE BOX
J5	SPARE
J6	SPARE
J7	SPARE
J8	SPARE
J9	SPARE
J10	SPARE
J11	SPARE
J12	To F/O CHASSIS A, SLOT 6, CHAN 2 BLDG 1012B
J13	To F/O CHASSIS A, SLOT 6, CHAN 1 BLDG 1010B
J14	To F/O CHASSIS A, SLOT 5, CHAN 2 BLDG 1008B
J15	To F/O CHASSIS A, SLOT 5, CHAN 1 BLDG 1006B
J16	To F/O CHASSIS A, SLOT 4, CHAN 2 BLDG 1004B
J17	To F/O CHASSIS A, SLOT 4, CHAN 1 BLDG 1002B

RTDL FANOUT MODULE

BLDG # 1004B
RACK # R4B07
FANOUT # B

FROM SHEET 11
ASSY # DD9-E2442-5

OUTPUT	
J2	SPARE
J3	TO CFE-4B-PS1, SLOT 20, T215 REF SHEET 65
J4	TO CFE-4B-PS1, SLOT 19, T215 REF SHEET 64
J5	TO CFE-4B-PS1, SLOT 18, T215 REF SHEET 63
J6	TO CFE-4B-PS1, SLOT 17, T215 REF SHEET 62
J7	TO CFE-4B-PS1, SLOT 16, T215 REF SHEET 61
J8	TO CFE-4B-PS1, SLOT 15, T215 REF SHEET 60
J9	TO CFE-4B-PS1, SLOT 14, T215 REF SHEET 59
J10	TO CFE-4B-PS1, SLOT 13, T215 REF SHEET 58
J11	TO CFE-4B-PS1, SLOT 12, T215 REF SHEET 57
J12	TO CFE-4B-PS1, SLOT 11, T215 REF SHEET 56
J13	TO CFE-4B-PS1, SLOT 10, T215 REF SHEET 55
J14	TO CFE-4B-PS1, SLOT 9, T215 REF SHEET 54
J15	TO CFE-4B-PS1, SLOT 8, T215 REF SHEET 53
J16	SPARE
J17	SPARE

RTDL FANOUT MODULE

BLDG # 1004B
RACK # R4B19
FANOUT # B

FROM SHEET 11
ASSY # DD9-E2442-5

OUTPUT	
J2	SPARE
J3	TO CFE-4B-PS2, SLOT 20, T215 REF SHEET 79
J4	TO CFE-4B-PS2, SLOT 19, T215 REF SHEET 78
J5	TO CFE-4B-PS2, SLOT 18, T215 REF SHEET 77
J6	TO CFE-4B-PS2, SLOT 17, T215 REF SHEET 76
J7	TO CFE-4B-PS2, SLOT 16, T215 REF SHEET 75
J8	TO CFE-4B-PS2, SLOT 15, T215 REF SHEET 74
J9	TO CFE-4B-PS2, SLOT 14, T215 REF SHEET 73
J10	TO CFE-4B-PS2, SLOT 13, T215 REF SHEET 72
J11	TO CFE-4B-PS2, SLOT 12, T215 REF SHEET 71
J12	TO CFE-4B-PS2, SLOT 11, T215 REF SHEET 70
J13	TO CFE-4B-PS2, SLOT 10, T215 REF SHEET 69
J14	TO CFE-4B-PS2, SLOT 9, T215 REF SHEET 68
J15	TO CFE-4B-PS2, SLOT 8, T215 REF SHEET 67
J16	SPARE
J17	SPARE

RTDL FANOUT MODULE

BLDG # 1004B
RACK # R4B07
FANOUT # D

FROM SHEET 11
ASSY # DD9-E2442-5

OUTPUT	
J2	SPARE
J3	SPARE
J4	TO CFE-4B-PS3, SLOT 17, T215 REF SHEET 109
J5	TO CFE-4B-PS3, SLOT 16, T215 REF SHEET 109
J6	TO CFE-4B-PS3, SLOT 15, T215 REF SHEET 108
J7	TO CFE-4B-PS3, SLOT 14, T215 REF SHEET 108
J8	TO CFE-4B-PS3, SLOT 13, T215 REF SHEET 107
J9	TO CFE-4B-PS3, SLOT 12, T215 REF SHEET 107
J10	TO CFE-4B-PS3, SLOT 11, T215 REF SHEET 105
J11	TO CFE-4B-PS3, SLOT 10, T215 REF SHEET 105
J12	TO CFE-4B-PS3, SLOT 9, T215 REF SHEET 104
J13	TO CFE-4B-PS3, SLOT 8, T215 REF SHEET 104
J14	TO CFE-4B-PS3, SLOT 7, T215 REF SHEET 103
J15	TO CFE-4B-PS3, SLOT 6, T215 REF SHEET 103
J16	TO CFE-4B-PS3, SLOT 5, T215 REF SHEET 102
J17	TO CFE-4B-PS3, SLOT 4, T215 REF SHEET 102

RTDL FANOUT MODULE

BLDG # 1004B
RACK # R4B09
FANOUT # B

FROM SHEET 11
ASSY # DD9-E2442-5

OUTPUT	
J2	CFE-4B-BLM1, SLOT 3, V108
J3	CFE-4B-BLM2, SLOT 3, V108
J4	CFE-4B-BPM1, SLOT 3, V108
J5	CFE-4B-PS4, SLOT 3, V108 REF SHEET 110
J6	TO QUENCH DETECT CHASSIS RACK R4B24
J7	SPARE
J8	SPARE
J9	SPARE
J10	SPARE
J11	SPARE
J12	SPARE
J13	SPARE
J14	SPARE
J15	SPARE
J16	SPARE
J17	SPARE

-3	-2	-1	REF DESIGNATOR	ITEM NO.	DESCRIPTION	MAT'L. DWG NO.,BNL NO.
QTY REQD						

INTERPRET IN GENERAL ACCORDANCE WITH ASME Y14.24M-1989

UNLESS OTHERWISE SPECIFIED DIMENSIONS ARE IN INCHES

DECIMAL TOLERANCES
.X ±.030
.XX ±.015
.XXX ±.005
ANGULAR TOLERANCE ± .5°

OUTSTANDING ECN

NA FINISH

BREAK SHARP EDGES MAX. XX MIN. XX

Q.A. CATEGORY A-3		DATE
DRAWN BY	Phil Pape	11/26/97
CHECKED BY		
DESIGN APPROVAL		
ENGINEER APPROVAL	R. MICHNOFF	11/26/97
SUPVR. APPROVAL		
NEXT ASSEMBLY		

BROOKHAVEN NATIONAL LABORATORY
UPTON, N.Y. 11973

RHIC CONTROLS WIRING DIAGRAM
SERVICE BLDG, 1004B

REAL TIME DATA LINK

SIZE D
94028529 DRAWING NUMBER
REV. A

MATERIAL: ——— SCALE: NA WEIGHT: — SHEET 12

*AUTOCAD

ACS, BNL 10/16/98 1:45 PM 8529_13.dwg

REV.	ZONE	ECN NO.	DATE	BY	CKR	APP.

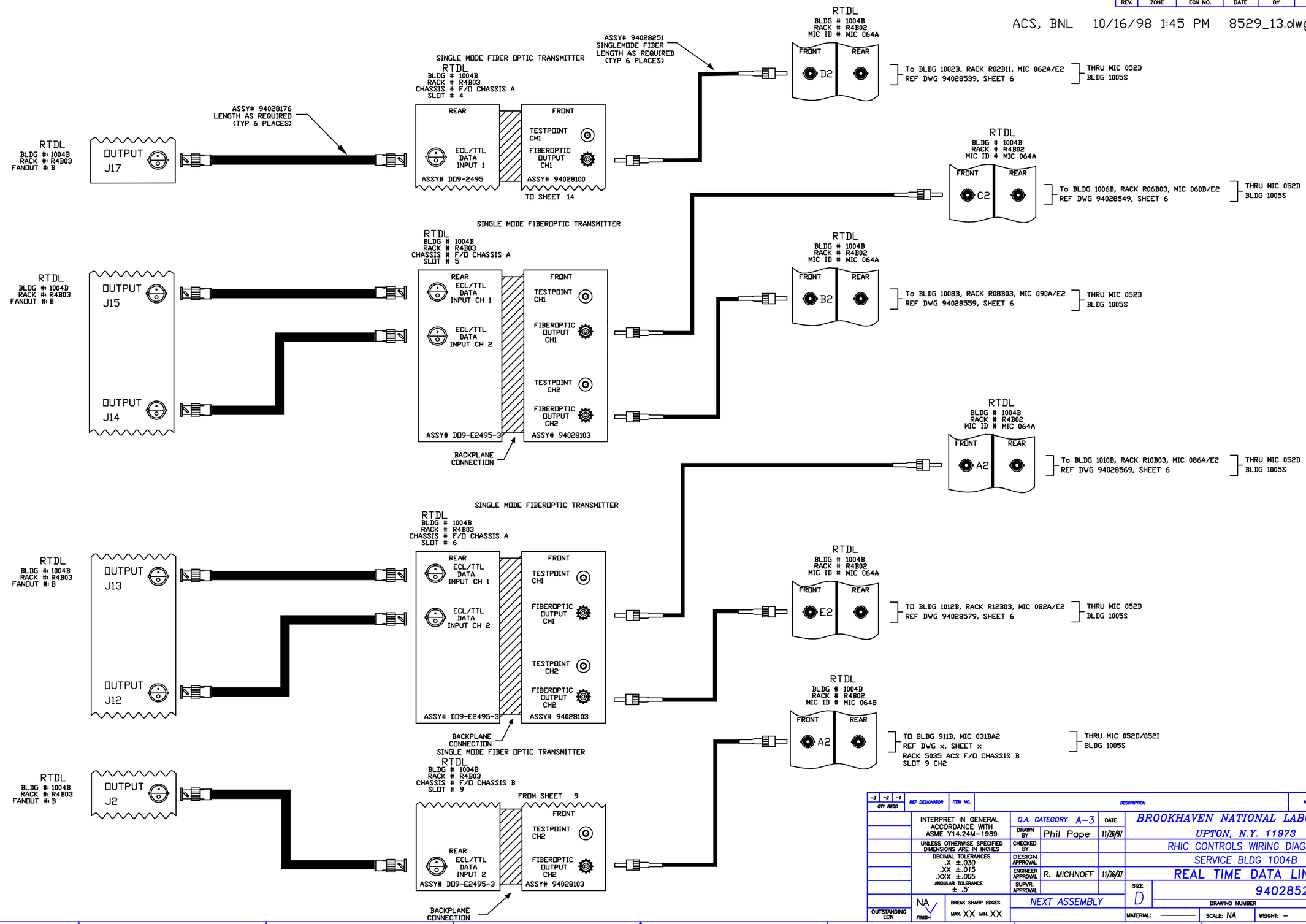

-3	-2	-1	REF DESIGNATOR	ITEM NO.	DESCRIPTION	MAT'L DWG NO./BNL NO.
QTY REQD						

INTERPRET IN GENERAL ACCORDANCE WITH ASME Y14.24M-1989	Q.A. CATEGORY A-3	DATE	BROOKHAVEN NATIONAL LABORATORY
	DRAWN BY Phil Pape	11/26/97	UPTON, N.Y. 11973
UNLESS OTHERWISE SPECIFIED DIMENSIONS ARE IN INCHES	CHECKED BY		RHIC CONTROLS WIRING DIAGRAM
DECIMAL TOLERANCES .X ±.030 .XX ±.015 .XXX ±.005 ANGULAR TOLERANCE ± .5°	DESIGN APPROVAL		SERVICE BLDG 1004B
	ENGINEER APPROVAL R. MICHNOFF	11/26/97	REAL TIME DATA LINK
	SUPVR. APPROVAL		SIZE D / DRAWING NUMBER 94028529 / REV. A
OUTSTANDING ECN / NA FINISH	BREAK SHARP EDGES MAX. XX MIN. XX	NEXT ASSEMBLY	MATERIAL: ——— SCALE: NA WEIGHT: – SHEET 13 of XX

1 *AUTOCAD

REV.	ZONE	ECN NO.	DATE	BY	CKR	APP.

ACS, BNL 8/26/99 3:31 PM 8529_14.dwg

1x8 SINGLEMODE FIBER OPTIC COUPLER

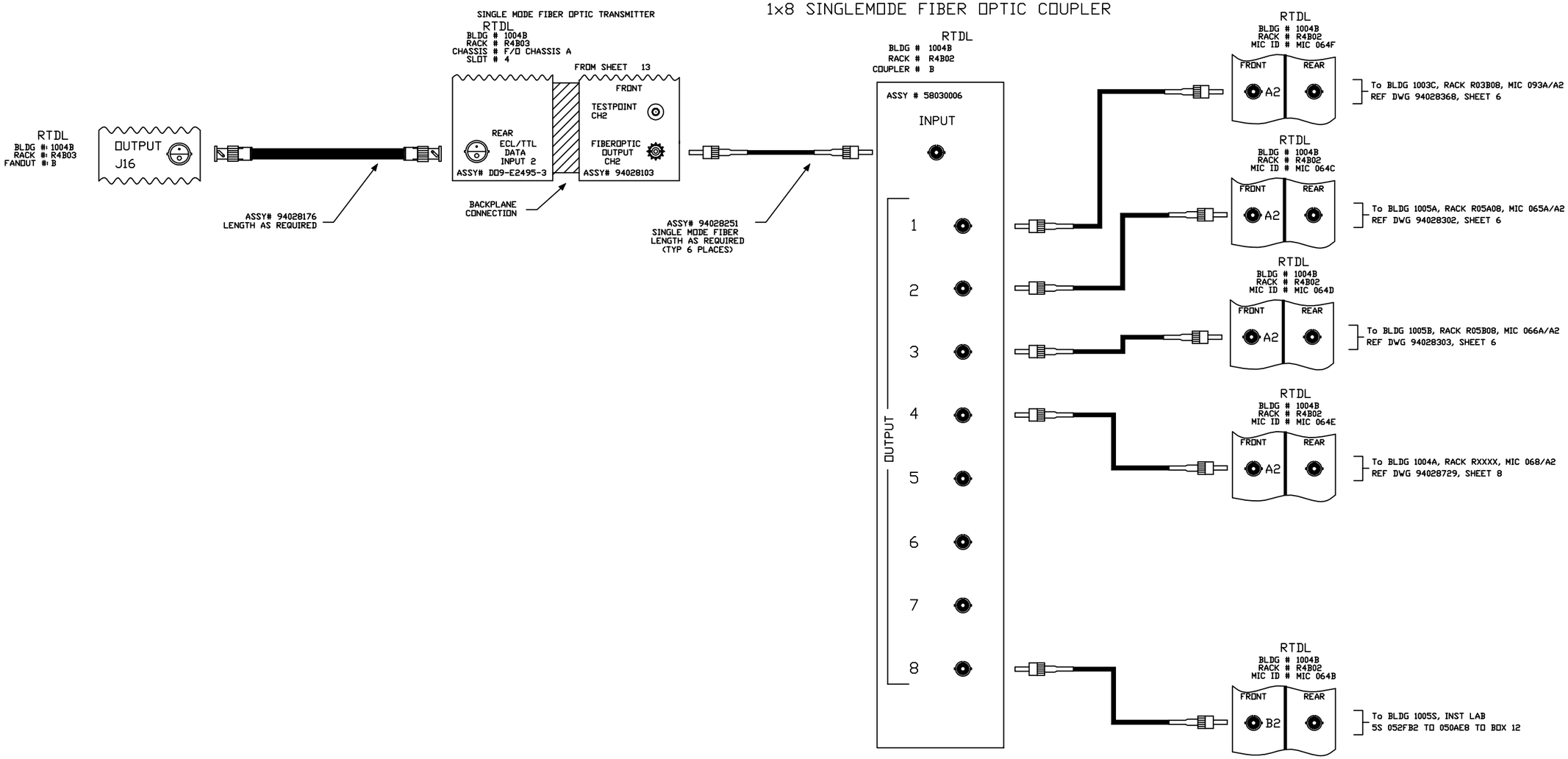

-3	-2	-1	REF DESIGNATOR	ITEM NO.	DESCRIPTION	MAT'L DWG NO./BNL NO.
QTY REQD						

INTERPRET IN GENERAL ACCORDANCE WITH ASME Y14.24M-1989

UNLESS OTHERWISE SPECIFIED DIMENSIONS ARE IN INCHES

DECIMAL TOLERANCES
.X ±.030
.XX ±.015
.XXX ±.005
ANGULAR TOLERANCE
± .5°

NA FINISH

BREAK SHARP EDGES
MAX. XX MIN. XX

OUTSTANDING ECN

Q.A. CATEGORY A-3		DATE
DRAWN BY	Phil Pape	11/26/97
CHECKED BY		
DESIGN APPROVAL		
ENGINEER APPROVAL	R. MICHNOFF	11/26/97
SUPVR. APPROVAL		

NEXT ASSEMBLY

BROOKHAVEN NATIONAL LABORATORY
UPTON, N.Y. 11973

RHIC CONTROLS WIRING DIAGRAM
SERVICE BLDG 1004B
REAL TIME DATA LINK

SIZE D
DRAWING NUMBER 94028529
REV. A

MATERIAL: ——— SCALE: NA WEIGHT: – SHEET 14 OF XX

*AUTOCAD

ACS, BNL 12/23/98 11:39 AM 8529_15.dwg

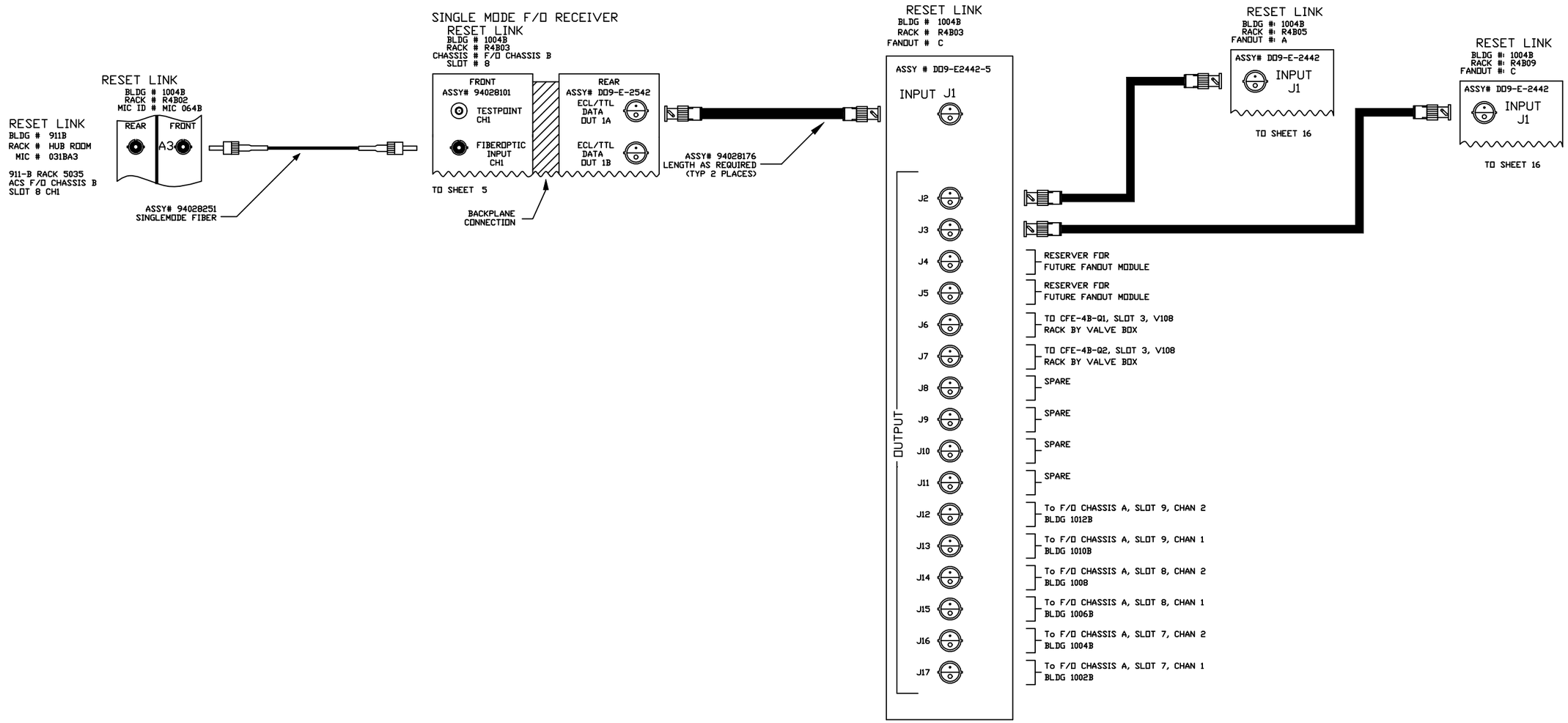

-3	-2	-1	REF DESIGNATOR	ITEM NO.	DESCRIPTION	MAT'L. DWG NO./BNL NO.
QTY REQD						

INTERPRET IN GENERAL ACCORDANCE WITH ASME Y14.24M-1989

UNLESS OTHERWISE SPECIFIED DIMENSIONS ARE IN INCHES

DECIMAL TOLERANCES
X ±.030
.XX ±.015
.XXX ±.005
ANGULAR TOLERANCE
± .5°

NA FINISH

BREAK SHARP EDGES
MAX. XX MIN. XX

OUTSTANDING ECN

Q.A. CATEGORY A-3		DATE
DRAWN BY	Phil Pape	11/26/97
CHECKED BY		
DESIGN APPROVAL		
ENGINEER APPROVAL	R. MICHNOFF	11/26/97
SUPVR. APPROVAL		

NEXT ASSEMBLY

BROOKHAVEN NATIONAL LABORATORY
UPTON, N.Y. 11973

RHIC CONTROLS WIRING DIAGRAM
SERVICE BLDG 1004B
RESET LINK

SIZE D | DRAWING NUMBER 94028529 | REV. A

MATERIAL: ——— SCALE: NA WEIGHT: – SHEET 15 OF XX

*AUTOCAD

REV.	ZONE	ECN NO.	DATE	BY	CKR	APP.

BNL 10/22/01 1:16 PM 8529_16.dwg

RESET LINK

BLDG # 1004B
RACK # R4B05
FANOUT # A

FROM SHEET 15
ASSY # DD9-E2442-5

OUTPUT

J2	SPARE
J3	SPARE
J4	SPARE
J5	SPARE
J6	SPARE
J7	SPARE
J8	To CFE-4B-PS1, SLOT 3, V108 REF SHEET 92
J9	To CFE-4B-PS2, SLOT 3, V108 REF SHEET 94
J10	To CFE-4B-PS3, SLOT 3, V108 REF SHEET 91
J11	To CFE-4B-SAFETY, SLOT 3, V108 REF SHEET 93
J12	To CFE-4B-RTDL, SLOT 3, V108 REF SHEET 88
J13	TO CFE-4B-TIME, SLOT 3, V108 REF SHEET 87
J14	TO CFE-4B-EVT, SLOT 3, V108 REF SHEET 86
J15	SPARE
J16	SPARE
J17	SPARE

RESET LINK

BLDG # 1004B
RACK # R4B09
FANOUT # C

FROM SHEET 15
ASSY # DD9-E2442-5

OUTPUT

J2	CFE-4B-BLM1, SLOT 3, V108
J3	CFE-4B-BLM2, SLOT 3, V108
J4	CFE-4B-BPM1, SLOT 3, V108
J5	CFE-4B-PS4, SLOT 3, V108 REF SHEET 110
J6	TO AC POWER RESET MODULE R4B06
J7	TO AC POWER RESET MODULE R4B09, BLM
J8	SPARE
J9	TO QUENCH DETECT CHASSIS RACK R4B24
J10	SPARE
J11	SPARE
J12	SPARE
J13	TO AC RESET R4B10
J14	TO AC RESET R4B06
J15	TO AC RESET R4B19
J16	TO AC POWER RESET MODULE R4B08
J17	TO AC POWER RESET MODULE R4B08

-3	-2	-1	REF DESIGNATOR	ITEM NO.	DESCRIPTION	MAT'L. DWG NO.,BNL NO.
QTY REQD						

INTERPRET IN GENERAL ACCORDANCE WITH ASME Y14.24M-1989

UNLESS OTHERWISE SPECIFIED DIMENSIONS ARE IN INCHES

DECIMAL TOLERANCES
.X ±.030
.XX ±.015
.XXX ±.005
ANGULAR TOLERANCE ± .5°

OUTSTANDING ECN

NA FINISH

BREAK SHARP EDGES MAX. XX MIN. XX

Q.A. CATEGORY A-3		DATE
DRAWN BY	Phil Pape	11/26/97
CHECKED BY		
DESIGN APPROVAL		
ENGINEER APPROVAL	R. MICHNOFF	11/26/97
SUPVR. APPROVAL		
NEXT ASSEMBLY		

BROOKHAVEN NATIONAL LABORATORY
UPTON, N.Y. 11973

RHIC CONTROLS WIRING DIAGRAM
SERVICE BLDG, 1004B

RESET LINK

SIZE D
94028529
DRAWING NUMBER
REV. A

MATERIAL: ——— SCALE: NA WEIGHT: — SHEET 16

*AUTOCAD

ACS, BNL 10/16/98 1:52 PM 8529_17.dwg

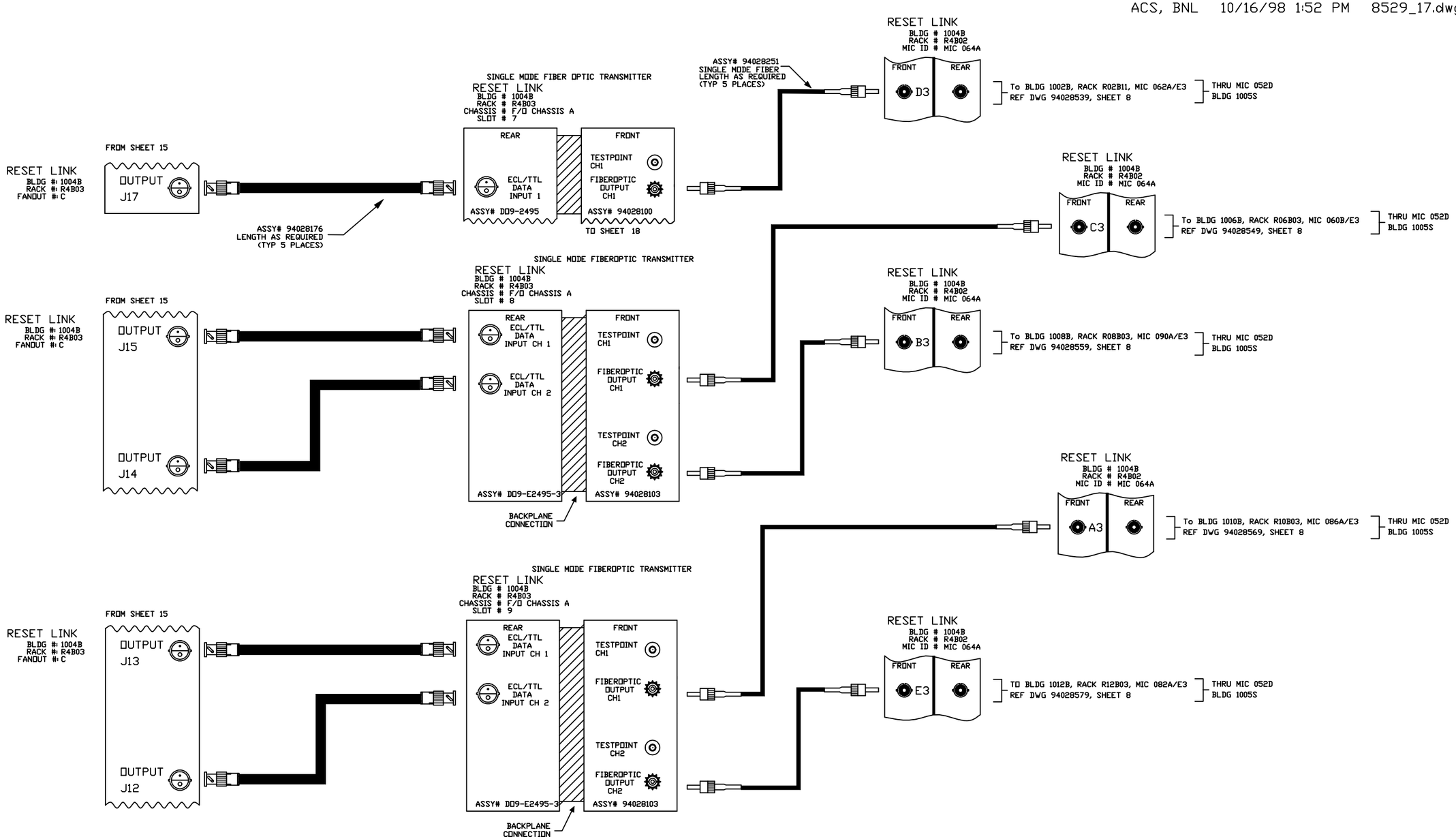

REV.	ZONE	ECN NO.	DATE	BY	CKR	APP.

-3	-2	-1	REF DESIGNATOR	ITEM NO.	DESCRIPTION	MAT'L. DWG NO.,BNL NO.
QTY REQD						

INTERPRET IN GENERAL ACCORDANCE WITH ASME Y14.24M-1989

UNLESS OTHERWISE SPECIFIED DIMENSIONS ARE IN INCHES

DECIMAL TOLERANCES
.X ±.030
.XX ±.015
.XXX ±.005
ANGULAR TOLERANCE
± .5°

NA FINISH

BREAK SHARP EDGES
MAX. XX MIN. XX

OUTSTANDING ECN

Q.A. CATEGORY A-3

		DATE
DRAWN BY	Phil Pape	11/26/97
CHECKED BY		
DESIGN APPROVAL		
ENGINEER APPROVAL	R. MICHNOFF	11/26/97
SUPVR. APPROVAL		

NEXT ASSEMBLY

BROOKHAVEN NATIONAL LABORATORY
UPTON, N.Y. 11973

RHIC CONTROLS WIRING DIAGRAM
SERVICE BLDG 1004B

RESET LINK

SIZE D | DRAWING NUMBER 94028529 | REV. A

MATERIAL: ——— SCALE: NA WEIGHT: – SHEET 17 of XX

*AUTOCAD

REV.	ZONE	ECN NO.	DATE	BY	CKR	APP.

ACS, BNL 8/26/99 3:35 PM 8529_18.dwg

1x8 SINGLEMODE FIBER OPTIC COUPLER

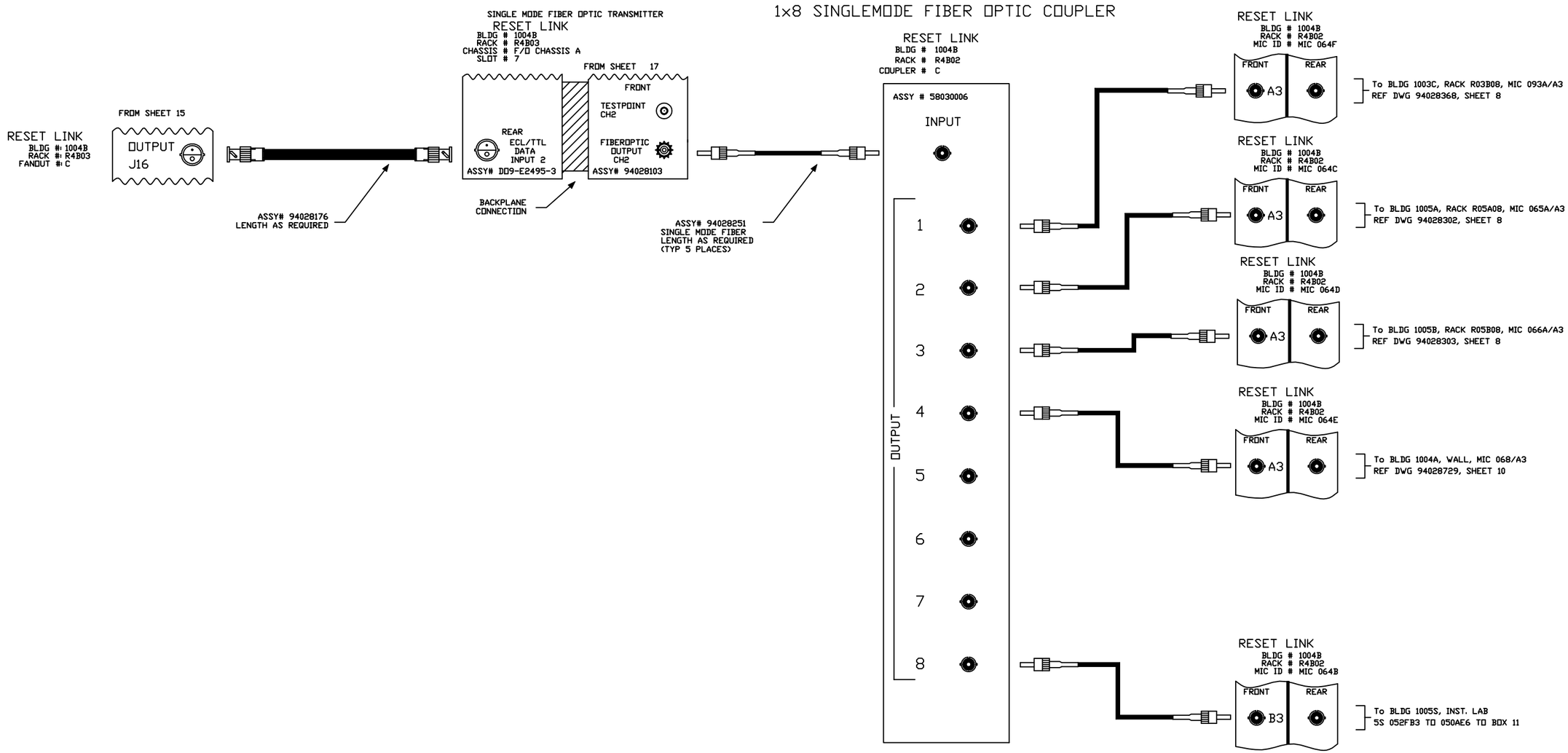

-3	-2	-1	REF DESIGNATOR	ITEM NO.	DESCRIPTION	MAT'L DWG NO./BNL NO.
QTY REQD						

INTERPRET IN GENERAL ACCORDANCE WITH ASME Y14.24M-1989

UNLESS OTHERWISE SPECIFIED DIMENSIONS ARE IN INCHES

DECIMAL TOLERANCES
.X ±.030
.XX ±.015
.XXX ±.005
ANGULAR TOLERANCE
± .5°

NA FINISH

BREAK SHARP EDGES
MAX. XX MIN. XX

OUTSTANDING ECN

Q.A. CATEGORY A-3		DATE
DRAWN BY	Phil Pape	11/26/97
CHECKED BY		
DESIGN APPROVAL		
ENGINEER APPROVAL	R. MICHNOFF	11/26/97
SUPVR. APPROVAL		

NEXT ASSEMBLY

BROOKHAVEN NATIONAL LABORATORY
UPTON, N.Y. 11973

RHIC CONTROLS WIRING DIAGRAM
SERVICE BLDG 1004B
RESET LINK

SIZE D | DRAWING NUMBER 94028529 | REV. A

MATERIAL: ——— SCALE: NA WEIGHT: – SHEET 18 OF XX

1 *AUTOCAD

ACS, BNL 8/26/99 3:43 PM 8529_19.dwg

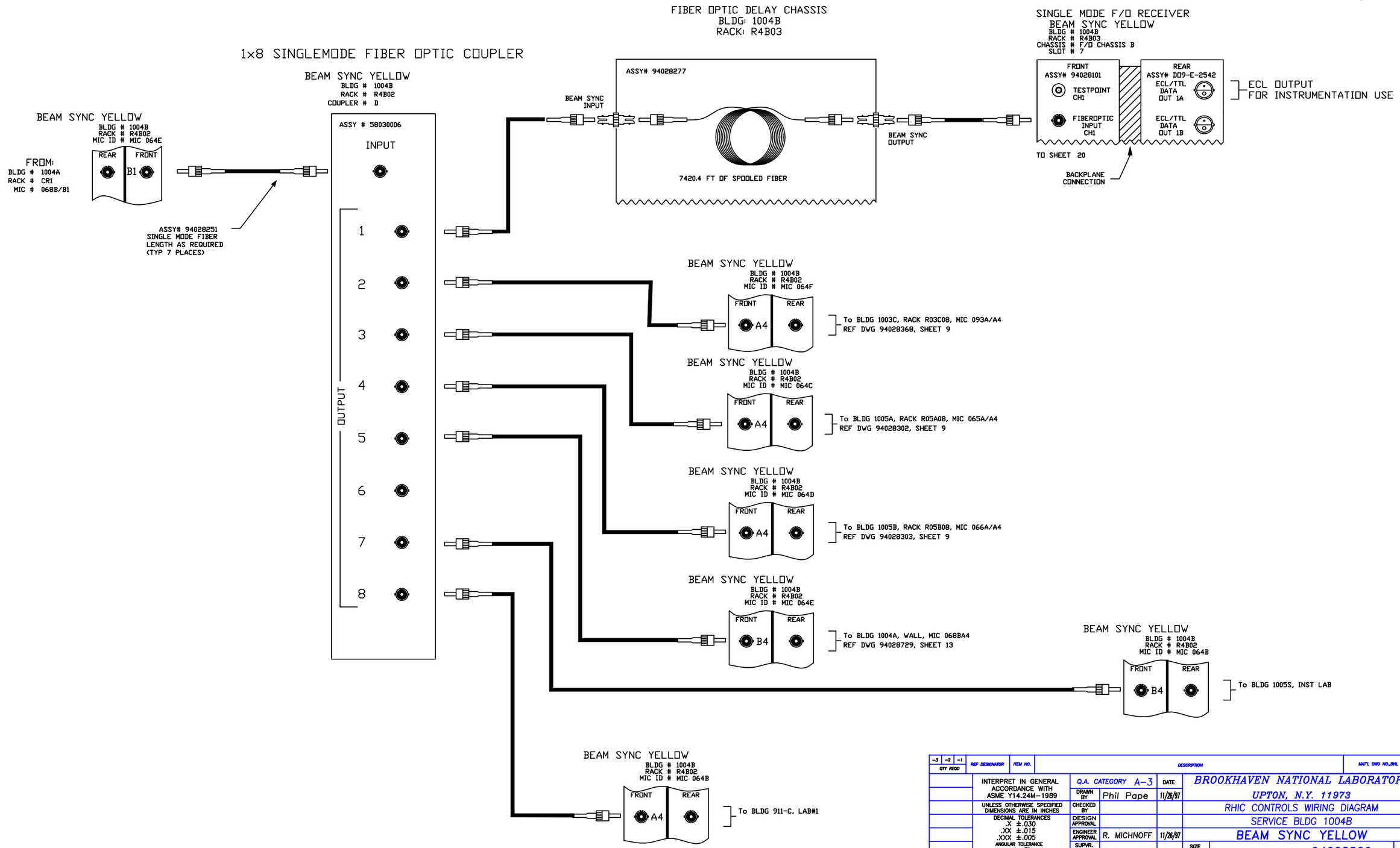

REV.	ZONE	ECN NO.	DATE	BY	CKR	APP.

-3	-2	-1	REF DESIGNATOR	ITEM NO.	DESCRIPTION	MAT'L. DWG NO.,BNL NO.
QTY REQD						

INTERPRET IN GENERAL ACCORDANCE WITH ASME Y14.24M-1989

UNLESS OTHERWISE SPECIFIED DIMENSIONS ARE IN INCHES

DECIMAL TOLERANCES
.X ±.030
.XX ±.015
.XXX ±.005
ANGULAR TOLERANCE ± .5°

OUTSTANDING ECN

NA FINISH

BREAK SHARP EDGES
MAX. XX MIN. XX

Q.A. CATEGORY A-3		DATE
DRAWN BY	Phil Pape	11/26/97
CHECKED BY		
DESIGN APPROVAL		
ENGINEER APPROVAL	R. MICHNOFF	11/26/97
SUPVR. APPROVAL		

NEXT ASSEMBLY

BROOKHAVEN NATIONAL LABORATORY
UPTON, N.Y. 11973

RHIC CONTROLS WIRING DIAGRAM
SERVICE BLDG 1004B
BEAM SYNC YELLOW

SIZE D
94028529
DRAWING NUMBER
REV. A

MATERIAL: ——— SCALE: NA WEIGHT: — SHEET 19 OF XX

*AUTOCAD

ACS, BNL 8/26/99 3:46 PM 8529_20.dwg

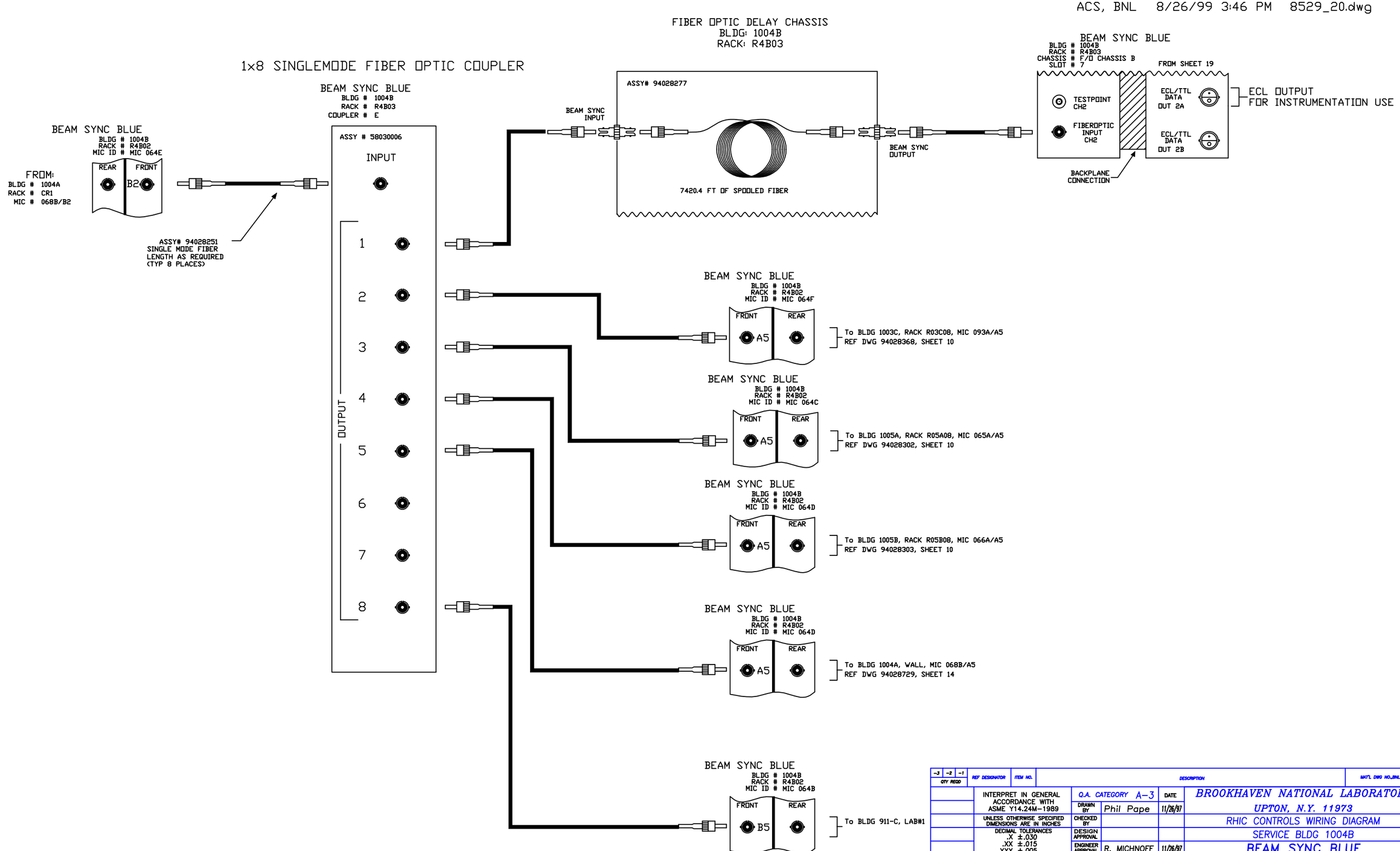

REV.	ZONE	ECN NO.	DATE	BY	CKR	APP.

-3	-2	-1	REF DESIGNATOR	ITEM NO.	DESCRIPTION	MAT'L DWG NO./INL NO.
QTY REQD						

INTERPRET IN GENERAL ACCORDANCE WITH ASME Y14.24M-1989

UNLESS OTHERWISE SPECIFIED DIMENSIONS ARE IN INCHES

DECIMAL TOLERANCES
.X ±.030
.XX ±.015
.XXX ±.005
ANGULAR TOLERANCE
± .5°

NA FINISH

BREAK SHARP EDGES
MAX. XX MIN. XX

OUTSTANDING ECN

Q.A. CATEGORY A-3		DATE
DRAWN BY	Phil Pape	11/26/97
CHECKED BY		
DESIGN APPROVAL		
ENGINEER APPROVAL	R. MICHNOFF	11/26/97
SUPVR. APPROVAL		

NEXT ASSEMBLY

BROOKHAVEN NATIONAL LABORATORY
UPTON, N.Y. 11973

RHIC CONTROLS WIRING DIAGRAM
SERVICE BLDG 1004B
BEAM SYNC BLUE

SIZE D | DRAWING NUMBER 94028529 | REV. A

MATERIAL: ——— SCALE: NA WEIGHT: – SHEET 20 OF XX

*AUTOCAD

REV.	ZONE	ECN NO.	DATE	BY	CKR	APP.

BNL, BNL 5/5/00 2:13 PM 8529_21.dwg

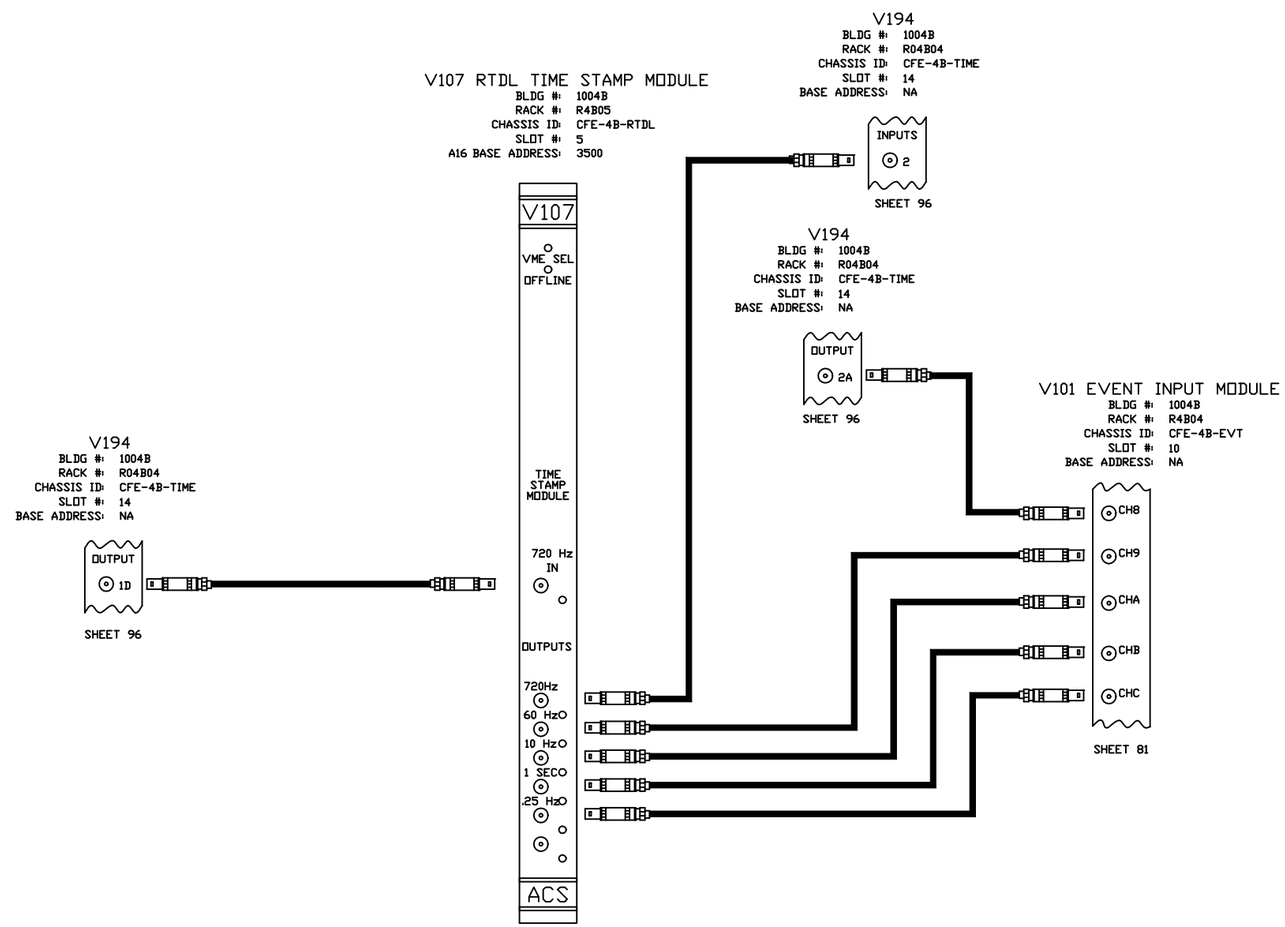

-3	-2	-1	REF DESIGNATOR	ITEM NO.	DESCRIPTION	MAT'L DWG NO.,BNL NO.
QTY REQD						

INTERPRET IN GENERAL ACCORDANCE WITH ASME Y14.24M-1989

UNLESS OTHERWISE SPECIFIED DIMENSIONS ARE IN INCHES

DECIMAL TOLERANCES
.X ±.030
.XX ±.015
.XXX ±.005
ANGULAR TOLERANCE
± .5°

NA FINISH

BREAK SHARP EDGES
MAX. XX MIN. XX

OUTSTANDING ECN

Q.A. CATEGORY A-3		DATE
DRAWN BY	Ed Koropsak	8/27/99
CHECKED BY		
DESIGN APPROVAL		
ENGINEER APPROVAL	R. MICHNOFF	8/27/99
SUPVR. APPROVAL		

NEXT ASSEMBLY

BROOKHAVEN NATIONAL LABORATORY
UPTON, N.Y. 11973

RHIC CONTROLS WIRING DIAGRAM
SERVICE BLDG 1004B
TIME STAMP MODULE

SIZE D
DRAWING NUMBER 94028529
REV. A

MATERIAL: ——— SCALE: NA WEIGHT: – SHEET 21 OF XX

*AUTOCAD

REV.	ZONE	ECN NO.	DATE	BY	CKR	APP.

Phil Pape, Controls Division 9/12/2002 3:43 PM 8529_22.dwg

RTDL INPUT MODULE

BLDG #: 1004B
RACK #: R4B05
CHASSIS ID: CFE-4B-RTDL
SLOT #: 11
A16 BASE ADDRESS: B000

ADDRESS

E44 TO E36-OUT
E43 TO E35-IN
E42 TO E34-OUT
E41 TO E33-OUT
E40 TO E32-IN
E39 TO E31-IN
E38 TO E30-IN
E37 TO E29-IN

PARM ID

E71 TO E79-IN
E72 TO E80-IN
E73 TO E81-OUT
E74 TO E82-IN
E75 TO E83-IN
E76 TO E84-IN
E77 TO E85-IN
E78 TO E86-IN

NAME XX
FROM R4B19 COUPLER B #5
REF SHEET x
SERIAL LINK CODE 0xB0
RTDL PARM ID 0x20

E65 TO E68-OUT
E66 TO E69-OUT
E67 TO E70-OUT

NAME XX
FROM R4B19 COUPLER C #4
REF SHEET x
SERIAL LINK CODE 0xB0
RTDL PARM ID 0x21

E87 TO E90-OUT
E88 TO E91-OUT
E89 TO E92-OUT

PARM ID

E93 TO E101-IN
E94 TO E102-IN
E95 TO E103-OUT
E96 TO E104-IN
E97 TO E105-IN
E98 TO E106-IN
E99 TO E107-IN
E100 TO E108-OUT

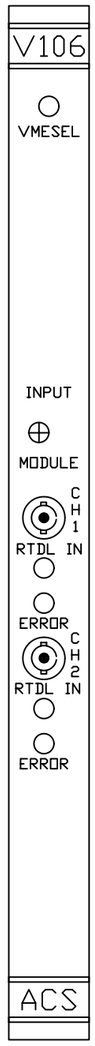

RTDL INPUT MODULE

BLDG #: 1004B
RACK #: R4B05
CHASSIS ID: CFE-4B-RTDL
SLOT #: 12
A16 BASE ADDRESS: B100

ADDRESS

E44 TO E36-OUT
E43 TO E35-IN
E42 TO E34-OUT
E41 TO E33-OUT
E40 TO E32-IN
E39 TO E31-IN
E38 TO E30-IN
E37 TO E29-OUT

PARM ID

E71 TO E79-IN
E72 TO E80-IN
E73 TO E81-IN
E74 TO E82-IN
E75 TO E83-IN
E76 TO E84-IN
E77 TO E85-IN
E78 TO E86-OUT

RT-BDISET2
FROM R4B17 COUPLER B #5
REF SHEET x
SERIAL LINK CODE 0xB5
RTDL PARM ID 0x54

E65 TO E68-OUT
E66 TO E69-OUT
E67 TO E70-OUT

RT-BQISET2
FROM R4B17 COUPLER C #5
REF SHEET x
SERIAL LINK CODE 0xB5
RTDL PARM ID 0x55

E87 TO E90-OUT
E88 TO E91-OUT
E89 TO E92-OUT

PARM ID

E93 TO E101-IN
E94 TO E102-IN
E95 TO E103-IN
E96 TO E104-IN
E97 TO E105-IN
E98 TO E106-IN
E99 TO E107-OUT
E100 TO E108-IN

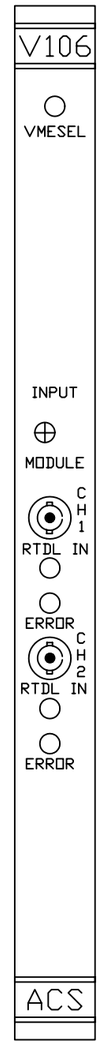

-3	-2	-1	REF DESIGNATOR	ITEM NO.	DESCRIPTION	MAT'L DWG NO./BNL NO.
QTY REQD						

INTERPRET IN GENERAL ACCORDANCE WITH ASME Y14.24M-1989

UNLESS OTHERWISE SPECIFIED DIMENSIONS ARE IN INCHES

DECIMAL TOLERANCES
.X ±.030
.XX ±.015
.XXX ±.005
ANGULAR TOLERANCE
± .5°

NA FINISH — BREAK SHARP EDGES — MAX. XX MIN. XX

OUTSTANDING ECN

Q.A. CATEGORY A-3 — DATE

DRAWN BY PAPE 09/12/2002
CHECKED BY
DESIGN APPROVAL
ENGINEER APPROVAL H. HARTMANN
SUPVR. APPROVAL

NEXT ASSEMBLY

BROOKHAVEN NATIONAL LABORATORY
UPTON, N.Y. 11973

RHIC CONTROLS WIRING DIAGRAM
SERVICE BLDG 1004B
RTDL INPUTS

SIZE D — DRAWING NUMBER 94028529 — REV. A

MATERIAL: ——— SCALE: NA WEIGHT: – SHEET 22 OF XX

*AUTOCAD

REV.	ZONE	ECN NO.	DATE	BY	CKR	APP.

THIS PAGE IS BLANK!

-3	-2	-1	REF DESIGNATOR	ITEM NO.	DESCRIPTION	MAT'L. DWG NO.,BNL NO.
QTY REQD						

INTERPRET IN GENERAL ACCORDANCE WITH ASME Y14.24M-1989

UNLESS OTHERWISE SPECIFIED DIMENSIONS ARE IN INCHES

DECIMAL TOLERANCES
.X ±.030
.XX ±.015
.XXX ±.005
ANGULAR TOLERANCE
± .5°

FINISH: NA

BREAK SHARP EDGES
MAX. XX MIN. XX

OUTSTANDING ECN

Q.A. CATEGORY A-3		DATE
DRAWN BY	Ed Koropsak	9/28/98
CHECKED BY		
DESIGN APPROVAL		
ENGINEER APPROVAL	R. MICHNOFF	9/28/98
SUPVR. APPROVAL		

NEXT ASSEMBLY

BROOKHAVEN NATIONAL LABORATORY
UPTON, N.Y. 11973

RHIC CONTROLS WIRING DIAGRAM
SERVICE BLDG 1004B
RTDL INPUTS

SIZE: D
DRAWING NUMBER: 94028529
REV.: A

MATERIAL: ——— SCALE: NA WEIGHT: – SHEET 23 OF XX

ACS, BNL 12/2/98 5:16 PM 8529_23.dwg

*AUTOCAD

REV.	ZONE	ECN NO.	DATE	BY	CKR	APP.

RTDL INPUT MODULE (1-0)

BLDG #: 1004B
RACK #: R4B05
CHASSIS ID: CEX-4B-RTDL1
SLOT #: 5
A16 BASE ADDRESS: 5000

ADDRESS
E44 TO E36-IN
E43 TO E35-OUT
E42 TO E34-IN
E41 TO E33-OUT
E40 TO E32-IN
E39 TO E31-IN
E38 TO E30-IN
E37 TO E29-IN

PARM ID
E71 TO E79-IN
E72 TO E80-IN
E73 TO E81-IN
E74 TO E82-IN
E75 TO E83-IN
E76 TO E84-IN
E77 TO E85-IN
E78 TO E86-OUT

rt-ydiset
FROM 1x2 B OUTPUT 1 RACK R4B19
REF SHEET 79
SERIAL LINK CODE 0x5X
RTDL PARM ID 0x01
E65 TO E68-IN
E66 TO E69-IN
E67 TO E70-OUT

rt-ydi
FROM 1x5 B OUTPUT 2 RACK R4B19
REF SHEET 79
SERIAL LINK CODE 0x8X
RTDL PARM ID 0x02
E87 TO E90-OUT
E88 TO E91-IN
E89 TO E92-IN

PARM ID
E93 TO E101-IN
E94 TO E102-IN
E95 TO E103-IN
E96 TO E104-IN
E97 TO E105-IN
E98 TO E106-IN
E99 TO E107-OUT
E100 TO E108-IN

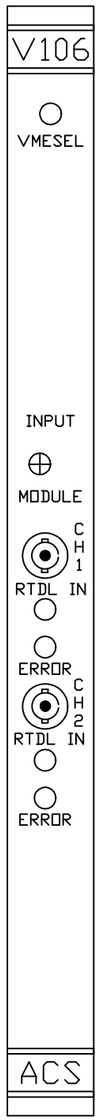

RTDL INPUT MODULE (1-1)

BLDG #: 1004B
RACK #: R4B05
CHASSIS ID: CEX-4B-RTDL1
SLOT #: 6
A16 BASE ADDRESS: 5100

ADDRESS
E44 TO E36-IN
E43 TO E35-OUT
E42 TO E34-IN
E41 TO E33-OUT
E40 TO E32-IN
E39 TO E31-IN
E38 TO E30-IN
E37 TO E29-OUT

PARM ID
E71 TO E79-IN
E72 TO E80-IN
E73 TO E81-IN
E74 TO E82-IN
E75 TO E83-IN
E76 TO E84-IN
E77 TO E85-OUT
E78 TO E86-OUT

rt-ydv
FROM 1x5 B OUTPUT 3 RACK R4B19
REF SHEET 79
SERIAL LINK CODE 0x9X
RTDL PARM ID 0x03
E65 TO E68-OUT
E66 TO E69-IN
E67 TO E70-OUT

rt-ydidot
FROM 1x5 B OUTPUT 4 RACK R4B19
REF SHEET 79
SERIAL LINK CODE 0xAX
PARM ID 0x04
E87 TO E90-OUT
E88 TO E91-OUT
E89 TO E92-IN

PARM ID
E93 TO E101-IN
E94 TO E102-IN
E95 TO E103-IN
E96 TO E104-IN
E97 TO E105-IN
E98 TO E106-OUT
E99 TO E107-IN
E100 TO E108-IN

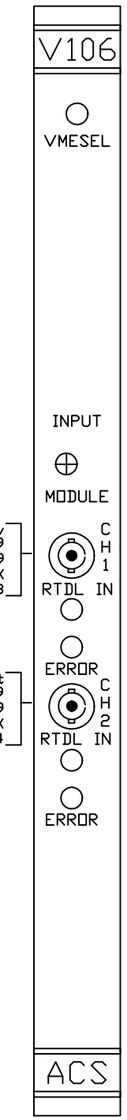

RTDL INPUT MODULE (1-2)

BLDG #: 1004B
RACK #: R4B05
CHASSIS ID: CEX-4B-RTDL1
SLOT #: 7
A16 BASE ADDRESS: 5200

ADDRESS
E44 TO E36-IN
E43 TO E35-OUT
E42 TO E34-IN
E41 TO E33-OUT
E40 TO E32-IN
E39 TO E31-IN
E38 TO E30-OUT
E37 TO E29-IN

PARM ID
E71 TO E79-IN
E72 TO E80-IN
E73 TO E81-IN
E74 TO E82-IN
E75 TO E83-IN
E76 TO E84-OUT
E77 TO E85-IN
E78 TO E86-OUT

rt-yqtv
FROM 1x5 A OUTPUT 3 RACK R4B19
REF SHEET 78
SERIAL LINK CODE 0x9X
RTDL PARM ID 0x05
E65 TO E68-OUT
E66 TO E69-IN
E67 TO E70-OUT

rt-yqiset
FROM 1x2 C OUTPUT 1 RACK R4B19
REF SHEET 79
SERIAL LINK CODE 0x5X
PARM ID 0x06
E87 TO E90-IN
E88 TO E91-IN
E89 TO E92-OUT

PARM ID
E93 TO E101-IN
E94 TO E102-IN
E95 TO E103-IN
E96 TO E104-IN
E97 TO E105-IN
E98 TO E106-OUT
E99 TO E107-OUT
E100 TO E108-IN

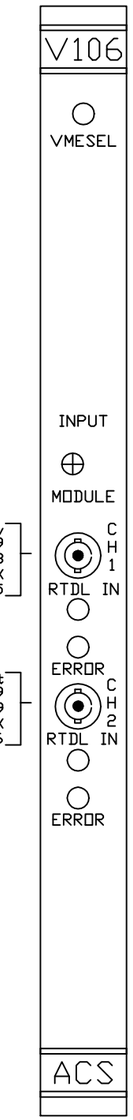

RTDL INPUT MODULE (1-3)

BLDG #: 1004B
RACK #: R4B05
CHASSIS ID: CEX-4B-RTDL1
SLOT #: 8
A16 BASE ADDRESS: 5300

ADDRESS
E44 TO E36-IN
E43 TO E35-OUT
E42 TO E34-IN
E41 TO E33-OUT
E40 TO E32-IN
E39 TO E31-IN
E38 TO E30-OUT
E37 TO E29-OUT

PARM ID
E71 TO E79-IN
E72 TO E80-IN
E73 TO E81-IN
E74 TO E82-IN
E75 TO E83-IN
E76 TO E84-OUT
E77 TO E85-OUT
E78 TO E86-OUT

rt-yqi
FROM 1x5 C OUTPUT 2 RACK R4B19
REF SHEET 79
SERIAL LINK CODE 0x8X
PARM ID 0x07
E65 TO E68-OUT
E66 TO E69-IN
E67 TO E70-IN

rt-yqv
FROM 1x5 C OUTPUT 3 RACK R4B19
REF SHEET X
SERIAL LINK CODE 0x9X
PARM ID 0x08
E87 TO E90-OUT
E88 TO E91-IN
E89 TO E92-OUT

PARM ID
E93 TO E101-IN
E94 TO E102-IN
E95 TO E103-IN
E96 TO E104-IN
E97 TO E105-OUT
E98 TO E106-IN
E99 TO E107-IN
E100 TO E108-IN

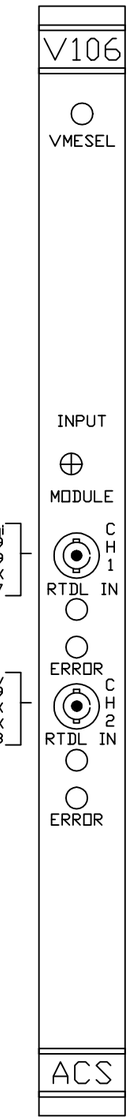

RTDL INPUT MODULE (1-4)

BLDG #: 1004B
RACK #: R4B05
CHASSIS ID: CEX-4B-RTDL1
SLOT #: 9
A16 BASE ADDRESS: 5400

ADDRESS
E44 TO E36-IN
E43 TO E35-OUT
E42 TO E34-IN
E41 TO E33-OUT
E40 TO E32-IN
E39 TO E31-OUT
E38 TO E30-IN
E37 TO E29-IN

PARM ID
E71 TO E79-IN
E72 TO E80-IN
E73 TO E81-IN
E74 TO E82-IN
E75 TO E83-OUT
E76 TO E84-IN
E77 TO E85-IN
E78 TO E86-OUT

rt-yqtiset
FROM 1x2 A OUTPUT 1 RACK R04B19
REF SHEET 78
SERIAL LINK CODE 0x5X
PARM ID 0x09
E65 TO E68-IN
E66 TO E69-IN
E67 TO E70-OUT

rt-yqti
FROM 1x5 A OUTPUT 2 RACK R4B19
REF SHEET 78
SERIAL LINK CODE 0x8X
PARM ID 0x0A
E87 TO E90-OUT
E88 TO E91-IN
E89 TO E92-IN

PARM ID
E93 TO E101-IN
E94 TO E102-IN
E95 TO E103-IN
E96 TO E104-IN
E97 TO E105-OUT
E98 TO E106-IN
E99 TO E107-OUT
E100 TO E108-IN

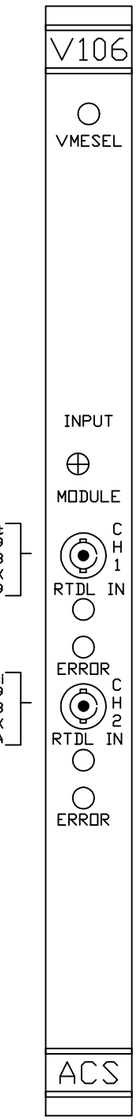

-3	-2	-1	REF DESIGNATOR	ITEM NO.	DESCRIPTION	MAT'L DWG NO./BNL NO.
QTY REQD						

INTERPRET IN GENERAL ACCORDANCE WITH ASME Y14.24M-1989
UNLESS OTHERWISE SPECIFIED DIMENSIONS ARE IN INCHES
DECIMAL TOLERANCES .X ±.030 .XX ±.015 .XXX ±.005
ANGULAR TOLERANCE ± .5°
FINISH NA
BREAK SHARP EDGES MAX. XX MIN. XX
OUTSTANDING ECN

Q.A. CATEGORY A-3
DRAWN BY Ed Koropsak 9/28/98
CHECKED BY
DESIGN APPROVAL
ENGINEER APPROVAL R. MICHNOFF 9/28/98
SUPVR. APPROVAL
NEXT ASSEMBLY

BROOKHAVEN NATIONAL LABORATORY
UPTON, N.Y. 11973
RHIC CONTROLS WIRING DIAGRAM
SERVICE BLDG 1004B
RTDL INPUTS

SIZE D
94028529
DRAWING NUMBER
REV. A
MATERIAL: ——— SCALE: NA WEIGHT: – SHEET 24

C-A, BNL 3/20/01 1:53 PM 8529_24.dwg

*AUTOCAD

REV.	ZONE	ECN NO.	DATE	BY	CKR	APP.

RTDL INPUT MODULE (1-5)

BLDG #: 1004B
RACK #: R4B05
CHASSIS ID: CEX-4B-RTDL1
SLOT #: 10
A16 BASE ADDRESS: 5500

ADDRESS
E44 TO E36-IN
E43 TO E35-OUT
E42 TO E34-IN
E41 TO E33-OUT
E40 TO E32-IN
E39 TO E31-OUT
E38 TO E30-IN
E37 TO E29-OUT

PARM ID
E71 TO E79-IN
E72 TO E80-IN
E73 TO E81-IN
E74 TO E82-IN
E75 TO E83-OUT
E76 TO E84-IN
E77 TO E85-OUT
E78 TO E86-OUT

rt-bdiset
FROM 1x2 B OUTPUT 1 RACK R4B07
REF SHEET 65
SERIAL LINK CODE 0x5X
RTDL PARM ID 0x0B

E65 TO E68-IN
E66 TO E69-IN
E67 TO E70-OUT

rt-bdi
FROM 1x5 B OUTPUT 2 RACK R4B07
REF SHEET 65
SERIAL CODE 0x8X
RTDL PARM ID 0x0C

E87 TO E90-OUT
E88 TO E91-IN
E89 TO E92-IN

PARM ID
E93 TO E101-IN
E94 TO E102-IN
E95 TO E103-IN
E96 TO E104-IN
E97 TO E105-OUT
E98 TO E106-OUT
E99 TO E107-IN
E100 TO E108-IN

V106
VMESEL
INPUT
MODULE
CH 1
RTDL IN
ERROR
CH 2
RTDL IN
ERROR
ACS

RTDL INPUT MODULE (1-6)

BLDG #: 1004B
RACK #: R4B05
CHASSIS ID: CEX-4B-RTDL1
SLOT #: 11
A16 BASE ADDRESS: 5600

ADDRESS
E44 TO E36-IN
E43 TO E35-OUT
E42 TO E34-IN
E41 TO E33-OUT
E40 TO E32-IN
E39 TO E31-OUT
E38 TO E30-OUT
E37 TO E29-IN

PARM ID
E71 TO E79-IN
E72 TO E80-IN
E73 TO E81-IN
E74 TO E82-IN
E75 TO E83-OUT
E76 TO E84-OUT
E77 TO E85-IN
E78 TO E86-OUT

rt-bdv
FROM 1x5 B OUTPUT 3 RACK R4B07
REF SHEET 65
SERIAL LINK CODE 0x9X
RTDL PARM ID 0x0D

E65 TO E68-OUT
E66 TO E69-IN
E67 TO E70-OUT

rt-bdidot
FROM 1x5 B OUTPUT 4 RACK R4B07
REF SHEET 65
SERIAL LINK CODE 0xAX
PARM ID 0x0E

E87 TO E90-OUT
E88 TO E91-OUT
E89 TO E92-IN

PARM ID
E93 TO E101-IN
E94 TO E102-IN
E95 TO E103-IN
E96 TO E104-IN
E97 TO E105-OUT
E98 TO E106-OUT
E99 TO E107-OUT
E100 TO E108-IN

V106
VMESEL
INPUT
MODULE
CH 1
RTDL IN
ERROR
CH 2
RTDL IN
ERROR
ACS

RTDL INPUT MODULE (1-7)

BLDG #: 1004B
RACK #: R4B05
CHASSIS ID: CEX-4B-RTDL1
SLOT #: 12
A16 BASE ADDRESS: 5700

ADDRESS
E44 TO E36-IN
E43 TO E35-OUT
E42 TO E34-IN
E41 TO E33-OUT
E40 TO E32-IN
E39 TO E31-OUT
E38 TO E30-OUT
E37 TO E29-OUT

PARM ID
E71 TO E79-IN
E72 TO E80-IN
E73 TO E81-IN
E74 TO E82-IN
E75 TO E83-OUT
E76 TO E84-OUT
E77 TO E85-OUT
E78 TO E86-OUT

rt-bqtv
FROM 1x5 A OUTPUT 3 RACK R4B07
REF SHEET 64
SERIAL LINK CODE 0x9X
RTDL PARM ID 0x0F

E65 TO E68-OUT
E66 TO E69-IN
E67 TO E70-OUT

rt-bqiset
FROM 1x2 C OUTPUT 1 RACK R4B07
REF SHEET 65
SERIAL LINK CODE 0x5X
PARM ID 0x10

E87 TO E90-IN
E88 TO E91-IN
E89 TO E92-OUT

PARM ID
E93 TO E101-IN
E94 TO E102-IN
E95 TO E103-IN
E96 TO E104-OUT
E97 TO E105-IN
E98 TO E106-IN
E99 TO E107-OUT
E100 TO E108-IN

V106
VMESEL
INPUT
MODULE
CH 1
RTDL IN
ERROR
CH 2
RTDL IN
ERROR
ACS

RTDL INPUT MODULE (1-8)

BLDG #: 1004B
RACK #: R4B05
CHASSIS ID: CEX-4B-RTDL1
SLOT #: 13
A16 BASE ADDRESS: 5800

ADDRESS
E44 TO E36-IN
E43 TO E35-OUT
E42 TO E34-IN
E41 TO E33-OUT
E40 TO E32-OUT
E39 TO E31-IN
E38 TO E30-IN
E37 TO E29-IN

PARM ID
E71 TO E79-IN
E72 TO E80-IN
E73 TO E81-IN
E74 TO E82-OUT
E75 TO E83-IN
E76 TO E84-IN
E77 TO E85-IN
E78 TO E86-OUT

rt-bqi
FROM 1x5 C OUTPUT 2 RACK R4B07
REF SHEET 65
SERIAL LINK CODE 0x8X
PARM ID 0x11

E65 TO E68-OUT
E66 TO E69-IN
E67 TO E70-IN

rt-bqv
FROM 1x5 C OUTPUT 3 RACK R4B07
REF SHEET 65
SERIAL LINK CODE 0x9X
PARM ID 0x12

E87 TO E90-OUT
E88 TO E91-IN
E89 TO E92-OUT

PARM ID
E93 TO E101-IN
E94 TO E102-IN
E95 TO E103-IN
E96 TO E104-OUT
E97 TO E105-IN
E98 TO E106-IN
E99 TO E107-OUT
E100 TO E108-IN

V106
VMESEL
INPUT
MODULE
CH 1
RTDL IN
ERROR
CH 2
RTDL IN
ERROR
ACS

RTDL INPUT MODULE (1-9)

BLDG #: 1004B
RACK #: R4B05
CHASSIS ID: CEX-4B-RTDL1
SLOT #: 14
A16 BASE ADDRESS: 5900

ADDRESS
E44 TO E36-IN
E43 TO E35-OUT
E42 TO E34-IN
E41 TO E33-OUT
E40 TO E32-OUT
E39 TO E31-IN
E38 TO E30-IN
E37 TO E29-OUT

PARM ID
E71 TO E79-IN
E72 TO E80-IN
E73 TO E81-IN
E74 TO E82-OUT
E75 TO E83-IN
E76 TO E84-IN
E77 TO E85-OUT
E78 TO E86-OUT

rt-bqtiset
FROM 1x2 A OUTPUT 1 RACK R04B07
REF SHEET 64
SERIAL LINK CODE 0x5X
PARM ID 0x13

E65 TO E68-IN
E66 TO E69-IN
E67 TO E70-OUT

rt-bqti
FROM 1x5 AOUTPUT 2 RACK R4B07
REF SHEET 64
SERIAL LINK CODE 0x8X
PARM ID 0x14

E87 TO E90-OUT
E88 TO E91-IN
E89 TO E92-IN

PARM ID
E93 TO E101-IN
E94 TO E102-IN
E95 TO E103-IN
E96 TO E104-OUT
E97 TO E105-IN
E98 TO E106-OUT
E99 TO E107-IN
E100 TO E108-IN

V106
VMESEL
INPUT
MODULE
CH 1
RTDL IN
ERROR
CH 2
RTDL IN
ERROR
ACS

-3	-2	-1	REF DESIGNATOR	ITEM NO.	DESCRIPTION	MAT'L DWG NO.,BNL NO.
QTY REQD						

INTERPRET IN GENERAL ACCORDANCE WITH ASME Y14.24M-1989
UNLESS OTHERWISE SPECIFIED DIMENSIONS ARE IN INCHES
DECIMAL TOLERANCES .X ±.030 .XX ±.015 .XXX ±.005
ANGULAR TOLERANCE ± .5°
OUTSTANDING ECN
NA FINISH
BREAK SHARP EDGES MAX. XX MIN. XX

Q.A. CATEGORY A-3
DRAWN BY Ed Koropsak 9/30/98
CHECKED BY
DESIGN APPROVAL
ENGINEER APPROVAL R. MICHNOFF 9/30/98
SUPVR. APPROVAL
NEXT ASSEMBLY

BROOKHAVEN NATIONAL LABORATORY
UPTON, N.Y. 11973
RHIC CONTROLS WIRING DIAGRAM
SERVICE BLDG 1004B
RTDL INPUTS
SIZE D
94028529
DRAWING NUMBER
REV. A
MATERIAL: ——— SCALE: NA WEIGHT: – SHEET 25

C-A, BNL 3/20/01 1:55 PM 8529_25.dwg

*AUTOCAD

REV.	ZONE	ECN NO.	DATE	BY	CKR	APP.

RTDL INPUT MODULE (1-A)

BLDG #: 1004B
RACK #: R4B05
CHASSIS ID: CEX-4B-RTDL1
SLOT #: 15
A16 BASE ADDRESS: 5A00

ADDRESS
E44 TO E36-IN
E43 TO E35-OUT
E42 TO E34-IN
E41 TO E33-OUT
E40 TO E32-OUT
E39 TO E31-IN
E38 TO E30-OUT
E37 TO E29-IN

PARM ID
E71 TO E79-IN
E72 TO E80-IN
E73 TO E81-IN
E74 TO E82-OUT
E75 TO E83-IN
E76 TO E84-OUT
E77 TO E85-IN
E78 TO E86-OUT

rt-bbdot
FROM wfg:4b-ps3.I0
REF SHEET 107
SERIAL LINK CODE 5x
RTDL PARM ID 0x15

E65 TO E68-IN
E66 TO E69-IN
E67 TO E70-OUT

rt-ybdot
FROM wfg:4b-ps3.I1
REF SHEET 107
SERIAL LINK CODE 5x
RTDL PARM ID 0x16

E87 TO E90-IN
E88 TO E91-IN
E89 TO E92-OUT

PARM ID
E93 TO E101-IN
E94 TO E102-IN
E95 TO E103-IN
E96 TO E104-OUT
E97 TO E105-IN
E98 TO E106-OUT
E99 TO E107-OUT
E100 TO E108-IN

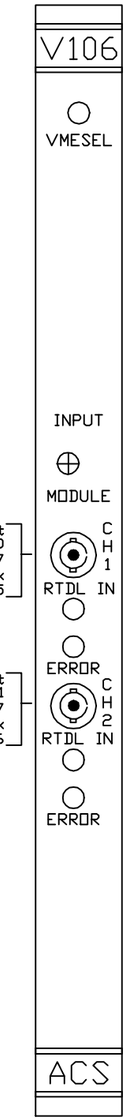

RTDL INPUT MODULE (1-B)

BLDG #: 1004B
RACK #: R4B05
CHASSIS ID: CEX-4B-RTDL1
SLOT #: 16
A16 BASE ADDRESS: 5C00

ADDRESS
E44 TO E36-IN
E43 TO E35-OUT
E42 TO E34-IN
E41 TO E33-OUT
E40 TO E32-OUT
E39 TO E31-OUT
E38 TO E30-IN
E37 TO E29-IN

PARM ID
E71 TO E79-IN
E72 TO E80-IN
E73 TO E81-IN
E74 TO E82-OUT
E75 TO E83-IN
E76 TO E84-OUT
E77 TO E85-OUT
E78 TO E86-OUT

rt-yrigidity-ddot
FROM wfg:4b-ps3.N0
REF SHEET 109
SERIAL LINK CODE 5x
RTDL PARM ID 0x17

E65 TO E68-IN
E66 TO E69-IN
E67 TO E70-OUT

rt-brigidity-ddot
FROM wfg:4b-ps3.N1
REF SHEET 109
SERIAL LINK CODE 5x
RTDL PARM ID 0x18

E87 TO E90-IN
E88 TO E91-IN
E89 TO E92-OUT

PARM ID
E93 TO E101-IN
E94 TO E102-IN
E95 TO E103-IN
E96 TO E104-OUT
E97 TO E105-OUT
E98 TO E106-IN
E99 TO E107-IN
E100 TO E108-IN

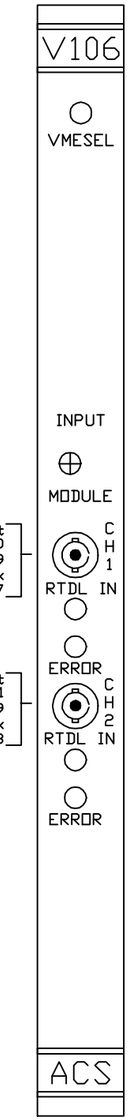

RTDL INPUT MODULE (1-C)

BLDG #: 1004B
RACK #: R4B05
CHASSIS ID: CEX-4B-RTDL1
SLOT #: 17
A16 BASE ADDRESS: 5B00

ADDRESS
E44 TO E36-IN
E43 TO E35-OUT
E42 TO E34-IN
E41 TO E33-OUT
E40 TO E32-OUT
E39 TO E31-IN
E38 TO E30-OUT
E37 TO E29-OUT

NAME XX
FROM x
REF SHEET x
SERIAL LINK CODE 0x
RTDL PARM ID 0x

E65 TO E68-?
E66 TO E69-?
E67 TO E70-?

NAME XX
FROM x
REF SHEET x
SERIAL LINK CODE 0x
RTDL PARM ID 0x

E87 TO E90-?
E88 TO E91-?
E89 TO E92-?

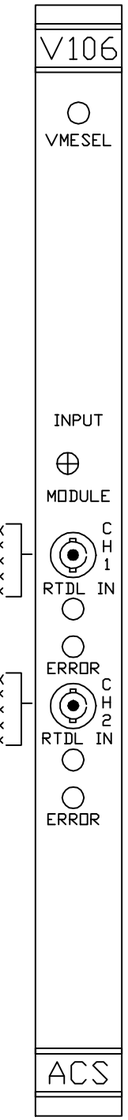

THIS BOARD IS
NOT INSTALLED.

-3	-2	-1	REF DESIGNATOR	ITEM NO.	DESCRIPTION	MAT'L DWG NO.,BNL NO.
QTY REQD						

INTERPRET IN GENERAL ACCORDANCE WITH ASME Y14.24M-1989
UNLESS OTHERWISE SPECIFIED DIMENSIONS ARE IN INCHES
DECIMAL TOLERANCES .X ±.030 .XX ±.015 .XXX ±.005
ANGULAR TOLERANCE ± .5°
OUTSTANDING ECN
NA FINISH
BREAK SHARP EDGES MAX. XX MIN. XX

Q.A. CATEGORY A-3		DATE	BROOKHAVEN NATIONAL LABORATORY
DRAWN BY	Ed Koropsak	9/30/98	UPTON, N.Y. 11973
CHECKED BY			RHIC CONTROLS WIRING DIAGRAM
DESIGN APPROVAL			SERVICE BLDG 1004B
ENGINEER APPROVAL	R. MICHNOFF	9/30/98	RTDL INPUTS
SUPVR. APPROVAL			
NEXT ASSEMBLY			SIZE D — 94028529 — REV. A
			DRAWING NUMBER
			MATERIAL: ——— SCALE: NA WEIGHT: – SHEET 26

BNL, BNL 8/17/00 1:42 PM 8529_26.dwg

*AUTOCAD

REV.	ZONE	ECN NO.	DATE	BY	CKR	APP.

RTDL INPUT MODULE (1-D)

BLDG #: 1004B
RACK #: R4B05
CHASSIS ID: CEX-4B-RTDL1
SLOT #: 18
A16 BASE ADDRESS: 5D00

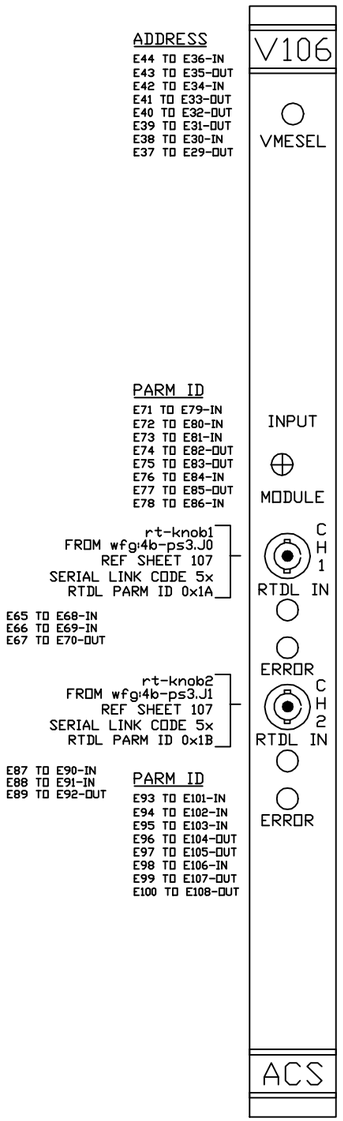

RTDL INPUT MODULE (1-E)

BLDG #: 1004B
RACK #: R4B05
CHASSIS ID: CEX-4B-RTDL1
SLOT #: 19
A16 BASE ADDRESS: 5E00

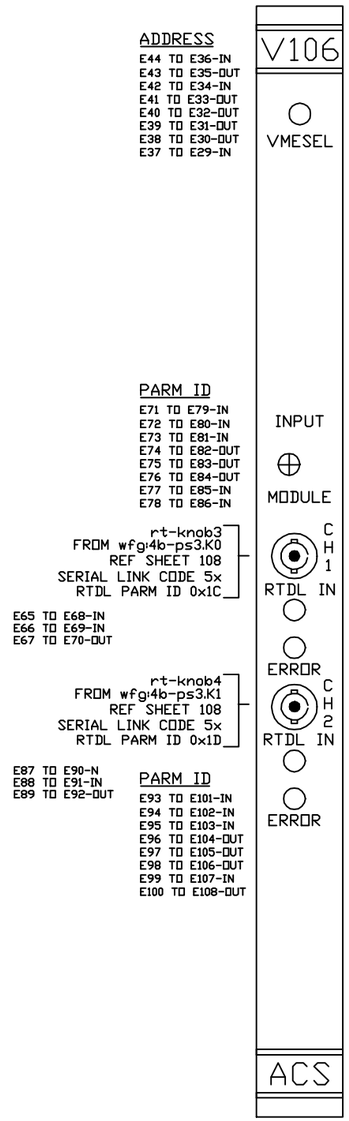

RTDL INPUT MODULE (1-F)

BLDG #: 1004B
RACK #: R4B05
CHASSIS ID: CEX-4B-RTDL1
SLOT #: 20
A16 BASE ADDRESS: 5F00

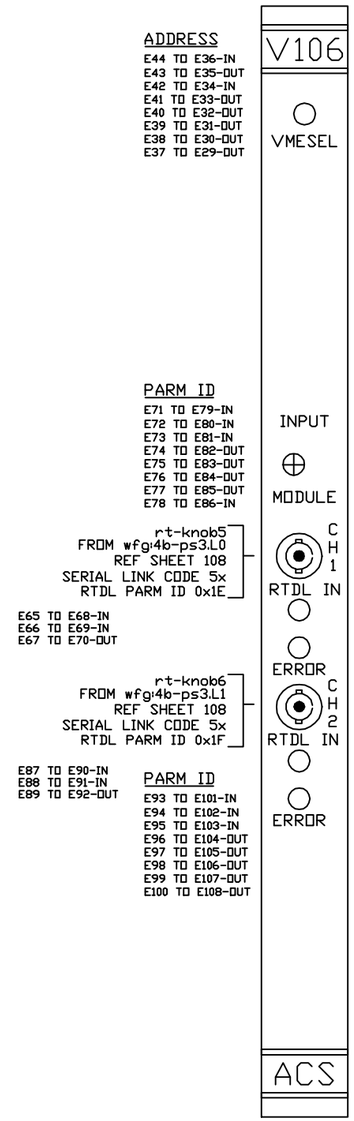

-3	-2	-1	REF DESIGNATOR	ITEM NO.	DESCRIPTION	MAT'L. DWG NO.,BNL NO.
QTY REQD						

INTERPRET IN GENERAL ACCORDANCE WITH ASME Y14.24M-1989
UNLESS OTHERWISE SPECIFIED DIMENSIONS ARE IN INCHES
DECIMAL TOLERANCES .X ±.030 .XX ±.015 .XXX ±.005
ANGULAR TOLERANCE ± .5°
OUTSTANDING ECN
NA FINISH
BREAK SHARP EDGES MAX. XX MIN. XX

Q.A. CATEGORY A-3		DATE	BROOKHAVEN NATIONAL LABORATORY
DRAWN BY	Ed Koropsak	9/30/98	UPTON, N.Y. 11973
CHECKED BY			RHIC CONTROLS WIRING DIAGRAM
DESIGN APPROVAL			SERVICE BLDG 1004B
ENGINEER APPROVAL	R. MICHNOFF	9/30/98	RTDL INPUTS
SUPVR. APPROVAL			
NEXT ASSEMBLY			SIZE D — 94028529 — REV. A
			DRAWING NUMBER
			MATERIAL: ——— SCALE: NA WEIGHT: – SHEET 27 OF XX

ACS, BNL 1/28/00 2:13 PM 8529_27.dwg

*AUTOCAD

REV.	ZONE	ECN NO.	DATE	BY	CKR	APP.

Phil Pape, Controls Division 10/25/2002 9:33 AM 8529_28.dwg

RTDL INPUT MODULE (2-0)

BLDG #: 1004B
RACK #: R4B05
CHASSIS ID: CEX-4B-RTDL2
SLOT #: 5
A16 BASE ADDRESS: 7000

V206

VMESEL
OFFLINE

CH1
- rt-yrad-steer
  - FROM WFG:4B-PS3.A0
  - REF SHEET x
  - SERIAL LINK CODE 0x55
  - RTDL PARM ID 0x40
- rt-y_Rdot-steer
  - FROM WFG:4B-PS3.A1
  - REF SHEET x
  - SERIAL LINK CODE 0x55
  - RTDL PARM ID 0x41

CH2
- rt-y_cog_phase
  - FROM WFG:4B-PS3.C0
  - REF SHEET x
  - SERIAL LINK CODE 0x55
  - RTDL PARM ID 0x42

CH3
- rt-ynextbucket
  - SOFTWARE
  - N/A
  - SERIAL LINK CODE N/A
  - RTDL PARM ID 0x43

CH4

INPUT MODULE

CH5
- rt-yrigidity
  - FROM WFG:4B-PS3.D0
  - REF SHEET x
  - SERIAL LINK CODE 0x55
  - RTDL PARM ID 0x44

CH6
- rt-brad-steer
  - FROM WFG:4B-PS3.B0
  - REF SHEET x
  - SERIAL LINK CODE 0x55
  - RTDL PARM ID 0x45

CH7
- rt-b_Rdot-steer
  - FROM WFG:4B-PS3.B1
  - REF SHEET x
  - SERIAL LINK CODE 0x55
  - RTDL PARM ID 0x46

CH8
- rt-b_cog_phase
  - FROM WFG:4B-PS3.C1
  - REF SHEET x
  - SERIAL LINK CODE 0x55
  - RTDL PARM ID 0x47

ACD

RTDL INPUT MODULE (2-1)

BLDG #: 1004B
RACK #: R4B05
CHASSIS ID: CEX-4B-RTDL2
SLOT #: 6
A16 BASE ADDRESS: 7200

V206

VMESEL
OFFLINE

CH1
- rt-bnextbucket
  - SOFTWARE
  - N/A
  - SERIAL LINK CODE N/A
  - RTDL PARM ID 0x48

CH2
- rt-brigidity
  - FROM WFG:4B-PS3.D1
  - REF SHEET x
  - SERIAL LINK CODE 0x55
  - RTDL PARM ID 0x49

CH3
- rt-rfyradius jump
  - FROM WFG:4B-PS3.M0
  - REF SHEET x
  - SERIAL LINK CODE 0x55
  - RTDL PARM ID 0x4A
- rt-rfbradius jump
  - FROM WFG:4B-PS3.M1
  - REF SHEET x
  - SERIAL LINK CODE 0x55
  - RTDL PARM ID 0x4B

CH4

INPUT MODULE

CH5
- rt-rfknob3
  - SOFTWARE
  - N/A
  - SERIAL LINK CODE N/A
  - RTDL PARM ID 0x4C

CH6
- rt-rfknob
  - SOFTWARE
  - N/A
  - SERIAL LINK CODE N/A
  - RTDL PARM ID 0x4D

CH7
- rt-bdelta-frev
  - SERIAL LINK CODE 0xXX
  - RTDL PARM ID 0x4E

CH8
- rt-ydelta-frev
  - SERIAL LINK CODE 0xXX
  - RTDL PARM ID 0x4F

ACD

RTDL INPUT MODULE (2-2)

BLDG #: 1004B
RACK #: R4B05
CHASSIS ID: CEX-4B-RTDL2
SLOT #: 7
A16 BASE ADDRESS: 7400

V206

VMESEL
OFFLINE

CH1
- rt-b_lramp_test
  - FROM WFG:4B-PS3.F0
  - REF SHEET x
  - SERIAL LINK CODE 0x55
  - RTDL PARM ID 0x50

CH2
- rt-b_ldot_test
  - FROM WFG:4B-PS3.F1
  - REF SHEET x
  - SERIAL LINK CODE 0x55
  - RTDL PARM ID 0x51

CH3
- rt-y_lramp_test
  - FROM WFG:4B-PS3.G0
  - REF SHEET x
  - SERIAL LINK CODE 0x55
  - RTDL PARM ID 0x52

CH4
- rt-y_ldot_test
  - FROM WFG:4B-PS3.G1
  - REF SHEET x
  - SERIAL LINK CODE 0x55
  - RTDL PARM ID 0x53

INPUT MODULE

CH5
- NAME
  - FROM X
  - REF SHEET x
  - SERIAL LINK CODE 0x
  - RTDL PARM ID 0x

CH6
- NAME
  - FROM X
  - REF SHEET x
  - SERIAL LINK CODE 0x
  - RTDL PARM ID 0x

CH7
- rt-yqf
  - SOFTWARE
  - N/A
  - SERIAL LINK CODE N/A
  - RTDL PARM ID 0x56

CH8
- rt-yqd
  - SOFTWARE
  - N/A
  - SERIAL LINK CODE N/A
  - RTDL PARM ID 0x57

ACD

RTDL INPUT MODULE (2-3)

BLDG #: 1004B
RACK #: R4B05
CHASSIS ID: CEX-4B-RTDL2
SLOT #: 8
A16 BASE ADDRESS: 7600

V206

VMESEL
OFFLINE

CH1
- rt-bqf
  - SOFTWARE
  - N/A
  - SERIAL LINK CODE N/A
  - RTDL PARM ID 0x58

CH2
- rt-bqd
  - SOFTWARE
  - N/A
  - SERIAL LINK CODE N/A
  - RTDL PARM ID 0x59

CH3
- rt-brampvar
  - FROM WFG:4B-PS3.E0
  - REF SHEET x
  - SERIAL LINK CODE 0x55
  - RTDL PARM ID 0x5A

CH4
- rt-yrampvar
  - FROM WFG:4B-PS3.E1
  - REF SHEET x
  - SERIAL LINK CODE 0x55
  - RTDL PARM ID 0x5B

INPUT MODULE

CH5
- rt-wfgtest1
  - FROM WFG:4B-PS3.H0
  - REF SHEET x
  - SERIAL LINK CODE 0x55
  - RTDL PARM ID 0x5C

CH6
- rt-wfgtest2
  - FROM WFG:4B-PS3.H1
  - REF SHEET x
  - SERIAL LINK CODE 0x55
  - RTDL PARM ID 0x5D

CH7
- rt-agscycle
  - SERIAL LINK CODE 0xXX
  - RTDL PARM ID 0x5E

CH8
- rt-fillno
  - SOFTWARE
  - N/A
  - SERIAL LINK CODE N/A
  - RTDL PARM ID 0x5F

ACD

RTDL INPUT MODULE (2-4)

BLDG #: 1004B
RACK #: R4B05
CHASSIS ID: CEX-4B-RTDL2
SLOT #: 9
A16 BASE ADDRESS: 7800

V206

VMESEL
OFFLINE

CH1
- NAME XX
  - FROM x
  - REF SHEET x
  - SERIAL LINK CODE 0x
  - RTDL PARM ID 0x
- NAME XX
  - FROM x
  - REF SHEET x
  - SERIAL LINK CODE 0x
  - RTDL PARM ID 0x

CH2
- NAME XX
  - FROM x
  - REF SHEET x
  - SERIAL LINK CODE 0x
  - RTDL PARM ID 0x
- NAME XX
  - FROM x
  - REF SHEET x
  - SERIAL LINK CODE 0x
  - RTDL PARM ID 0x

CH3
- NAME XX
  - FROM x
  - REF SHEET x
  - SERIAL LINK CODE 0x
  - RTDL PARM ID 0x

CH4

INPUT MODULE

CH5
- NAME XX
  - FROM x
  - REF SHEET x
  - SERIAL LINK CODE 0x
  - RTDL PARM ID 0x

CH6
- NAME XX
  - FROM x
  - REF SHEET x
  - SERIAL LINK CODE 0x
  - RTDL PARM ID 0x

CH7
- NAME XX
  - FROM x
  - REF SHEET x
  - SERIAL LINK CODE 0x
  - RTDL PARM ID 0x

CH8
- NAME XX
  - FROM x
  - REF SHEET x
  - SERIAL LINK CODE 0x
  - RTDL PARM ID 0x

ACD

-3	-2	-1	REF DESIGNATOR	ITEM NO.	DESCRIPTION	MAT'L DWG NO./BNL NO.
QTY REQD						

INTERPRET IN GENERAL ACCORDANCE WITH ASME Y14.24M-1989

UNLESS OTHERWISE SPECIFIED DIMENSIONS ARE IN INCHES

DECIMAL TOLERANCES
.X ±.030
.XX ±.015
.XXX ±.005
ANGULAR TOLERANCE ± .5°

OUTSTANDING ECN

NA FINISH

BREAK SHARP EDGES MAX. XX MIN. XX

Q.A. CATEGORY A-3

DATE 10/25/2002

DRAWN BY PAPE

CHECKED BY

DESIGN APPROVAL

ENGINEER APPROVAL

SUPVR. APPROVAL

NEXT ASSEMBLY

BROOKHAVEN NATIONAL LABORATORY
UPTON, N.Y. 11973

RHIC CONTROLS WIRING DIAGRAM

SERVICE BLDG. 1004B

RTDL INPUTS

SIZE D

DRAWING NUMBER 94028529

REV. A

MATERIAL: ——— SCALE: FULL WEIGHT: – SHEET 28 OF XX

*AUTOCAD

REV.	ZONE	ECN NO.	DATE	BY	CKR	APP.

Phil Pape, Controls Division 9/13/2002 2:14 PM 8529_29.dwg

RTDL INPUT MODULE (2-5)

BLDG #: 1004B
RACK #: R4B05
CHASSIS ID: CEX-4B-RTDL2
SLOT #: 10
A16 BASE ADDRESS: 7A00

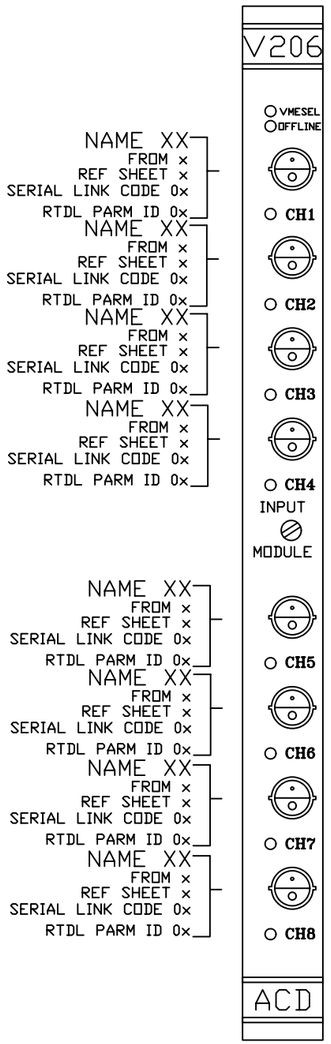

RTDL INPUT MODULE (2-6)

BLDG #: 1004B
RACK #: R4B05
CHASSIS ID: CEX-4B-RTDL2
SLOT #: 11
A16 BASE ADDRESS: 7C00

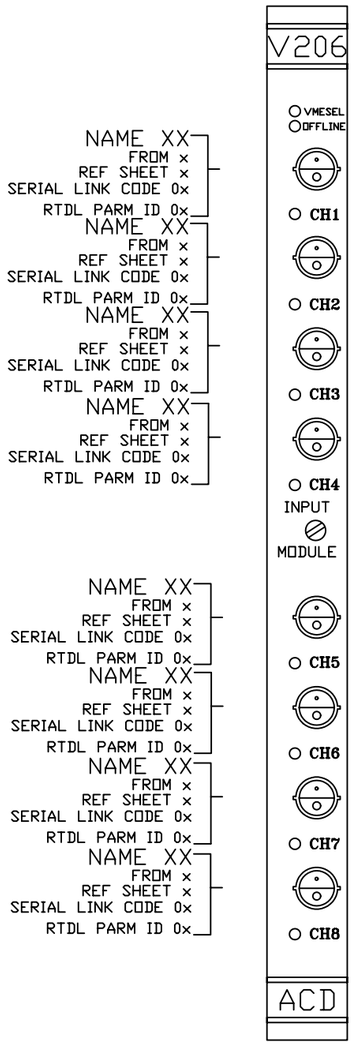

RTDL INPUT MODULE (2-7)

BLDG #: 1004B
RACK #: R4B05
CHASSIS ID: CEX-4B-RTDL2
SLOT #: 12
A16 BASE ADDRESS: 7E00

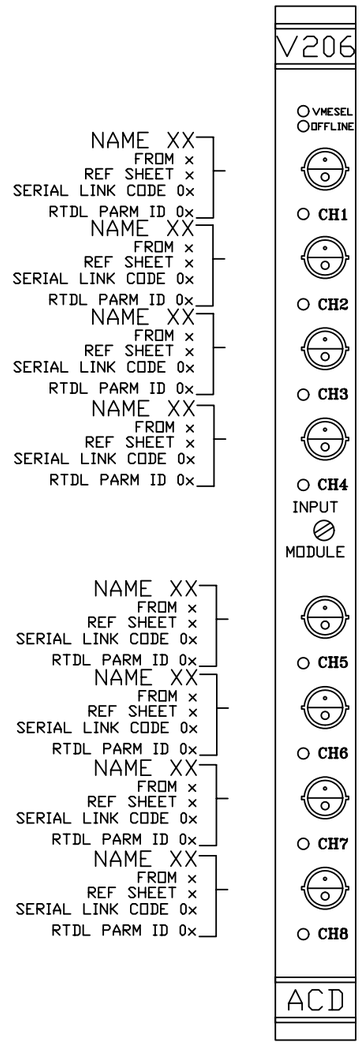

RTDL INPUT MODULE (2-8)

BLDG #: 1004B
RACK #: R4B05
CHASSIS ID: CEX-4B-RTDL2
SLOT #: 13
A16 BASE ADDRESS: 8000

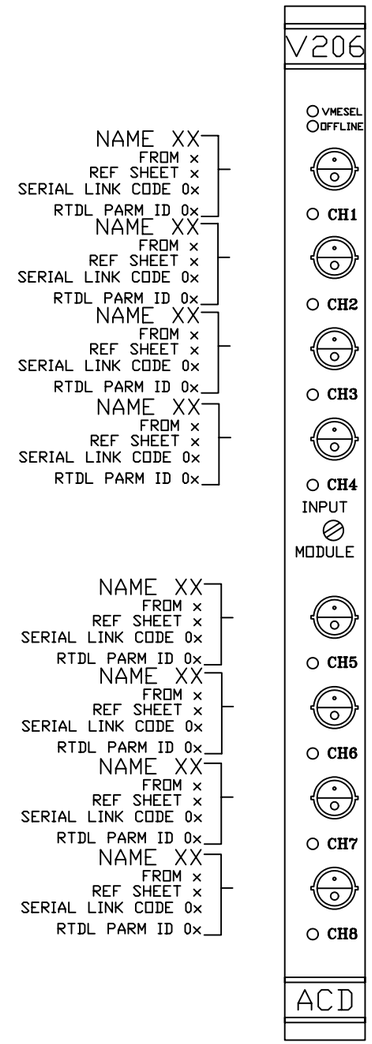

RTDL INPUT MODULE (2-9)

BLDG #: 1004B
RACK #: R4B05
CHASSIS ID: CEX-4B-RTDL2
SLOT #: 14
A16 BASE ADDRESS: 8200

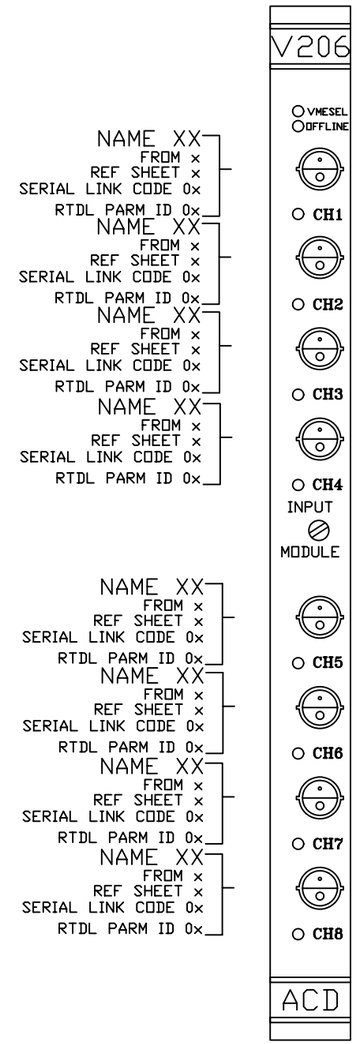

-3	-2	-1	REF DESIGNATOR	ITEM NO.	DESCRIPTION	MAT'L DWG NO.,BML NO.
QTY REQD						

INTERPRET IN GENERAL ACCORDANCE WITH ASME Y14.24M-1989

UNLESS OTHERWISE SPECIFIED DIMENSIONS ARE IN INCHES

DECIMAL TOLERANCES
.X ±.030
.XX ±.015
.XXX ±.005
ANGULAR TOLERANCE
± .5°

NA FINISH

BREAK SHARP EDGES
MAX. XX MIN. XX

OUTSTANDING ECN

Q.A. CATEGORY A-3

		DATE
DRAWN BY	PAPE	09/11/2002
CHECKED BY		
DESIGN APPROVAL		
ENGINEER APPROVAL	H. HARTMANN	
SUPVR. APPROVAL		

NEXT ASSEMBLY

BROOKHAVEN NATIONAL LABORATORY
UPTON, N.Y. 11973

RHIC CONTROLS WIRING DIAGRAM
SERVICE BLDG. 1004B
RTDL INPUTS

SIZE D
DRAWING NUMBER 94028529
REV. A

MATERIAL: ——— SCALE: FULL WEIGHT: – SHEET 29 OF XX

*AUTOCAD

REV.	ZONE	ECN NO.	DATE	BY	CKR	APP.

Phil Pape, Controls Division 9/13/2002 2:22 PM 8529_29_1.dwg

RTDL INPUT MODULE (2-A)

BLDG #: 1004B
RACK #: R4B05
CHASSIS ID: CEX-4B-RTDL2
SLOT #: 15
A16 BASE ADDRESS: 8400

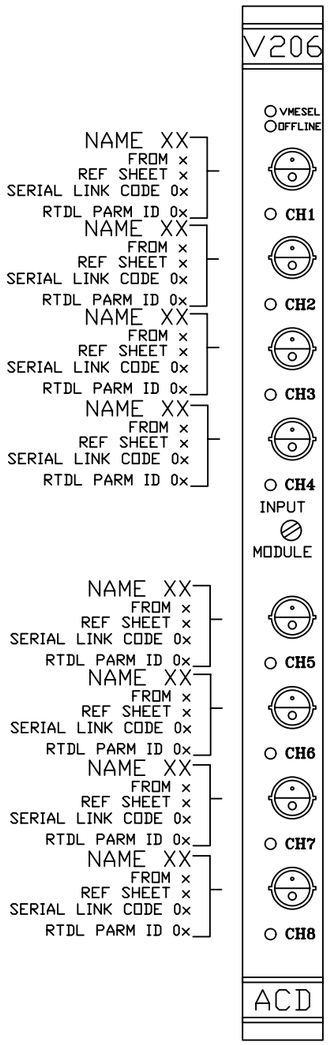

RTDL INPUT MODULE (2-B)

BLDG #: 1004B
RACK #: R4B05
CHASSIS ID: CEX-4B-RTDL2
SLOT #: 16
A16 BASE ADDRESS: 8600

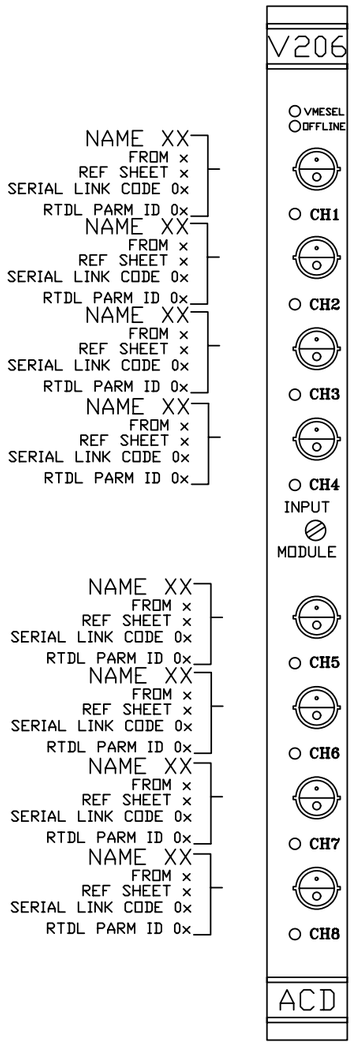

RTDL INPUT MODULE (2-C)

BLDG #: 1004B
RACK #: R4B05
CHASSIS ID: CEX-4B-RTDL2
SLOT #: 17
A16 BASE ADDRESS: 8800

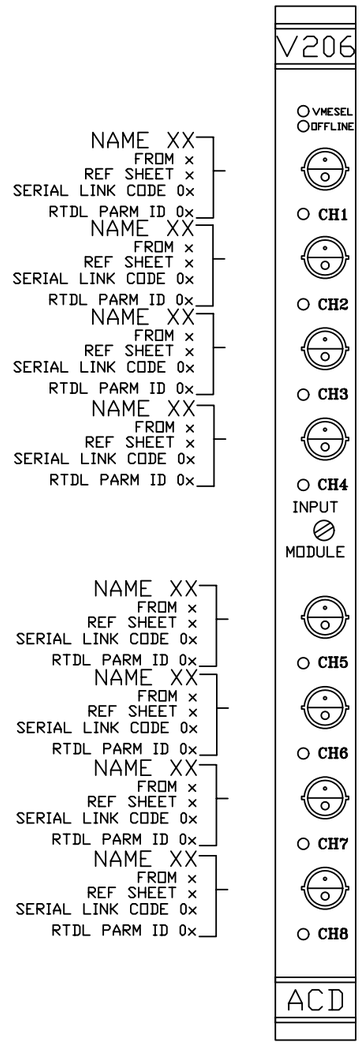

RTDL INPUT MODULE (2-D)

BLDG #: 1004B
RACK #: R4B05
CHASSIS ID: CEX-4B-RTDL2
SLOT #: 18
A16 BASE ADDRESS: 8A00

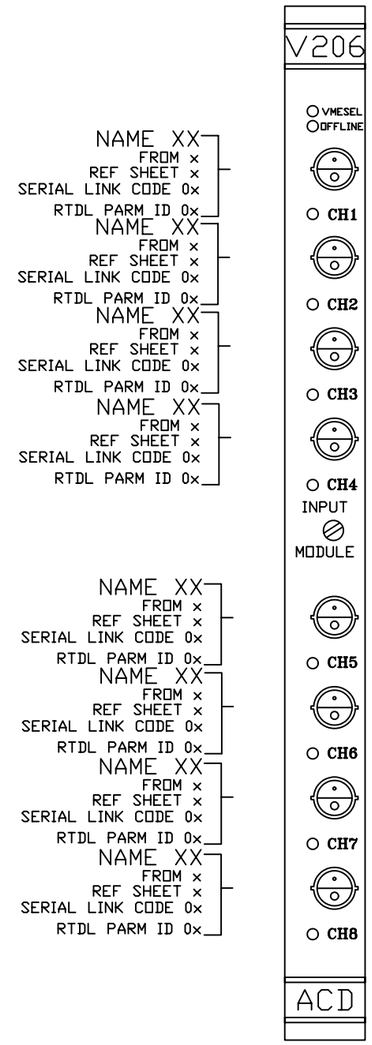

RTDL INPUT MODULE (2-E)

BLDG #: 1004B
RACK #: R4B05
CHASSIS ID: CEX-4B-RTDL2
SLOT #: 19
A16 BASE ADDRESS: 8C00

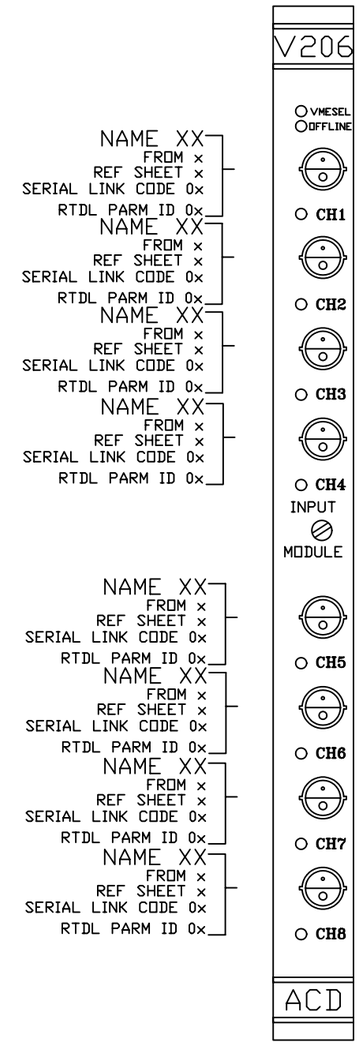

-3	-2	-1	REF DESIGNATOR	ITEM NO.	DESCRIPTION	MAT'L DWG NO.,BML NO.
QTY REQD						

INTERPRET IN GENERAL ACCORDANCE WITH ASME Y14.24M-1989

UNLESS OTHERWISE SPECIFIED DIMENSIONS ARE IN INCHES

DECIMAL TOLERANCES
.X ±.030
.XX ±.015
.XXX ±.005
ANGULAR TOLERANCE
± .5°

OUTSTANDING ECN

NA FINISH

BREAK SHARP EDGES
MAX. XX MIN. XX

Q.A. CATEGORY A-3

		DATE
DRAWN BY	PAPE	09/11/2002
CHECKED BY		
DESIGN APPROVAL		
ENGINEER APPROVAL	H. HARTMANN	
SUPVR. APPROVAL		

NEXT ASSEMBLY

BROOKHAVEN NATIONAL LABORATORY
UPTON, N.Y. 11973

RHIC CONTROLS WIRING DIAGRAM
SERVICE BLDG. 1004B
RTDL INPUTS

SIZE D
DRAWING NUMBER 94028529
REV. A

MATERIAL: ——— SCALE: FULL WEIGHT: – SHEET 30 OF XX

*AUTOCAD

REV.	ZONE	ECN NO.	DATE	BY	CKR	APP.

Phil Pape, Controls Division 9/13/2002 2:24 PM 8529_29_2.dwg

RTDL INPUT MODULE (2-F)

BLDG #: 1004B
RACK #: R4B05
CHASSIS ID: CEX-4B-RTDL2
SLOT #: 20
A16 BASE ADDRESS: 8E00

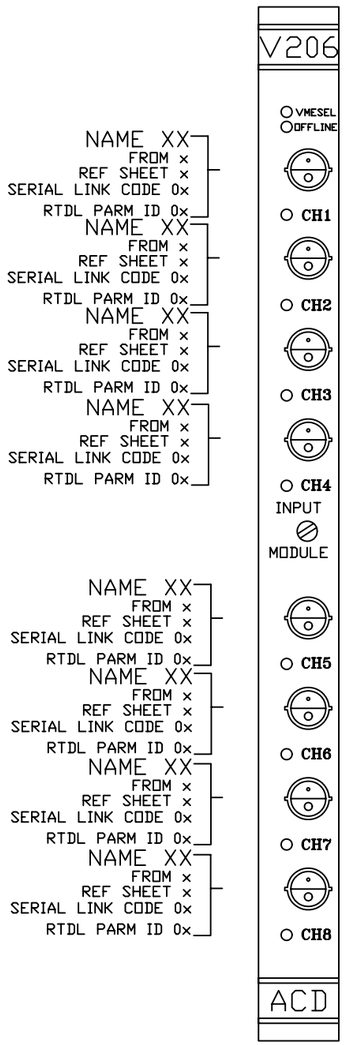

-3	-2	-1	REF DESIGNATOR	ITEM NO.	DESCRIPTION	MAT'L DWG NO.,BML NO.
QTY REQD						

INTERPRET IN GENERAL ACCORDANCE WITH ASME Y14.24M-1989

UNLESS OTHERWISE SPECIFIED DIMENSIONS ARE IN INCHES

DECIMAL TOLERANCES
.X ±.030
.XX ±.015
.XXX ±.005
ANGULAR TOLERANCE
± .5°

OUTSTANDING ECN

NA FINISH

BREAK SHARP EDGES
MAX. XX MIN. XX

Q.A. CATEGORY	A-3	DATE
DRAWN BY	PAPE	09/11/2002
CHECKED BY		
DESIGN APPROVAL		
ENGINEER APPROVAL	H. HARTMANN	
SUPVR. APPROVAL		

NEXT ASSEMBLY

BROOKHAVEN NATIONAL LABORATORY
UPTON, N.Y. 11973

RHIC CONTROLS WIRING DIAGRAM

SERVICE BLDG 1004B

RTDL INPUTS

SIZE D

Drawing Number

DRAWING NUMBER

REV. A

MATERIAL: ——— SCALE: FULL WEIGHT: – SHEET 31 OF XX

*AUTOCAD

REV.	ZONE	ECN NO.	DATE	BY	CKR	APP.

RTDL INPUT MODULE (2B)

BLDG #: 1004B
RACK #: R4B05
CHASSIS ID: CEX-4B-RTDL2
SLOT #: 16
A16 BASE ADDRESS: 7B00

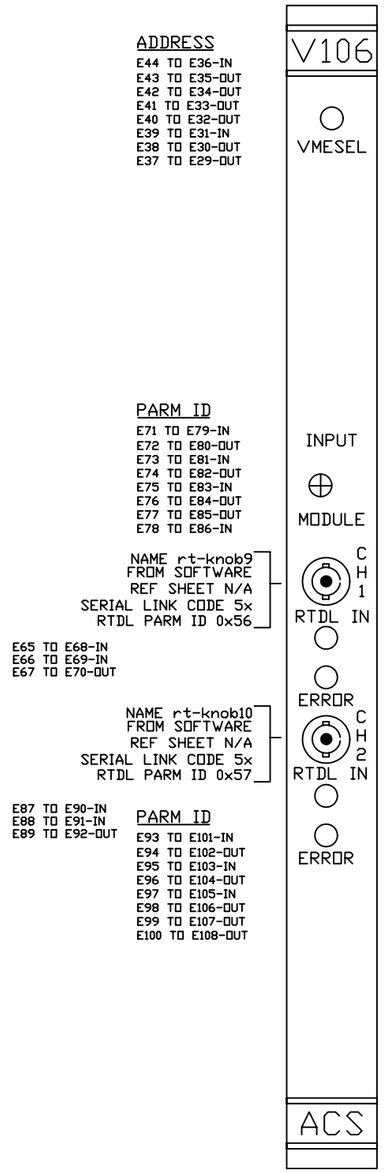

ADDRESS
E44 TO E36-IN
E43 TO E35-OUT
E42 TO E34-OUT
E41 TO E33-OUT
E40 TO E32-OUT
E39 TO E31-IN
E38 TO E30-OUT
E37 TO E29-OUT

PARM ID
E71 TO E79-IN
E72 TO E80-OUT
E73 TO E81-IN
E74 TO E82-OUT
E75 TO E83-IN
E76 TO E84-OUT
E77 TO E85-OUT
E78 TO E86-IN

NAME rt-knob9
FROM SOFTWARE
REF SHEET N/A
SERIAL LINK CODE 5x
RTDL PARM ID 0x56

E65 TO E68-IN
E66 TO E69-IN
E67 TO E70-OUT

NAME rt-knob10
FROM SOFTWARE
REF SHEET N/A
SERIAL LINK CODE 5x
RTDL PARM ID 0x57

E87 TO E90-IN
E88 TO E91-IN
E89 TO E92-OUT

PARM ID
E93 TO E101-IN
E94 TO E102-OUT
E95 TO E103-IN
E96 TO E104-OUT
E97 TO E105-IN
E98 TO E106-OUT
E99 TO E107-OUT
E100 TO E108-OUT

RTDL INPUT MODULE (2-C)

BLDG #: 1004B
RACK #: R4B05
CHASSIS ID: CEX-4B-RTDL2
SLOT #: 17
A16 BASE ADDRESS: 7C00

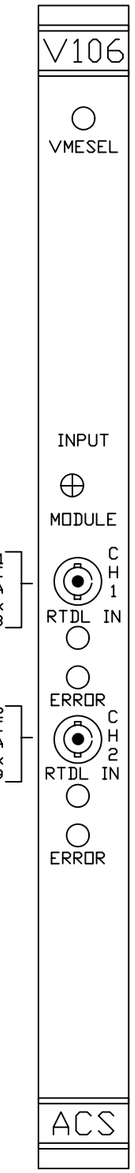

ADDRESS
E44 TO E36-IN
E43 TO E35-OUT
E42 TO E34-OUT
E41 TO E33-OUT
E40 TO E32-OUT
E39 TO E31-OUT
E38 TO E30-IN
E37 TO E29-IN

PARM ID
E71 TO E79-IN
E72 TO E80-OUT
E73 TO E81-IN
E74 TO E82-OUT
E75 TO E83-OUT
E76 TO E84-IN
E77 TO E85-IN
E78 TO E86-IN

NAME rt-knob11
FROM SOFTWARE
REF SHEET N/A
SERIAL LINK CODE 5x
RTDL PARM ID 0x58

E65 TO E68-IN
E66 TO E69-IN
E67 TO E70-OUT

NAME rt-knob12
FROM SOFTWARE
REF SHEET N/A
SERIAL LINK CODE 5x
RTDL PARM ID 0x59

E87 TO E90-IN
E88 TO E91-IN
E89 TO E92-OUT

PARM ID
E93 TO E101-IN
E94 TO E102-OUT
E95 TO E103-IN
E96 TO E104-OUT
E97 TO E105-OUT
E98 TO E106-IN
E99 TO E107-IN
E100 TO E108-OUT

Phil Pape, Controls Division 9/12/2002 4:22 PM 8529_30.dwg

-3	-2	-1	REF DESIGNATOR	ITEM NO.	DESCRIPTION	MAT'L DWG NO./BNL NO.
QTY REQD						

INTERPRET IN GENERAL ACCORDANCE WITH ASME Y14.24M-1989
UNLESS OTHERWISE SPECIFIED DIMENSIONS ARE IN INCHES
DECIMAL TOLERANCES .X ±.030 .XX ±.015 .XXX ±.005
ANGULAR TOLERANCE ± .5°
OUTSTANDING ECN
NA FINISH
BREAK SHARP EDGES MAX. XX MIN. XX

Q.A. CATEGORY A-3
DRAWN BY PAPE DATE 08/12/2002
CHECKED BY
DESIGN APPROVAL
ENGINEER APPROVAL H. HARTMANN
SUPVR. APPROVAL
NEXT ASSEMBLY

BROOKHAVEN NATIONAL LABORATORY
UPTON, N.Y. 11973
RHIC CONTROLS WIRING DIAGRAM
SERVICE BLDG 1004B
RTDL INPUTS

SIZE D
DRAWING NUMBER 94028529
REV. A
MATERIAL: ——— SCALE: NA WEIGHT: – SHEET 30 OF XX

*AUTOCAD

REV.	ZONE	ECN NO.	DATE	BY	CKR	APP.

RTDL INPUT MODULE (2-D)

BLDG #: 1004B
RACK #: R4B05
CHASSIS ID: CEX-4B-RTDL2
SLOT #: 18
A16 BASE ADDRESS: 7D00

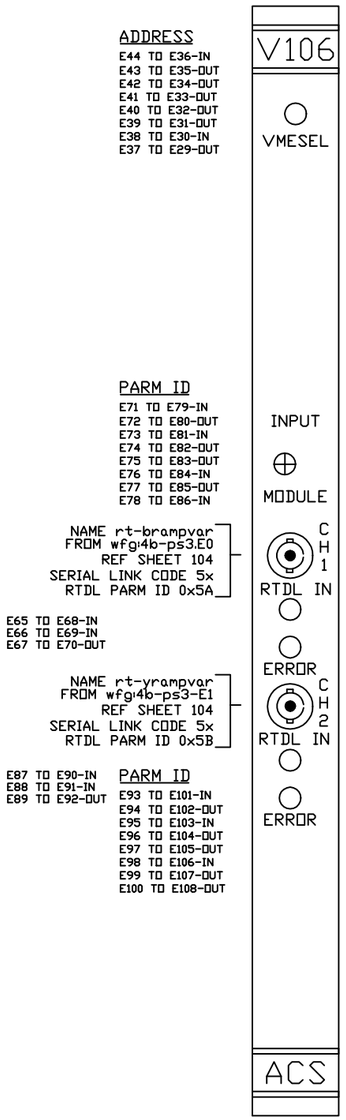

RTDL INPUT MODULE (2-E)

BLDG #: 1004B
RACK #: R4B05
CHASSIS ID: CEX-4B-RTDL2
SLOT #: 19
A16 BASE ADDRESS: 7E00

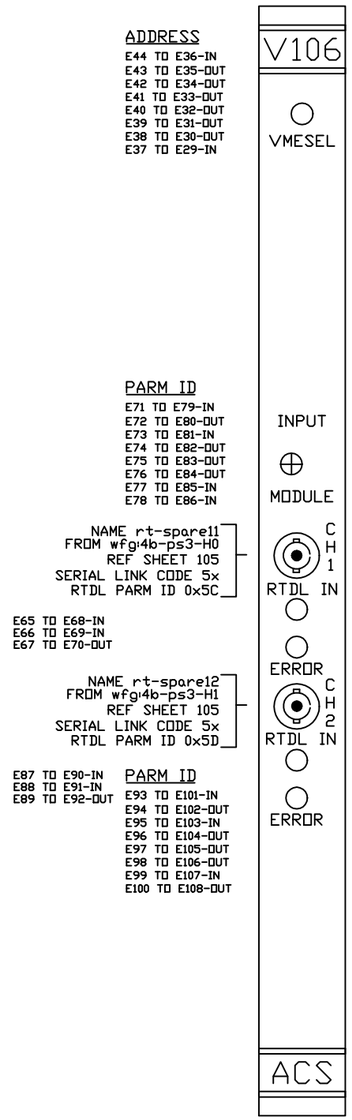

RTDL INPUT MODULE (2-F)

BLDG #: 1004B
RACK #: R4B05
CHASSIS ID: CEX-4B-RTDL2
SLOT #: 20
A16 BASE ADDRESS: 7F00

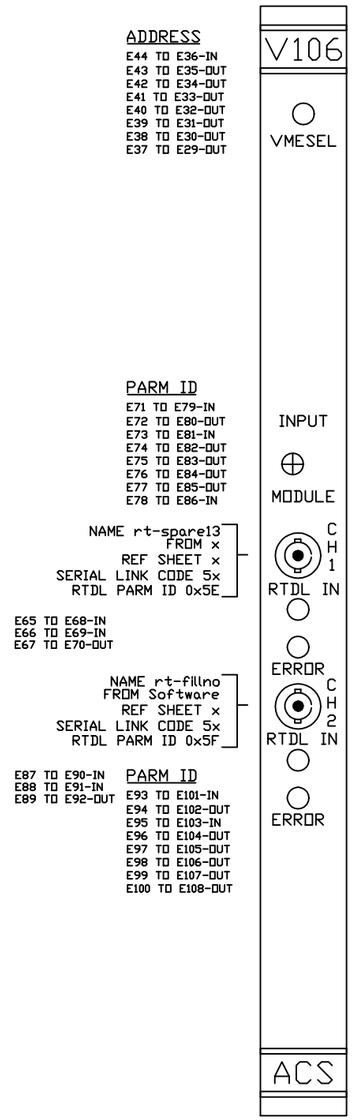

C-A, BNL 3/20/01 1:56 PM 8529_31.dwg

-3	-2	-1	REF DESIGNATOR	ITEM NO.	DESCRIPTION	MAT'L DWG NO./BNL NO.
QTY REQD						

INTERPRET IN GENERAL ACCORDANCE WITH ASME Y14.24M-1989

UNLESS OTHERWISE SPECIFIED DIMENSIONS ARE IN INCHES

DECIMAL TOLERANCES
.X ±.030
.XX ±.015
.XXX ±.005
ANGULAR TOLERANCE
± .5°

NA FINISH — BREAK SHARP EDGES — MAX. XX MIN. XX

OUTSTANDING ECN

Q.A. CATEGORY A-3		DATE
DRAWN BY	Ed Koropsak	9/30/98
CHECKED BY		
DESIGN APPROVAL		
ENGINEER APPROVAL	R. MICHNOFF	9/30/98
SUPVR. APPROVAL		

NEXT ASSEMBLY

BROOKHAVEN NATIONAL LABORATORY
UPTON, N.Y. 11973

RHIC CONTROLS WIRING DIAGRAM
SERVICE BLDG 1004B
RTDL INPUTS

SIZE D — DRAWING NUMBER 94028529 — REV. A

MATERIAL: ——— SCALE: NA WEIGHT: – SHEET 31 OF XX

*AUTOCAD

REV.	ZONE	ECN NO.	DATE	BY	CKR	APP.

C-A, BNL 3/20/01 1:59 PM 8529_52.dwg

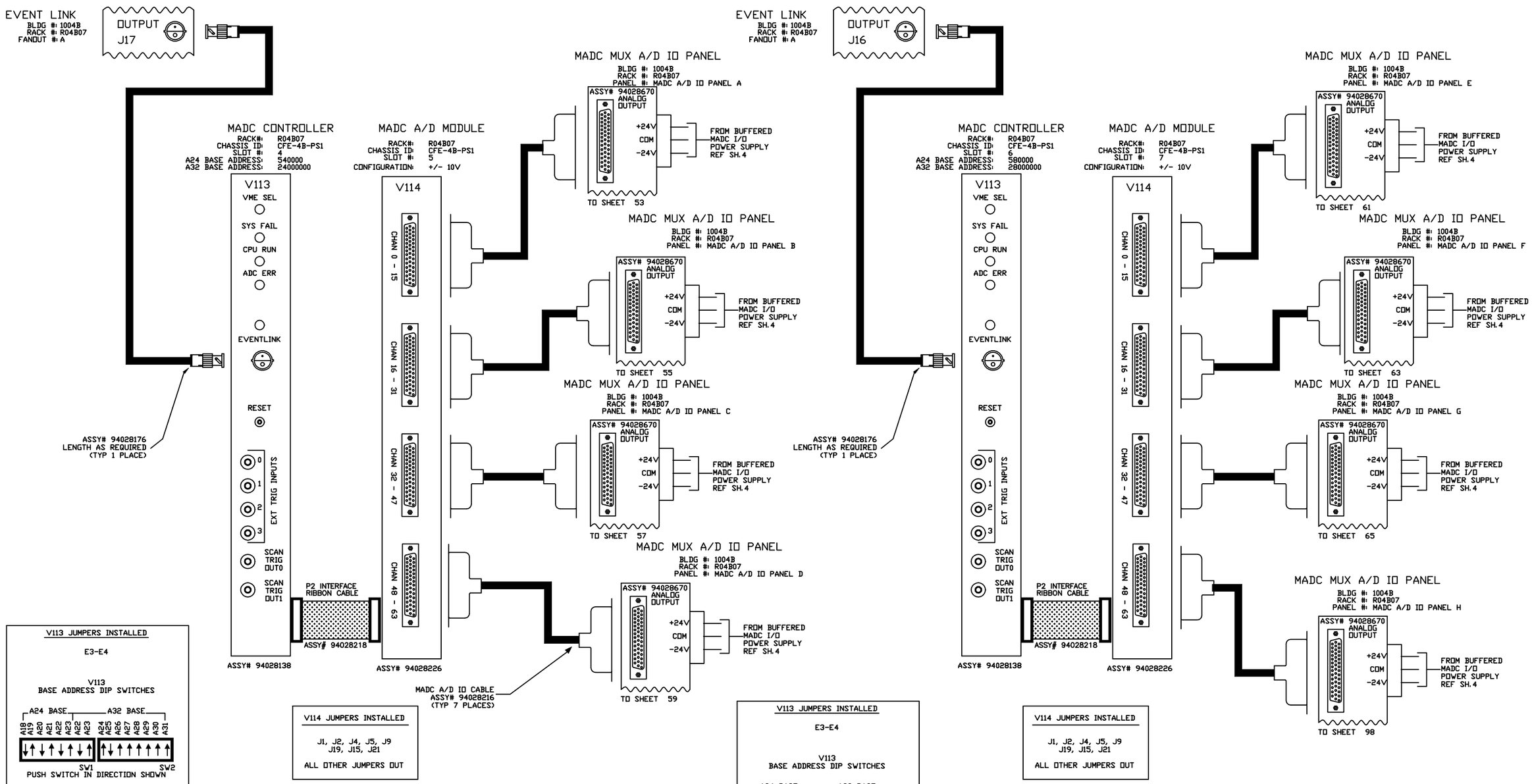

-3	-2	-1	REF DESIGNATOR	ITEM NO.	DESCRIPTION	MAT'L DWG NO./BNL NO.
QTY REQD						

INTERPRET IN GENERAL ACCORDANCE WITH ASME Y14.24M-1989

UNLESS OTHERWISE SPECIFIED DIMENSIONS ARE IN INCHES

DECIMAL TOLERANCES
.X ±.030
.XX ±.015
.XXX ±.005
ANGULAR TOLERANCE
± .5°

NA FINISH

BREAK SHARP EDGES
MAX. XX MIN. XX

OUTSTANDING ECN

Q.A. CATEGORY A-3		DATE
DRAWN BY	Ed Koropsak	10/2/98
CHECKED BY		
DESIGN APPROVAL		
ENGINEER APPROVAL	R. MICHNOFF	10/2/98
SUPVR. APPROVAL		

NEXT ASSEMBLY

BROOKHAVEN NATIONAL LABORATORY
UPTON, N.Y. 11973

RHIC CONTROLS WIRING DIAGRAM

1004B, VME CHASSIS CFE-4B-PS1

MADC SYSTEM

SIZE D | 94028529 | REV. A

DRAWING NUMBER

MATERIAL: ——— SCALE: FULL WEIGHT: – SHEET 52

*AUTOCAD

REV.	ZONE	ECN NO.	DATE	BY	CKR	APP.

ACS, BNL 8/27/99 1:09 PM 8529_53.dwg

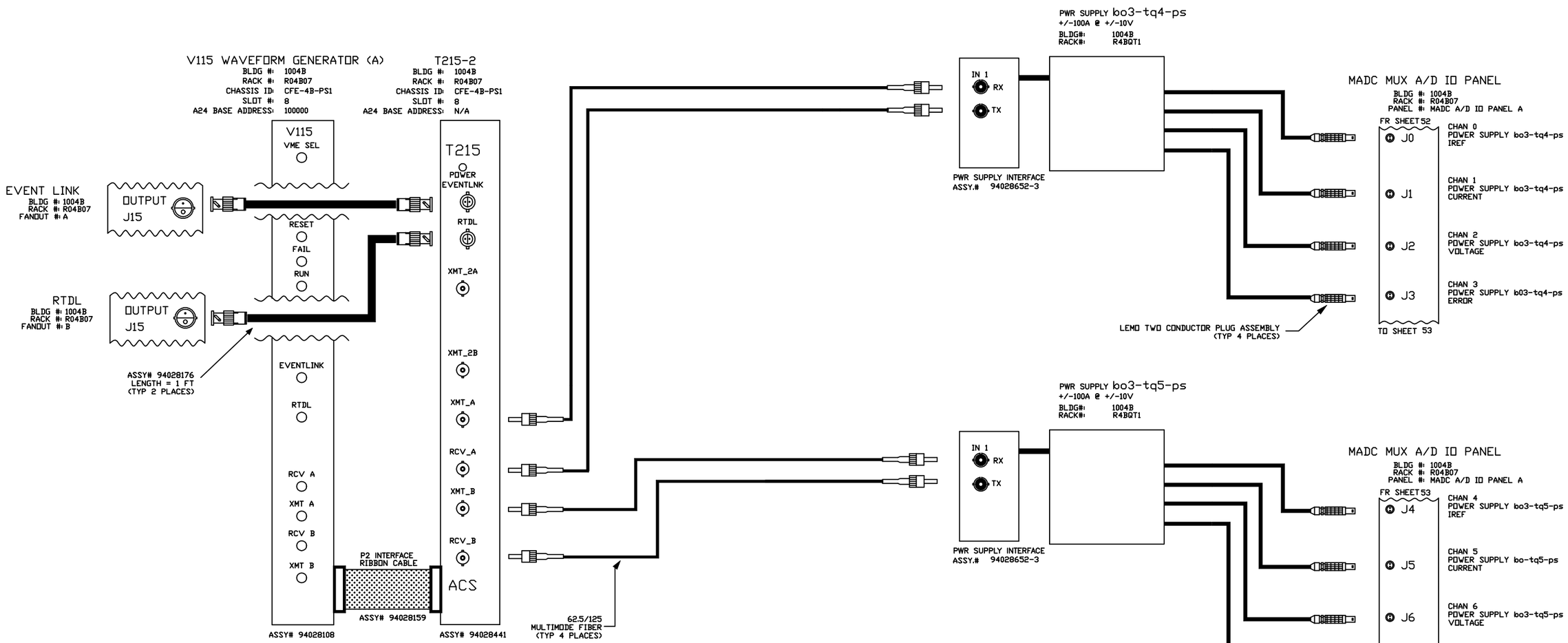

V115 JUMPER LIST
JP3=IN JP4=IN JP1=OUT JP2=OUT
A24 BASE ADDRESS JB1-A23=IN JB1-A22=IN JB1-A21=IN JB1-A20=OUT JB1-A19=IN JB1-A18=IN

-3	-2	-1	REF DESIGNATOR	ITEM NO.	DESCRIPTION	MAT'L DWG NO./BNL NO.
QTY REQD						

INTERPRET IN GENERAL ACCORDANCE WITH ASME Y14.24M-1989

UNLESS OTHERWISE SPECIFIED DIMENSIONS ARE IN INCHES

DECIMAL TOLERANCES
.X ±.030
.XX ±.015
.XXX ±.005
ANGULAR TOLERANCE
± .5°

OUTSTANDING ECN: NA

FINISH: √

BREAK SHARP EDGES
MAX. XX MIN. XX

Q.A. CATEGORY A-3

		DATE
DRAWN BY	Ed Koropsak	9/30/98
CHECKED BY		
DESIGN APPROVAL		
ENGINEER APPROVAL	R.MICHNOFF	9/30/98
SUPVR. APPROVAL		

NEXT ASSEMBLY

BROOKHAVEN NATIONAL LABORATORY
UPTON, N.Y. 11973

RHIC CONTROLS WIRING DIAGRAM

BLDG. 1004B, CFE-4B-PS1

bo3-tq4-ps/bo3-tq5-ps

SIZE: D

DRAWING NUMBER: 94028529

REV.: A

MATERIAL: ——— SCALE: NA WEIGHT: – SHEET 53 OF x

1 *AUTOCAD

REV.	ZONE	ECN NO.	DATE	BY	CKR	APP.

ACS, BNL 8/27/99 1:10 PM 8529_54.dwg

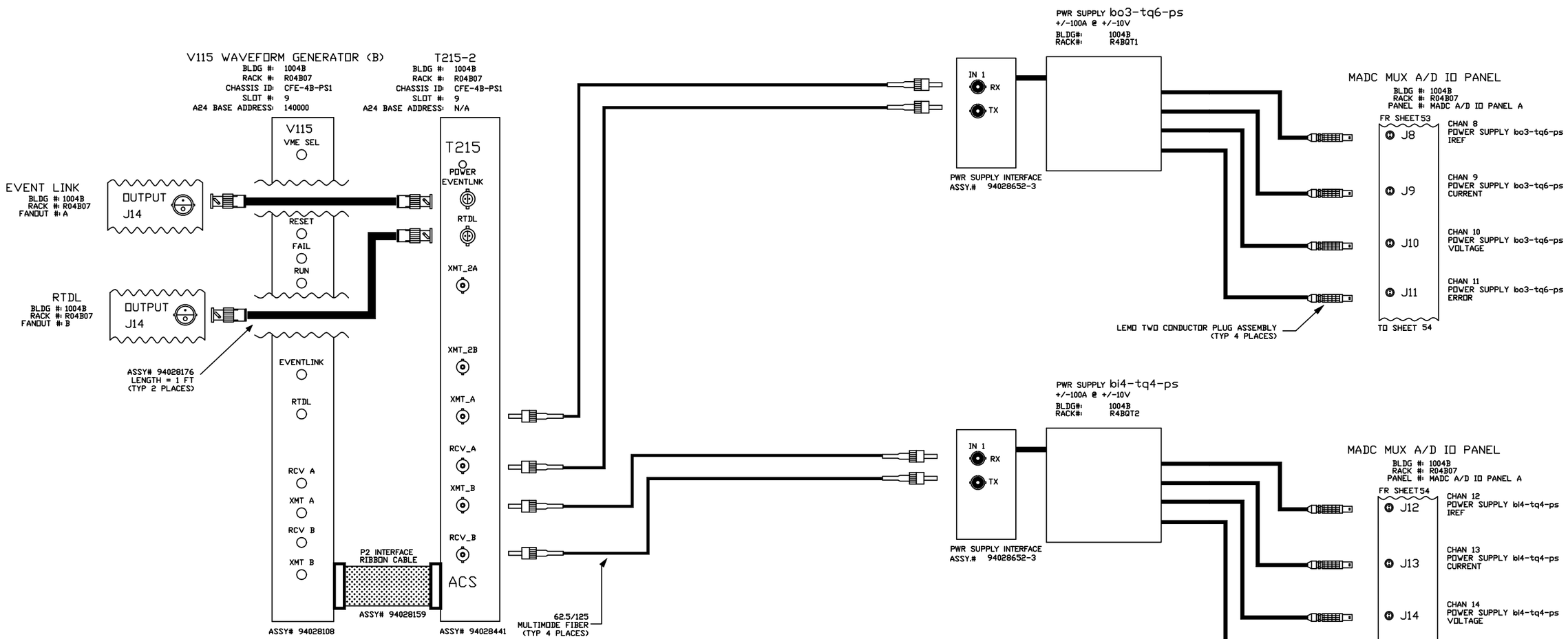

V115 JUMPER LIST
JP3=IN JP4=IN JP1=OUT JP2=OUT
A24 BASE ADDRESS JB1-A23=IN JB1-A22=IN JB1-A21=IN JB1-A20=OUT JB1-A19=IN JB1-A18=OUT

-3	-2	-1	REF DESIGNATOR	ITEM NO.	DESCRIPTION	MAT'L. DWG NO.,SPEC. NO.
QTY REQD						

INTERPRET IN GENERAL ACCORDANCE WITH ASME Y14.24M-1989

UNLESS OTHERWISE SPECIFIED DIMENSIONS ARE IN INCHES

DECIMAL TOLERANCES
.X ±.030
.XX ±.015
.XXX ±.005
ANGULAR TOLERANCE
± .5°

NA FINISH

BREAK SHARP EDGES
MAX. XX MIN. XX

OUTSTANDING ECN

Q.A. CATEGORY A-3		DATE
DRAWN BY	Ed Koropsak	9/30/98
CHECKED BY		
DESIGN APPROVAL		
ENGINEER APPROVAL	R.MICHNOFF	5/20/98
SUPVR. APPROVAL		
NEXT ASSEMBLY		

BROOKHAVEN NATIONAL LABORATORY
UPTON, N.Y. 11973

RHIC CONTROLS WIRING DIAGRAM

BLDG. 1004B, CFE-4B-PS1

bo3-tq6-ps/bi4-tq4-ps

SIZE D — 94028529 — REV. A

DRAWING NUMBER

MATERIAL: ——— SCALE: NA WEIGHT: – SHEET 54 OF x

*AUTOCAD

REV.	ZONE	ECN NO.	DATE	BY	CKR	APP.

ACS, BNL 8/27/99 1:11 PM 8529_55.dwg

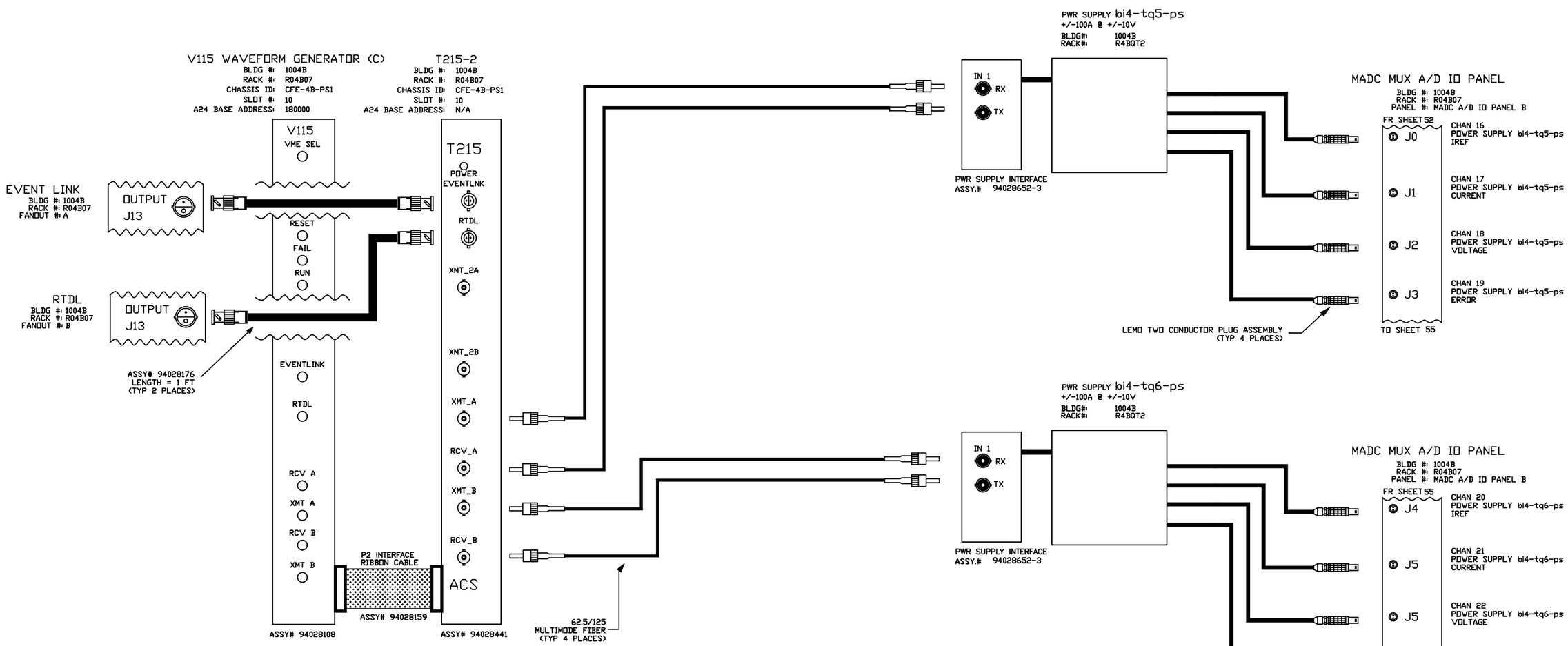

V115 JUMPER LIST
JP3=IN JP4=IN JP1=OUT JP2=OUT
A24 BASE ADDRESS JB1-A23=IN JB1-A22=IN JB1-A21=IN JB1-A20=OUT JB1-A19=OUT JB1-A18=IN

-3	-2	-1	REF DESIGNATOR	ITEM NO.	DESCRIPTION	MAT'L. DWG NO.,BNL NO.
QTY REQD						

INTERPRET IN GENERAL ACCORDANCE WITH ASME Y14.24M-1989

UNLESS OTHERWISE SPECIFIED DIMENSIONS ARE IN INCHES

DECIMAL TOLERANCES
.X ±.030
.XX ±.015
.XXX ±.005
ANGULAR TOLERANCE
± .5°

NA FINISH

BREAK SHARP EDGES
MAX. XX MIN. XX

OUTSTANDING ECN

Q.A. CATEGORY A-3		DATE
DRAWN BY	Ed Koropsak	9/30/98
CHECKED BY		
DESIGN APPROVAL		
ENGINEER APPROVAL	R.MICHNOFF	9/30/98
SUPVR. APPROVAL		

NEXT ASSEMBLY

BROOKHAVEN NATIONAL LABORATORY
UPTON, N.Y. 11973

RHIC CONTROLS WIRING DIAGRAM

BLDG. 1004B, CFE-4B-PS1

bi4-tq5-ps/bi4-tq6-ps

SIZE D | DRAWING NUMBER 94028529 | REV. A

MATERIAL: ——— SCALE: NA WEIGHT: – SHEET 55 OF x

*AUTOCAD

ACS, BNL 8/27/99 1:12 PM 8529_56.dwg

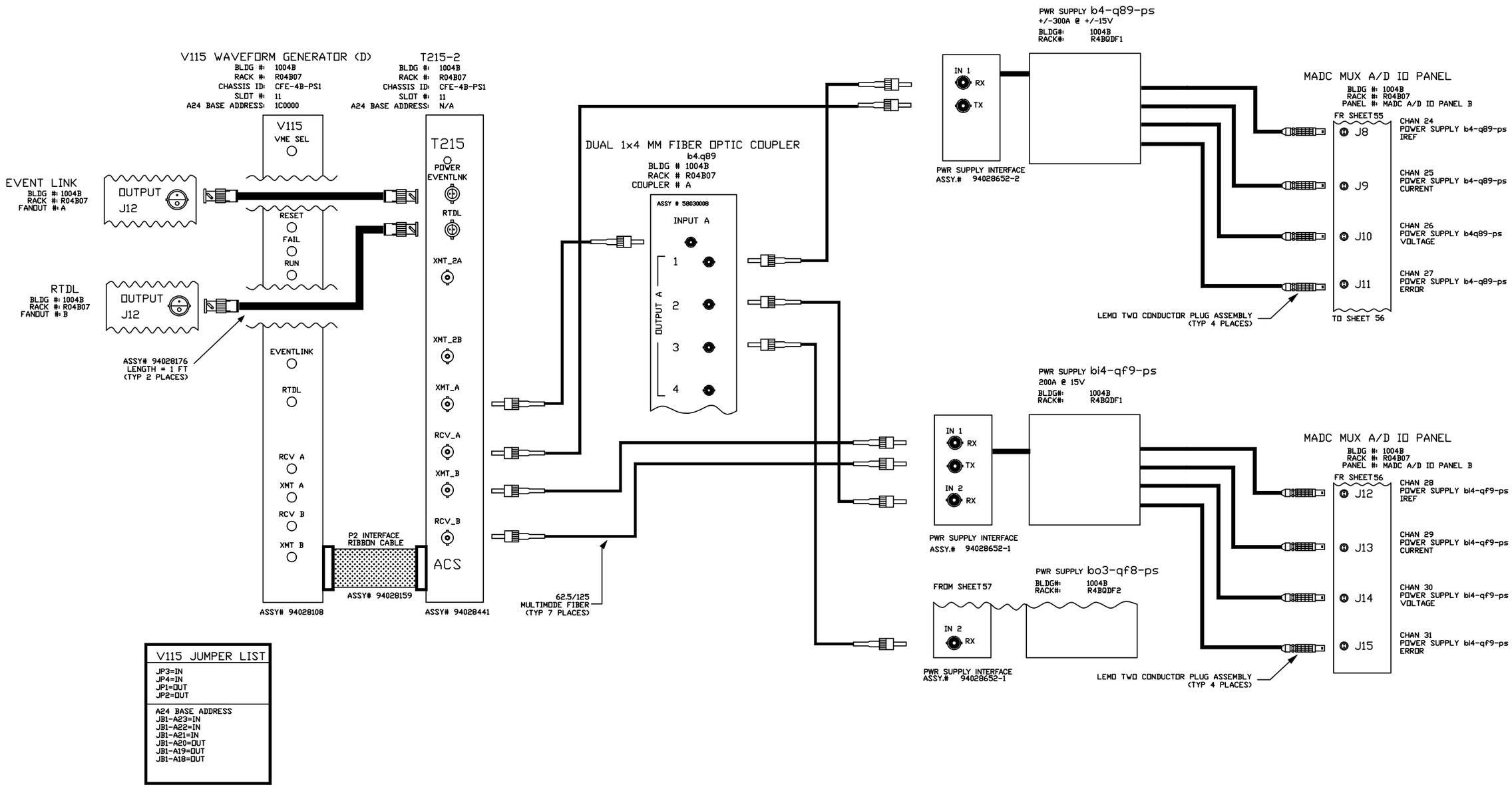

V115 JUMPER LIST
JP3=IN JP4=IN JP1=OUT JP2=OUT
A24 BASE ADDRESS JB1-A23=IN JB1-A22=IN JB1-A21=IN JB1-A20=OUT JB1-A19=OUT JB1-A18=OUT

-3	-2	-1	REF DESIGNATOR	ITEM NO.	DESCRIPTION	MAT'L DWG NO.,BNL NO.
QTY REQD						

INTERPRET IN GENERAL ACCORDANCE WITH ASME Y14.24M-1989

UNLESS OTHERWISE SPECIFIED DIMENSIONS ARE IN INCHES

DECIMAL TOLERANCES
.X ±.030
.XX ±.015
.XXX ±.005
ANGULAR TOLERANCE
± .5°

NA FINISH

BREAK SHARP EDGES
MAX. XX MIN. XX

OUTSTANDING ECN

Q.A. CATEGORY A-3		DATE
DRAWN BY	Ed Koropsak	9/30/98
CHECKED BY		
DESIGN APPROVAL		
ENGINEER APPROVAL	R.MICHNOFF	9/30/98
SUPVR. APPROVAL		

NEXT ASSEMBLY

BROOKHAVEN NATIONAL LABORATORY
UPTON, N.Y. 11973

RHIC CONTROLS WIRING DIAGRAM
BLDG. 1004B, CFE-4B-PS1
b4-q89-ps/bi4-qf9-ps

SIZE D
94028529
DRAWING NUMBER
REV. A

MATERIAL: ——— SCALE: NA WEIGHT: – SHEET 56 OF x

*AUTOCAD

REV.	ZONE	ECN NO.	DATE	BY	CKR	APP.

ACS, BNL 8/27/99 1:13 PM 8529_57.dwg

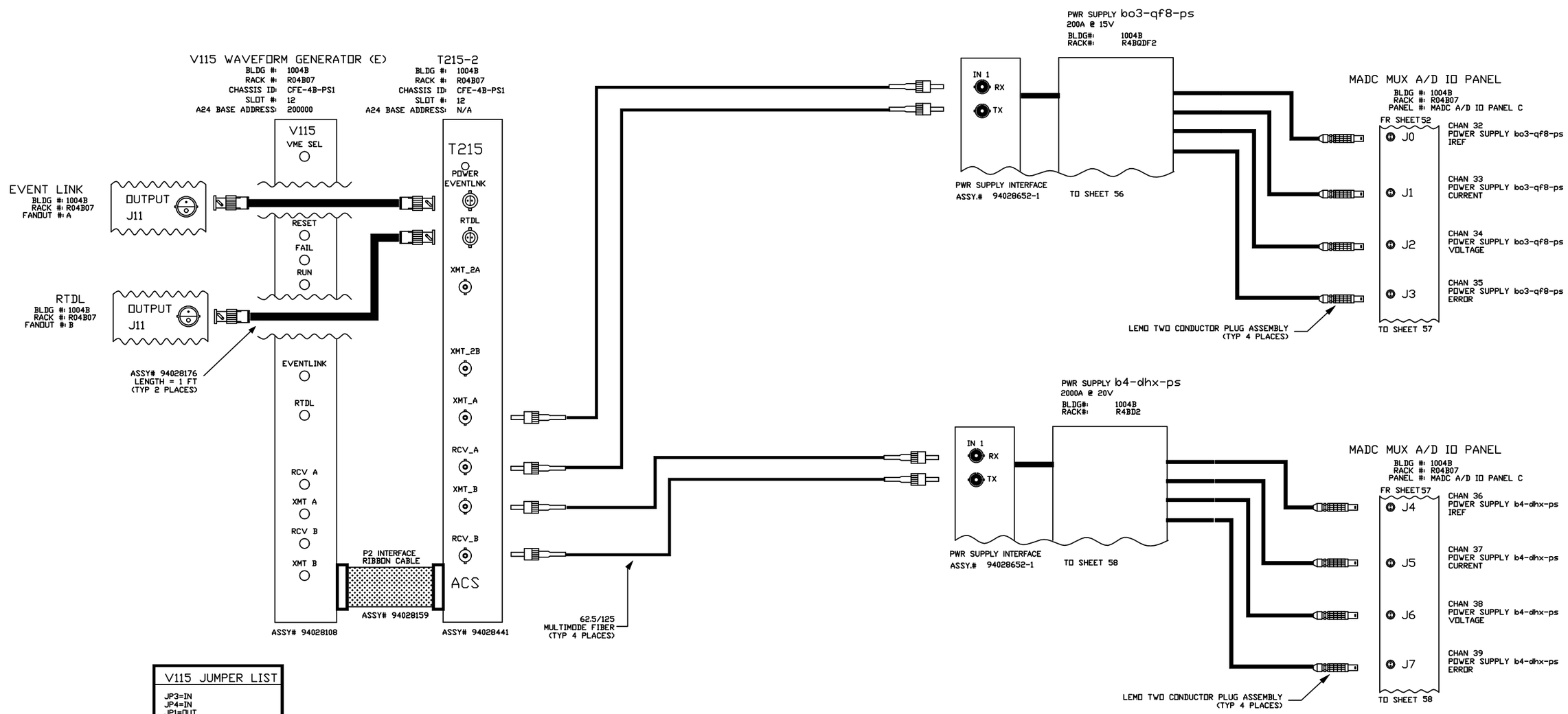

V115 JUMPER LIST
JP3=IN JP4=IN JP1=OUT JP2=OUT
A24 BASE ADDRESS JB1-A23=IN JB1-A22=IN JB1-A21=OUT JB1-A20=IN JB1-A19=IN JB1-A18=IN

-3	-2	-1	REF DESIGNATOR	ITEM NO.	DESCRIPTION	MAT'L. DWG NO./INL NO.
QTY REQD						

INTERPRET IN GENERAL ACCORDANCE WITH ASME Y14.24M-1989

UNLESS OTHERWISE SPECIFIED DIMENSIONS ARE IN INCHES

DECIMAL TOLERANCES
X ±.030
.XX ±.015
.XXX ±.005
ANGULAR TOLERANCE
± .5°

NA FINISH — BREAK SHARP EDGES — MAX. XX MIN. XX

OUTSTANDING ECN

Q.A. CATEGORY A-3		DATE
DRAWN BY	Ed Koropsak	10/1/98
CHECKED BY		
DESIGN APPROVAL		
ENGINEER APPROVAL	R.MICHNOFF	10/1/98
SUPVR. APPROVAL		

NEXT ASSEMBLY

BROOKHAVEN NATIONAL LABORATORY
UPTON, N.Y. 11973

RHIC CONTROLS WIRING DIAGRAM

BLDG. 1004B, CFE-4B-PS1

bo3-qf8-ps/b4-dhx-ps

SIZE D — DRAWING NUMBER 94028529 — REV. A

MATERIAL: ——— SCALE: NA WEIGHT: – SHEET 57 OF x

1 *AUTOCAD

ACS, BNL 8/27/99 1:14 PM 8529_58.dwg

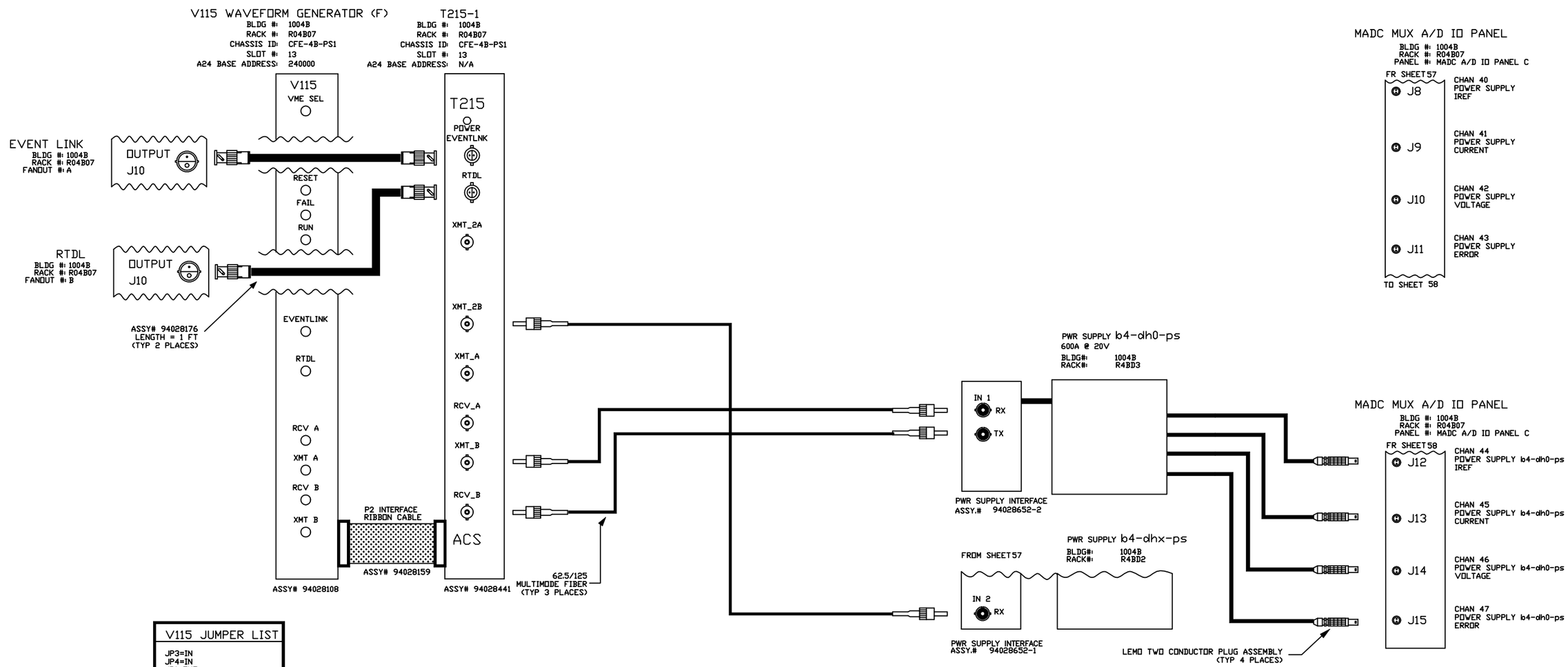

V115 JUMPER LIST
JP3=IN JP4=IN JP1=OUT JP2=OUT
A24 BASE ADDRESS JB1-A23=IN JB1-A22=IN JB1-A21=OUT JB1-A20=IN JB1-A19=IN JB1-A18=OUT

-3	-2	-1	REF DESIGNATOR	ITEM NO.	DESCRIPTION	MAT'L DWG NO.,BNL NO.
QTY REQD						

INTERPRET IN GENERAL ACCORDANCE WITH ASME Y14.24M-1989

UNLESS OTHERWISE SPECIFIED DIMENSIONS ARE IN INCHES

DECIMAL TOLERANCES
.X ±.030
.XX ±.015
.XXX ±.005
ANGULAR TOLERANCE
± .5°

FINISH: NA — BREAK SHARP EDGES — MAX. XX MIN. XX

OUTSTANDING ECN

Q.A. CATEGORY A-3

		DATE
DRAWN BY	Ed Koropsak	10/1/98
CHECKED BY		
DESIGN APPROVAL		
ENGINEER APPROVAL	R.MICHNOFF	10/1/98
SUPVR. APPROVAL		

NEXT ASSEMBLY

BROOKHAVEN NATIONAL LABORATORY
UPTON, N.Y. 11973

RHIC CONTROLS WIRING DIAGRAM

BLDG. 1004B, CFE-4B-PS1

b4-dh0-ps

SIZE D — DRAWING NUMBER 94028529 — REV. A

MATERIAL: ——— SCALE: NA WEIGHT: – SHEET 58 OF x

*AUTOCAD

REV.	ZONE	ECN NO.	DATE	BY	CKR	APP.

ACS, BNL 8/27/99 1:15 PM 8529_59.dwg

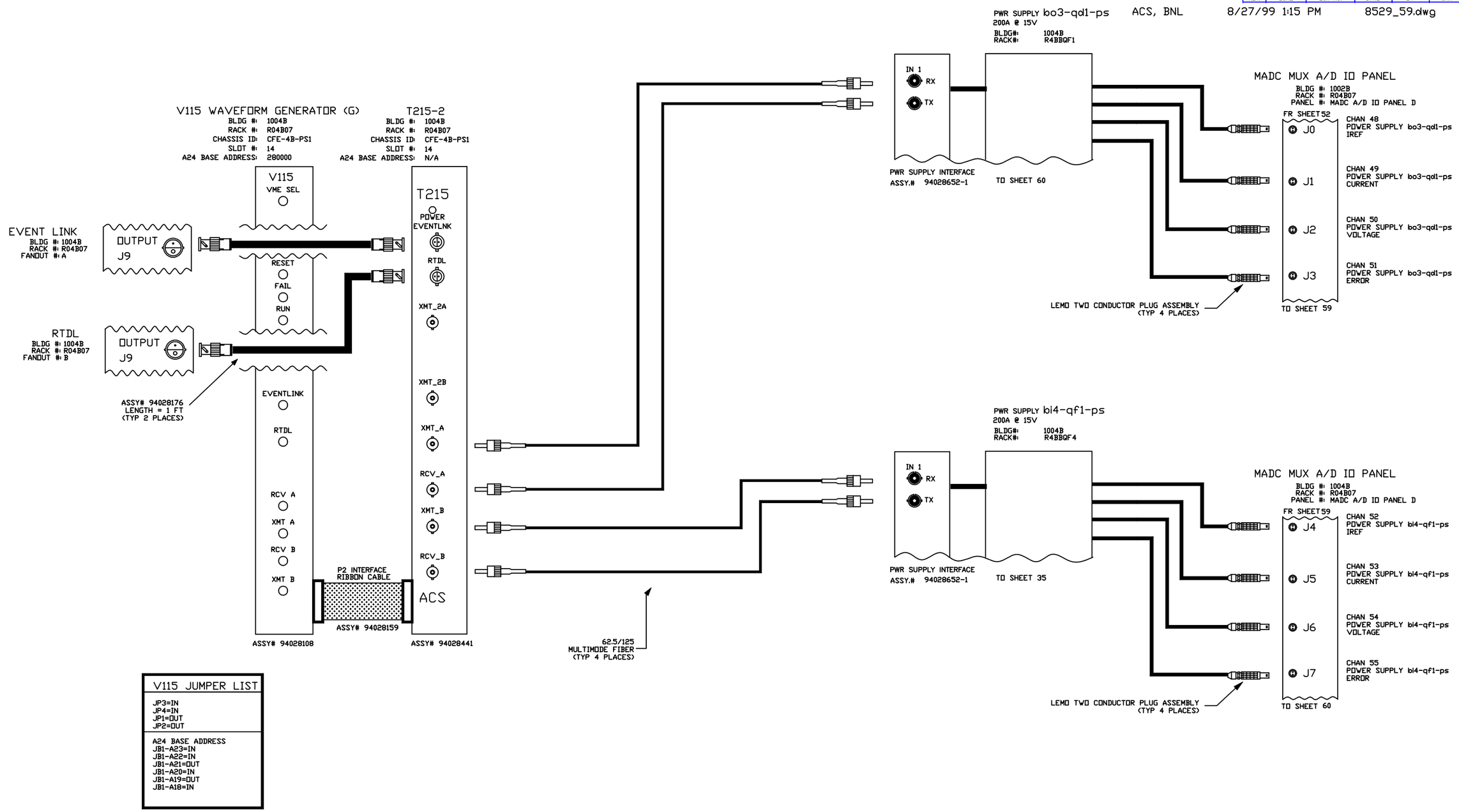

V115 JUMPER LIST

JP3=IN
JP4=IN
JP1=OUT
JP2=OUT

A24 BASE ADDRESS
JB1-A23=IN
JB1-A22=IN
JB1-A21=OUT
JB1-A20=IN
JB1-A19=OUT
JB1-A18=IN

-3	-2	-1	REF DESIGNATOR	ITEM NO.	DESCRIPTION	MAT'L DWG NO./BNL NO.
QTY REQD						

INTERPRET IN GENERAL ACCORDANCE WITH ASME Y14.24M-1989

UNLESS OTHERWISE SPECIFIED DIMENSIONS ARE IN INCHES

DECIMAL TOLERANCES
.X ±.030
.XX ±.015
.XXX ±.005
ANGULAR TOLERANCE
± .5°

NA FINISH

BREAK SHARP EDGES
MAX. XX MIN. XX

OUTSTANDING ECN

Q.A. CATEGORY A-3		DATE
DRAWN BY	Ed Koropsak	10/1/98
CHECKED BY		
DESIGN APPROVAL		
ENGINEER APPROVAL	R.MICHNOFF	10/1/98
SUPVR. APPROVAL		

NEXT ASSEMBLY

BROOKHAVEN NATIONAL LABORATORY
UPTON, N.Y. 11973

RHIC CONTROLS WIRING DIAGRAM
BLDG. 1004B, CFE-4B-PS1
bo3-qd1-ps/bi4-qf1-ps

SIZE D | 94028529 | REV. A
DRAWING NUMBER

MATERIAL: ——— SCALE: NA WEIGHT: – SHEET 59 OF x

1 *AUTOCAD

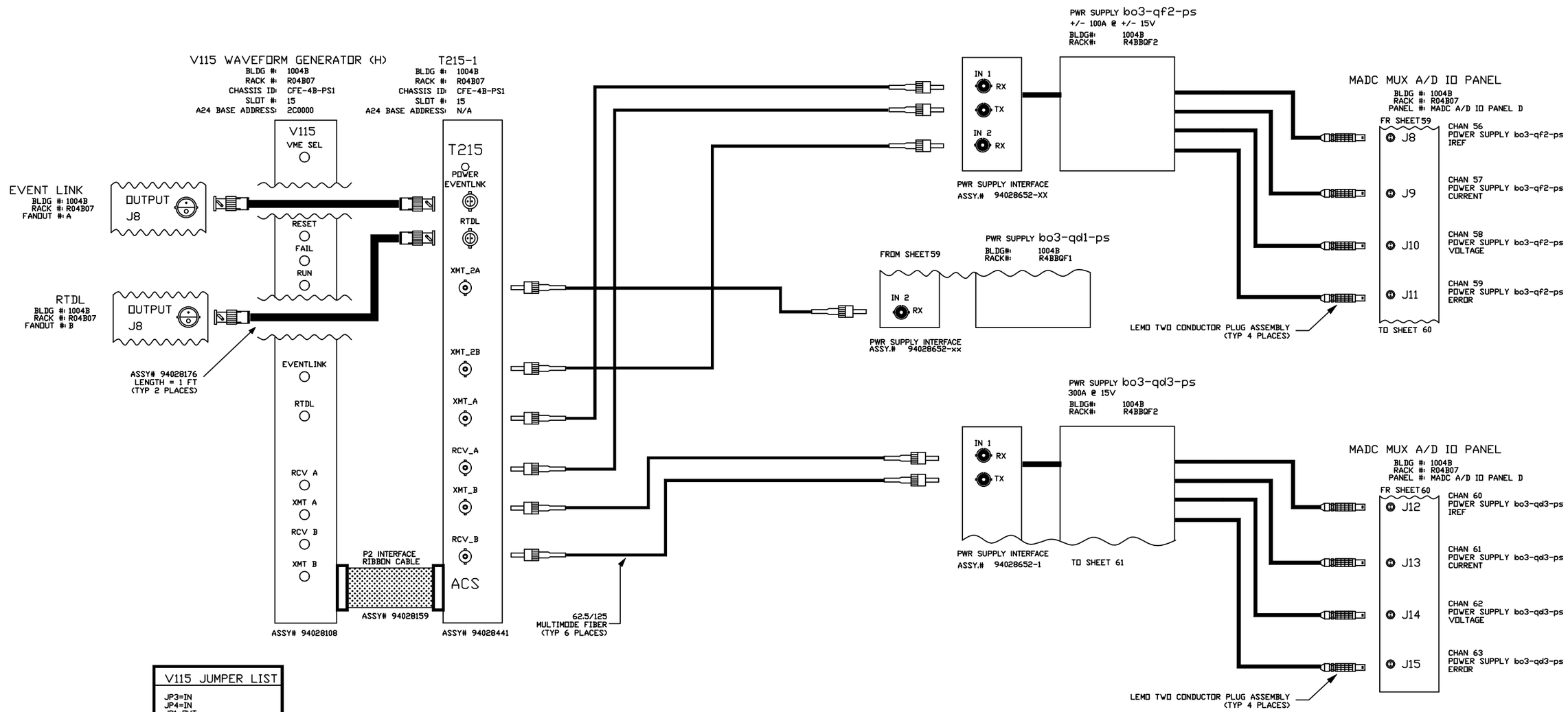

V115 JUMPER LIST
JP3=IN JP4=IN JP1=OUT JP2=OUT
A24 BASE ADDRESS JB1-A23=IN JB1-A22=IN JB1-A21=OUT JB1-A20=IN JB1-A19=OUT JB1-A18=OUT

REV.	ZONE	ECN NO.	DATE	BY	CKR	APP.

-3	-2	-1	REF DESIGNATOR	ITEM NO.	DESCRIPTION	MAT'L DWG NO./INL NO.
QTY REQD						

INTERPRET IN GENERAL ACCORDANCE WITH ASME Y14.24M-1989

UNLESS OTHERWISE SPECIFIED DIMENSIONS ARE IN INCHES

DECIMAL TOLERANCES
.X ±.030
.XX ±.015
.XXX ±.005
ANGULAR TOLERANCE
± .5°

NA FINISH

BREAK SHARP EDGES
MAX. XX MIN. XX

OUTSTANDING ECN

Q.A. CATEGORY A-3		DATE
DRAWN BY	Ed Koropsak	10/1/98
CHECKED BY		
DESIGN APPROVAL		
ENGINEER APPROVAL	R.MICHNOFF	10/1/98
SUPVR. APPROVAL		

NEXT ASSEMBLY

BROOKHAVEN NATIONAL LABORATORY
UPTON, N.Y. 11973

RHIC CONTROLS WIRING DIAGRAM

BLDG. 1004B, CFE-4B-PS1

bo3-qf2-ps/bo3-qd3-ps

SIZE D | DRAWING NUMBER 94028529 | REV. A

MATERIAL: ——— SCALE: NA WEIGHT: – SHEET 60 OF x

*AUTOCAD

REV.	ZONE	ECN NO.	DATE	BY	CKR	APP.

ACS, BNL 8/27/99 1:18 PM 8529_61.dwg

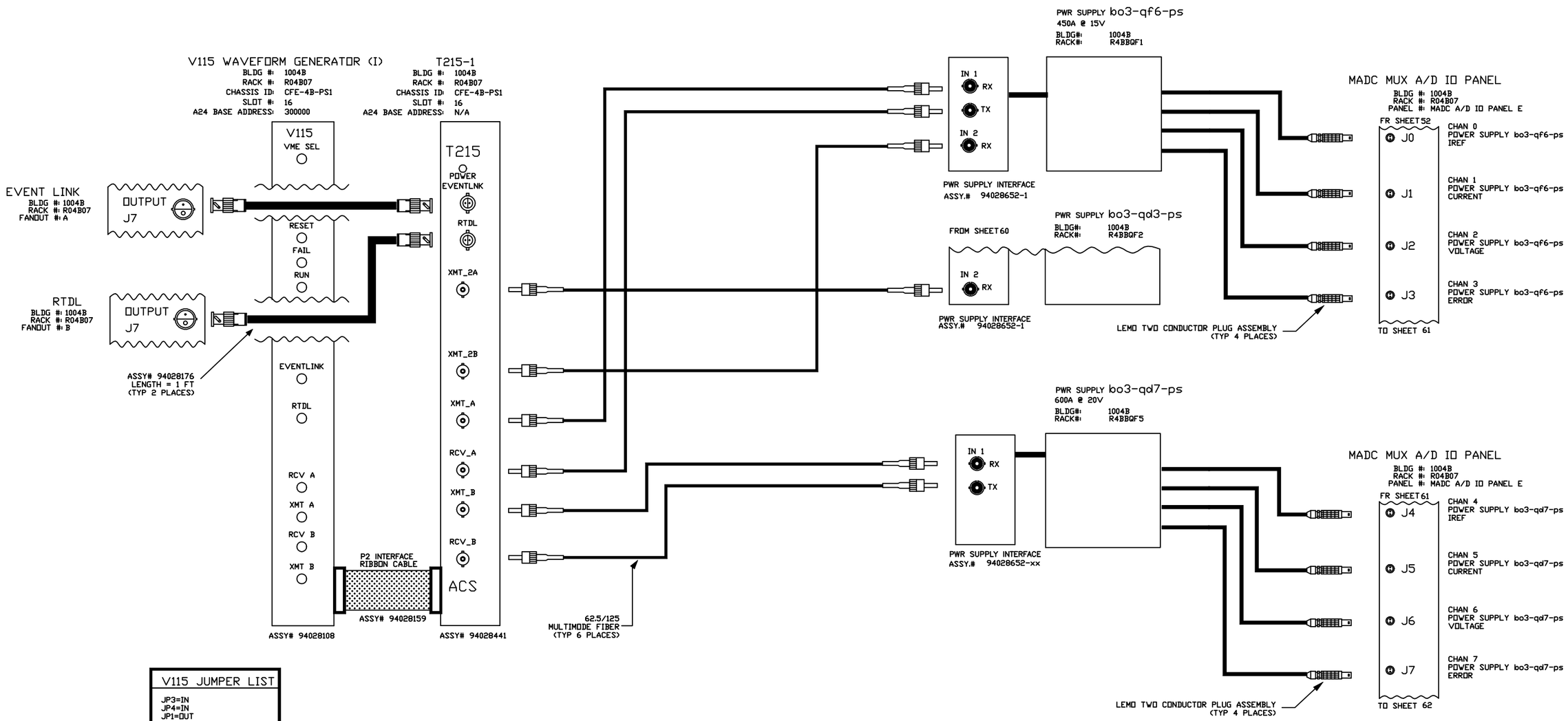

V115 JUMPER LIST
JP3=IN JP4=IN JP1=OUT JP2=OUT
A24 BASE ADDRESS JB1-A23=IN JB1-A22=IN JB1-A21=OUT JB1-A20=OUT JB1-A19=IN JB1-A18=IN

-3	-2	-1	REF DESIGNATOR	ITEM NO.	DESCRIPTION	MAT'L DWG NO.,BNL NO.
QTY REQD						

INTERPRET IN GENERAL ACCORDANCE WITH ASME Y14.24M-1989

UNLESS OTHERWISE SPECIFIED DIMENSIONS ARE IN INCHES

DECIMAL TOLERANCES .X ±.030 .XX ±.015 .XXX ±.005 ANGULAR TOLERANCE ± .5°

NA FINISH

BREAK SHARP EDGES MAX. XX MIN. XX

OUTSTANDING ECN

Q.A. CATEGORY A-3		DATE
DRAWN BY	Ed Koropsak	10/1/98
CHECKED BY		
DESIGN APPROVAL		
ENGINEER APPROVAL	R.MICHNOFF	10/1/98
SUPVR. APPROVAL		
NEXT ASSEMBLY		

BROOKHAVEN NATIONAL LABORATORY
UPTON, N.Y. 11973

RHIC CONTROLS WIRING DIAGRAM

BLDG. 1004B, CFE-4B-PS1

bo3-qf6-ps/bo3-qd7-ps

SIZE D — DRAWING NUMBER 94028529 — REV. A

MATERIAL: ——— SCALE: NA WEIGHT: – SHEET 61 OF x

*AUTOCAD

REV.	ZONE	ECN NO.	DATE	BY	CKR	APP.

ACS, BNL 8/27/99 1:19 PM 8529_62.dwg

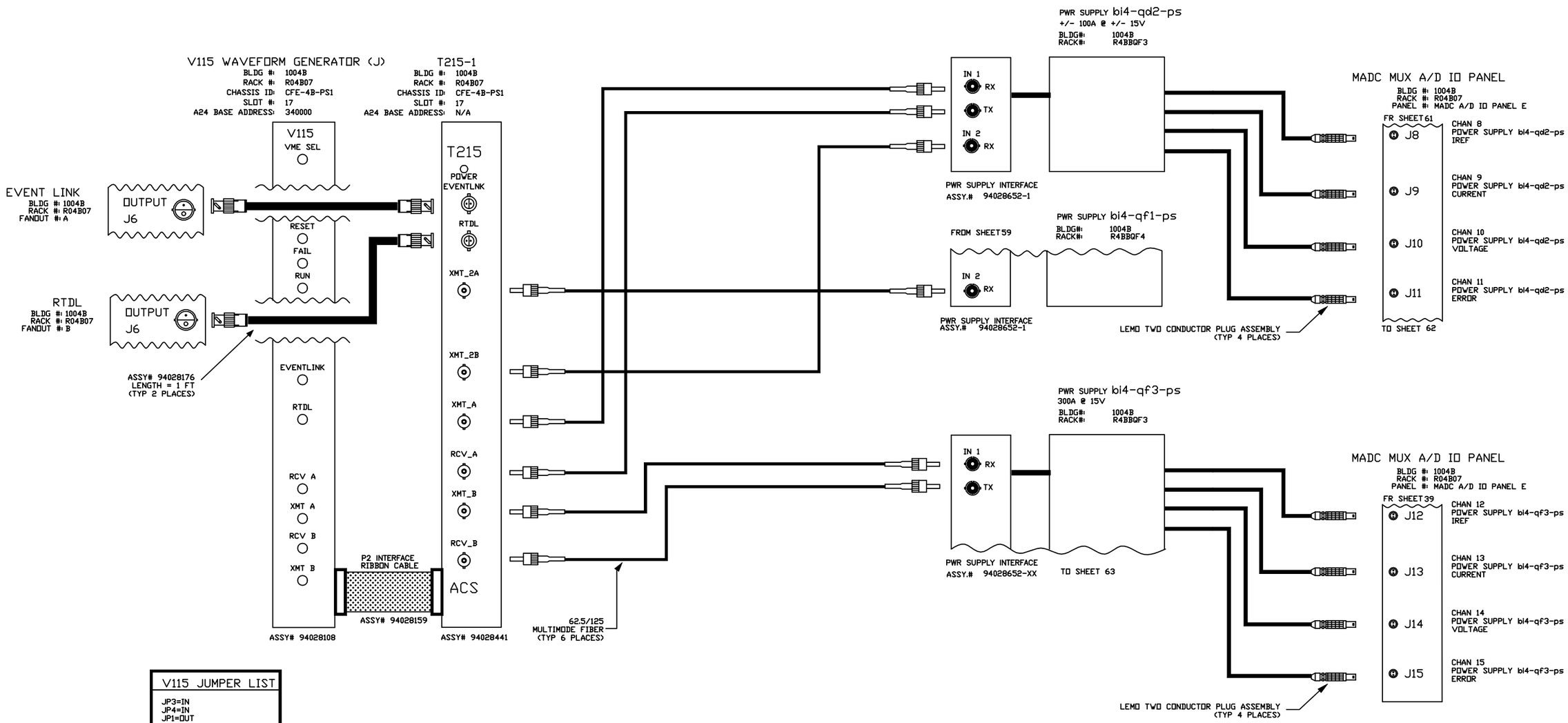

V115 JUMPER LIST
JP3=IN JP4=IN JP1=OUT JP2=OUT
A24 BASE ADDRESS JB1-A23=IN JB1-A22=IN JB1-A21=OUT JB1-A20=OUT JB1-A19=IN JB1-A18=OUT

-3	-2	-1	REF DESIGNATOR	ITEM NO.	DESCRIPTION	MAT'L DWG NO.,BNL NO.
QTY REQD						

INTERPRET IN GENERAL ACCORDANCE WITH ASME Y14.24M-1989

UNLESS OTHERWISE SPECIFIED DIMENSIONS ARE IN INCHES

DECIMAL TOLERANCES
.X ±.030
.XX ±.015
.XXX ±.005
ANGULAR TOLERANCE
± .5°

NA FINISH

BREAK SHARP EDGES
MAX. XX MIN. XX

OUTSTANDING ECN

Q.A. CATEGORY A-3		DATE
DRAWN BY	Ed Koropsak	10/1/98
CHECKED BY		
DESIGN APPROVAL		
ENGINEER APPROVAL	R.MICHNOFF	10/1/98
SUPVR. APPROVAL		
NEXT ASSEMBLY		

BROOKHAVEN NATIONAL LABORATORY
UPTON, N.Y. 11973

RHIC CONTROLS WIRING DIAGRAM

BLDG. 1004B, CFE-4B-PS1

bi4-qd2-ps/bi4-qf3-ps

SIZE D | DRAWING NUMBER 94028529 | REV. A

MATERIAL: ——— SCALE: NA WEIGHT: – SHEET 62 OF x

*AUTOCAD

REV.	ZONE	ECN NO.	DATE	BY	CKR	APP.

ACS, BNL 8/27/99 1:20 PM 8529_63.dwg

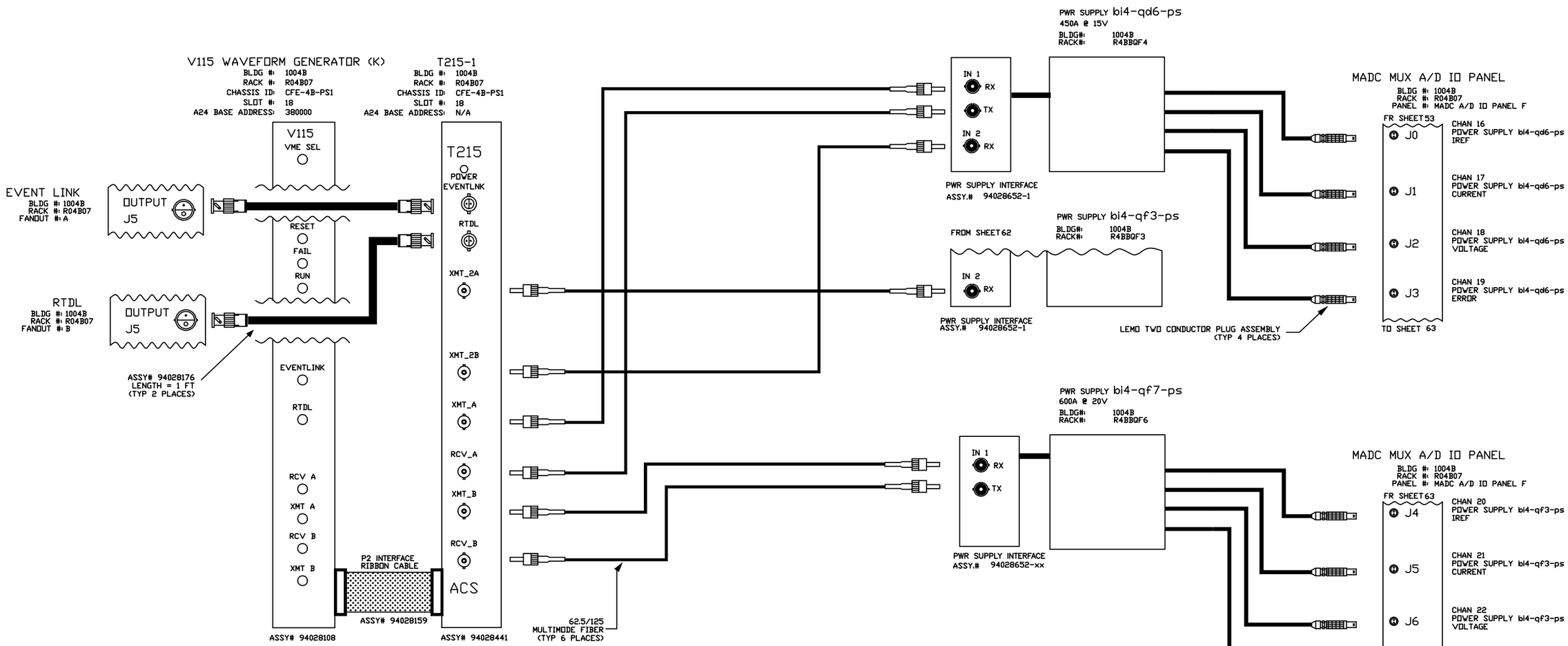

V115 JUMPER LIST
JP3=IN JP4=IN JP1=OUT JP2=OUT
A24 BASE ADDRESS JB1-A23=IN JB1-A22=IN JB1-A21=OUT JB1-A20=OUT JB1-A19=OUT JB1-A18=IN

-3	-2	-1	REF DESIGNATOR	ITEM NO.	DESCRIPTION	MAT'L DWG NO.,BNL NO.
QTY REQD						

INTERPRET IN GENERAL ACCORDANCE WITH ASME Y14.24M-1989

UNLESS OTHERWISE SPECIFIED DIMENSIONS ARE IN INCHES

DECIMAL TOLERANCES
.X ±.030
.XX ±.015
.XXX ±.005
ANGULAR TOLERANCE
± .5°

NA FINISH

BREAK SHARP EDGES
MAX. XX MIN. XX

OUTSTANDING ECN

Q.A. CATEGORY A-3		DATE
DRAWN BY	Ed Koropsak	10/1/98
CHECKED BY		
DESIGN APPROVAL		
ENGINEER APPROVAL	R.MICHNOFF	10/1/98
SUPVR. APPROVAL		
NEXT ASSEMBLY		

BROOKHAVEN NATIONAL LABORATORY
UPTON, N.Y. 11973

RHIC CONTROLS WIRING DIAGRAM

BLDG. 1004B, CFE-4B-PS1

bi4-qd6-ps/bi4-qf7-ps

SIZE D | DRAWING NUMBER 94028529 | REV. A

MATERIAL: ——— SCALE: NA WEIGHT: – SHEET 63 OF x

1 *AUTOCAD

REV.	ZONE	ECN NO.	DATE	BY	CKR	APP.

BNL, BNL 8/17/00 1:51 PM 8529_64.dwg

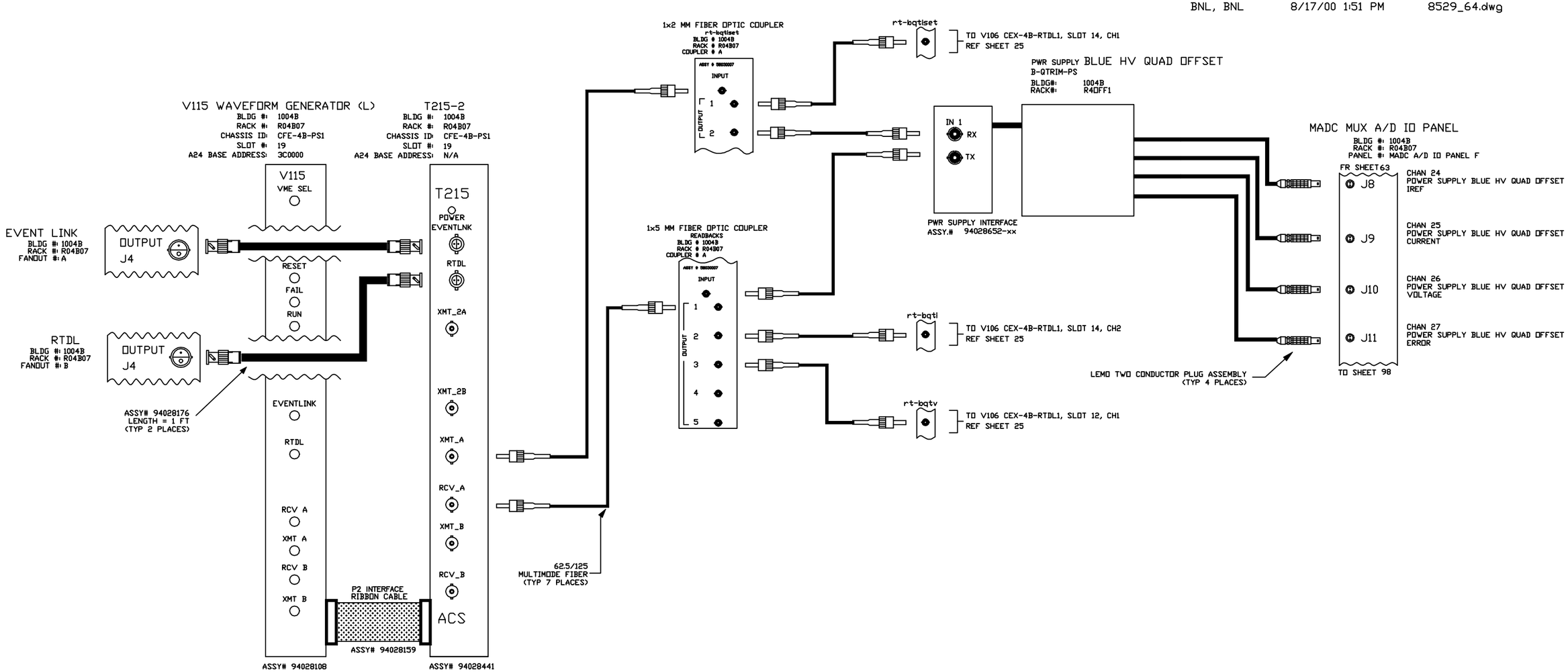

V115 JUMPER LIST
JP3=IN JP4=IN JP1=OUT JP2=OUT
A24 BASE ADDRESS JB1-A23=IN JB1-A22=IN JB1-A21=OUT JB1-A20=OUT JB1-A19=OUT JB1-A18=OUT

-3	-2	-1	REF DESIGNATOR	ITEM NO.	DESCRIPTION	MAT'L DWG NO./BNL NO.
QTY REQD						

INTERPRET IN GENERAL ACCORDANCE WITH ASME Y14.24M-1989

UNLESS OTHERWISE SPECIFIED DIMENSIONS ARE IN INCHES

DECIMAL TOLERANCES
.X ±.030
.XX ±.015
.XXX ±.005
ANGULAR TOLERANCE
± .5°

NA FINISH

BREAK SHARP EDGES
MAX. XX MIN. XX

OUTSTANDING ECN

Q.A. CATEGORY A-3		DATE
DRAWN BY	Ed Koropsak	10/7/98
CHECKED BY		
DESIGN APPROVAL		
ENGINEER APPROVAL	R.MICHNOFF	10/7/98
SUPVR. APPROVAL		

NEXT ASSEMBLY

BROOKHAVEN NATIONAL LABORATORY
UPTON, N.Y. 11973

RHIC CONTROLS WIRING DIAGRAM
BLDG. 1004B, CFE-4B-PS1
BLUE HV QUAD OFFSET

SIZE D
DRAWING NUMBER 94028529
REV. A

MATERIAL: ——— SCALE: NA WEIGHT: — SHEET 64

*AUTOCAD

REV.	ZONE	ECN NO.	DATE	BY	CKR	APP.

Phil Pape, Controls Division 9/13/2002 11:29 AM 8529_65.dwg

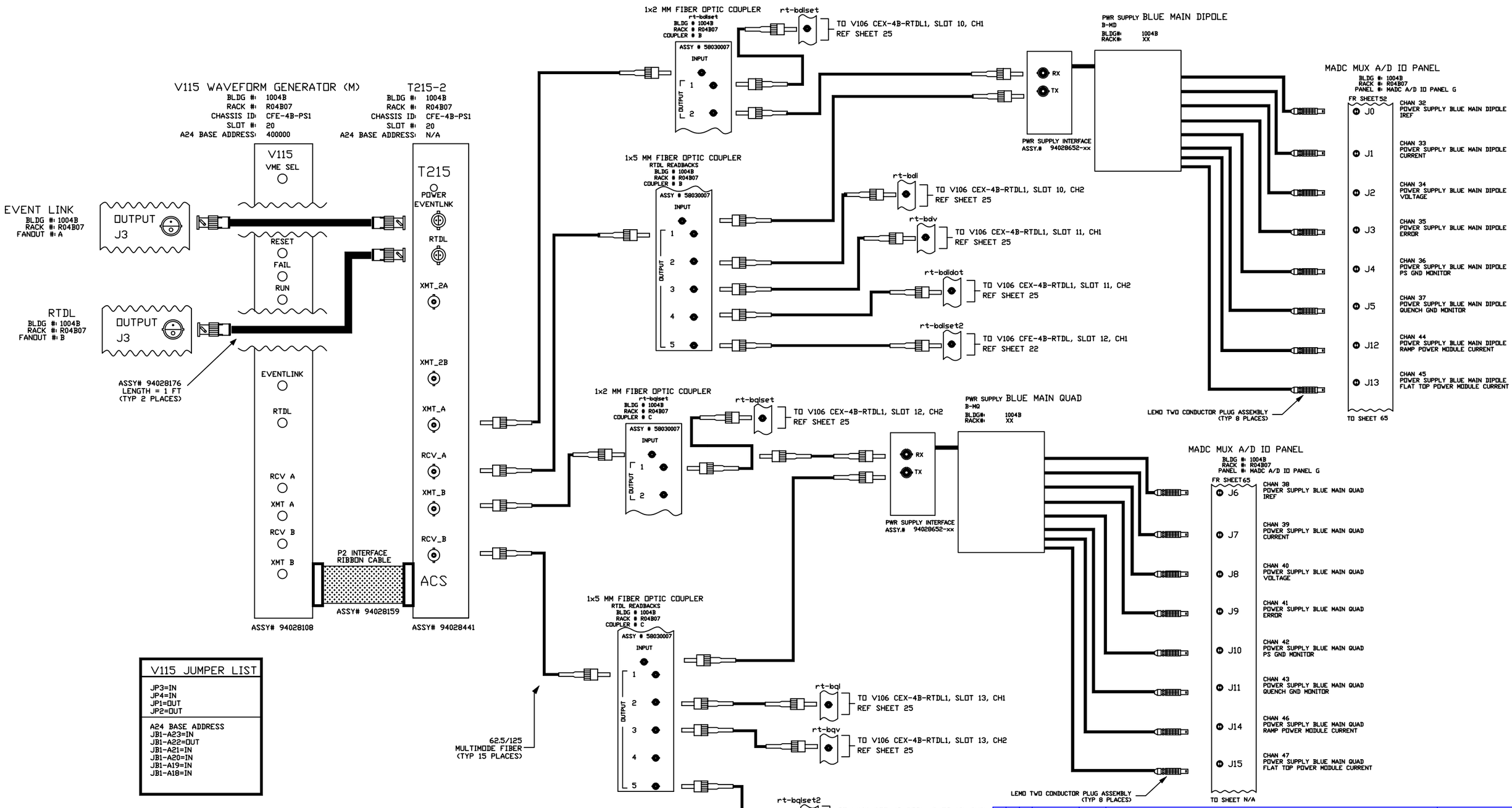

V115 JUMPER LIST

JP3=IN
JP4=IN
JP1=OUT
JP2=OUT

A24 BASE ADDRESS
JB1-A23=IN
JB1-A22=OUT
JB1-A21=IN
JB1-A20=IN
JB1-A19=IN
JB1-A18=IN

-3	-2	-1	REF DESIGNATOR	ITEM NO.	DESCRIPTION	MAT'L DWG NO./BNL NO.
QTY REQD						

INTERPRET IN GENERAL ACCORDANCE WITH ASME Y14.24M-1989

UNLESS OTHERWISE SPECIFIED DIMENSIONS ARE IN INCHES

DECIMAL TOLERANCES
X ±.030
.XX ±.015
.XXX ±.005
ANGULAR TOLERANCE
± .5°

FINISH NA

BREAK SHARP EDGES
MAX. XX MIN. XX

OUTSTANDING ECN

Q.A. CATEGORY	A-3	DATE
DRAWN BY	pape	9/13/2002
CHECKED BY		
DESIGN APPROVAL		
ENGINEER APPROVAL	R.MICHNOFF	10/7/98
SUPVR. APPROVAL		

NEXT ASSEMBLY

BROOKHAVEN NATIONAL LABORATORY
UPTON, N.Y. 11973

RHIC CONTROLS WIRING DIAGRAM
BLDG. 1004B, CFE-4B-PS1
BLUE MAIN DIPOLE/MAIN QUAD

SIZE D
DRAWING NUMBER 94028529
REV. A

MATERIAL: ——— SCALE: NA WEIGHT: – SHEET 65 OF x

*AUTOCAD

REV.	ZONE	ECN NO.	DATE	BY	CKR	APP.

C-A, BNL 3/20/01 2:06 PM 8529_66.dwg

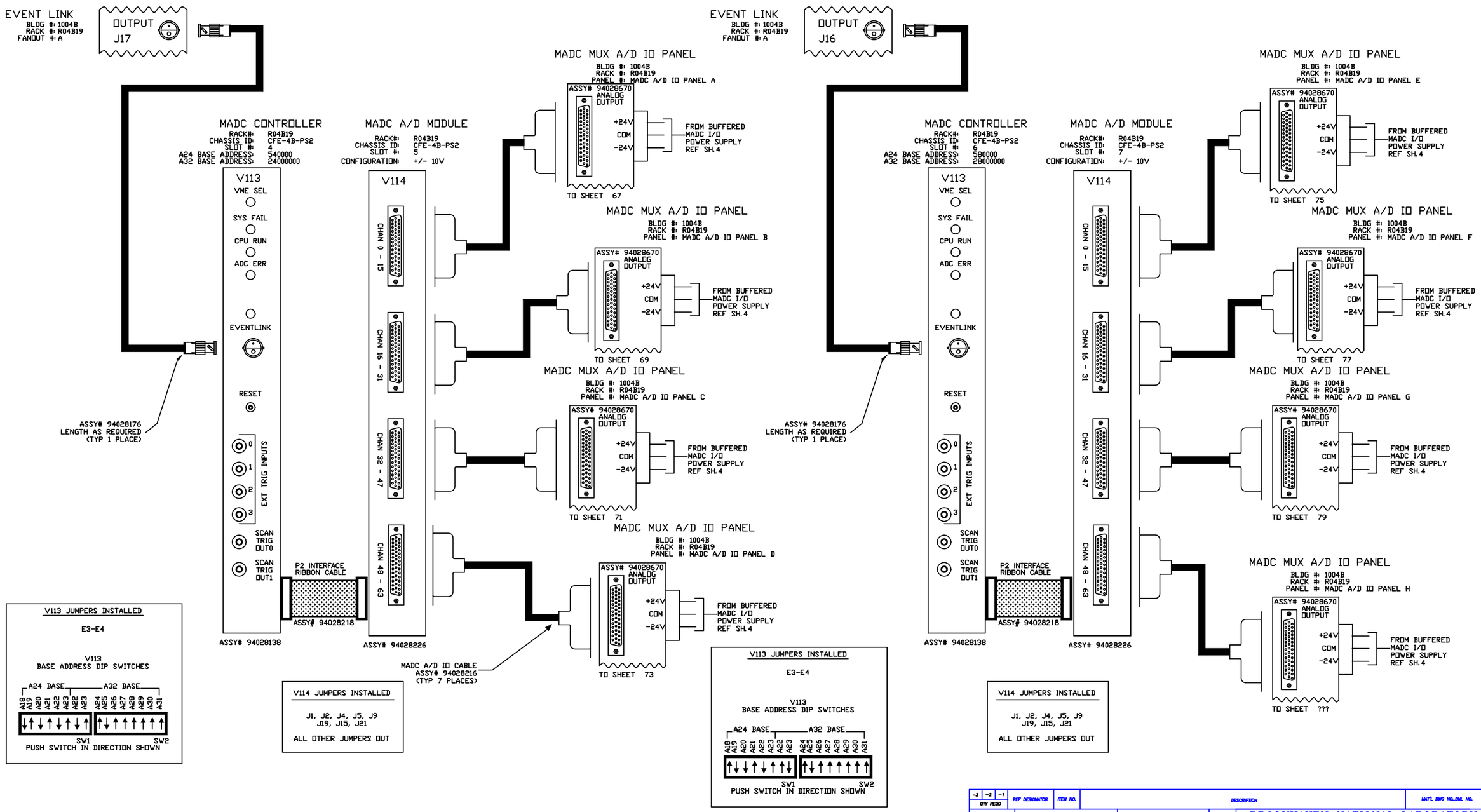

-3	-2	-1	REF DESIGNATOR	ITEM NO.	DESCRIPTION	MAT'L DWG NO./BNL NO.
QTY REQD						

INTERPRET IN GENERAL ACCORDANCE WITH ASME Y14.24M-1989	Q.A. CATEGORY A-3	DATE	BROOKHAVEN NATIONAL LABORATORY UPTON, N.Y. 11973
UNLESS OTHERWISE SPECIFIED DIMENSIONS ARE IN INCHES	DRAWN BY Ed Koropsak	10/8/98	RHIC CONTROLS WIRING DIAGRAM
DECIMAL TOLERANCES .X ±.030 .XX ±.015 .XXX ±.005 ANGULAR TOLERANCE ± .5°	CHECKED BY		1004B, VME CHASSIS CFE-4B-PS2
	DESIGN APPROVAL		MADC SYSTEM
	ENGINEER APPROVAL R. MICHNOFF	10/8/98	
	SUPVR. APPROVAL		SIZE D — 94028529 — REV. A
NA FINISH — BREAK SHARP EDGES MAX. XX MIN. XX	NEXT ASSEMBLY		DRAWING NUMBER
OUTSTANDING ECN			MATERIAL: ——— SCALE: FULL WEIGHT: – SHEET 66

*AUTOCAD

REV.	ZONE	ECN NO.	DATE	BY	CKR	APP.

ACS, BNL 8/27/99 1:25 PM 8529_67.dwg

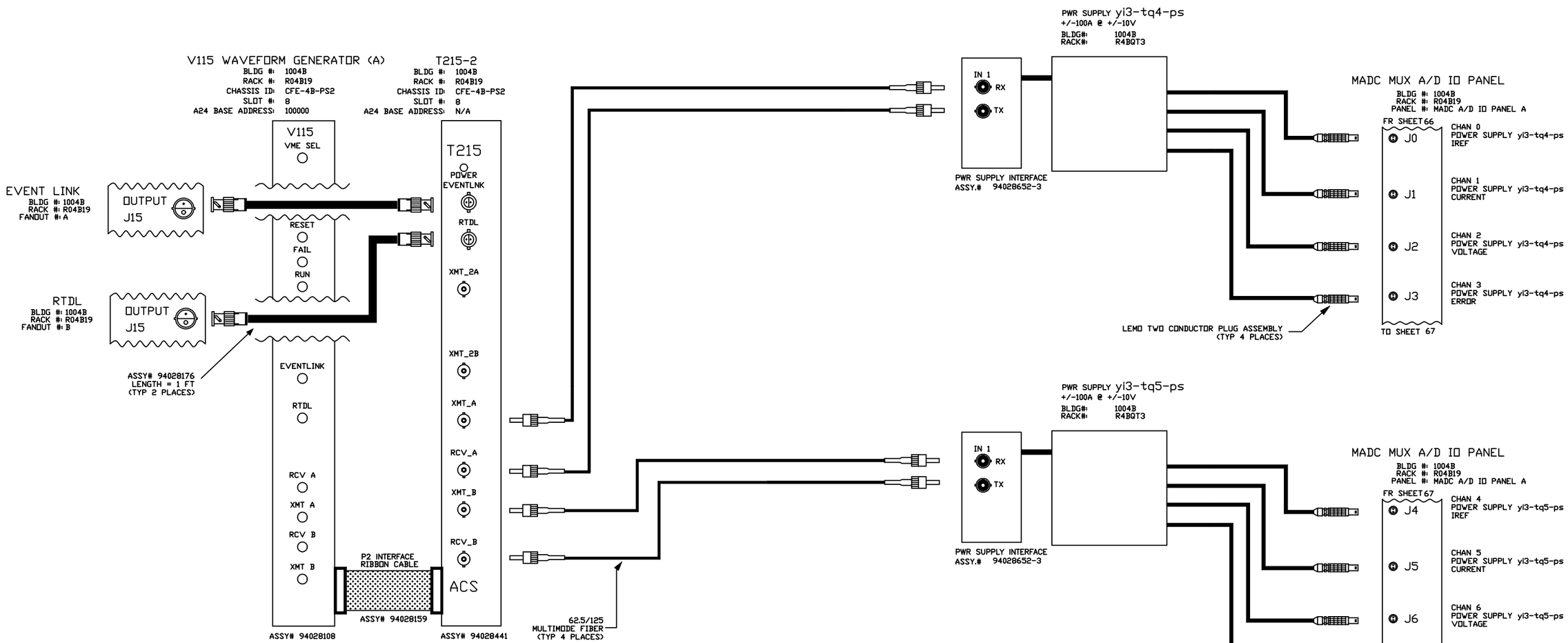

V115 JUMPER LIST
JP3=IN JP4=IN JP1=OUT JP2=OUT
A24 BASE ADDRESS JB1-A23=IN JB1-A22=IN JB1-A21=IN JB1-A20=OUT JB1-A19=IN JB1-A18=IN

-3	-2	-1	REF DESIGNATOR	ITEM NO.	DESCRIPTION	MAT'L DWG NO./BNL NO.
QTY REQD						

INTERPRET IN GENERAL ACCORDANCE WITH ASME Y14.24M-1989

UNLESS OTHERWISE SPECIFIED DIMENSIONS ARE IN INCHES

DECIMAL TOLERANCES
.X ±.030
.XX ±.015
.XXX ±.005
ANGULAR TOLERANCE
± .5°

NA FINISH

BREAK SHARP EDGES
MAX. XX MIN. XX

OUTSTANDING ECN

Q.A. CATEGORY A-3		DATE
DRAWN BY	Ed Koropsak	10/8/98
CHECKED BY		
DESIGN APPROVAL		
ENGINEER APPROVAL	R.MICHNOFF	10/8/98
SUPVR. APPROVAL		

NEXT ASSEMBLY

BROOKHAVEN NATIONAL LABORATORY
UPTON, N.Y. 11973

RHIC CONTROLS WIRING DIAGRAM

BLDG. 1004B, CFE-4B-PS2

yi3-tq4-ps/yi3-tq5-ps

SIZE D | 94028529 | REV. A

DRAWING NUMBER

MATERIAL: ——— SCALE: NA WEIGHT: – SHEET 67 OF x

*AUTOCAD

ACS, BNL 8/27/99 1:26 PM 8529_68.dwg

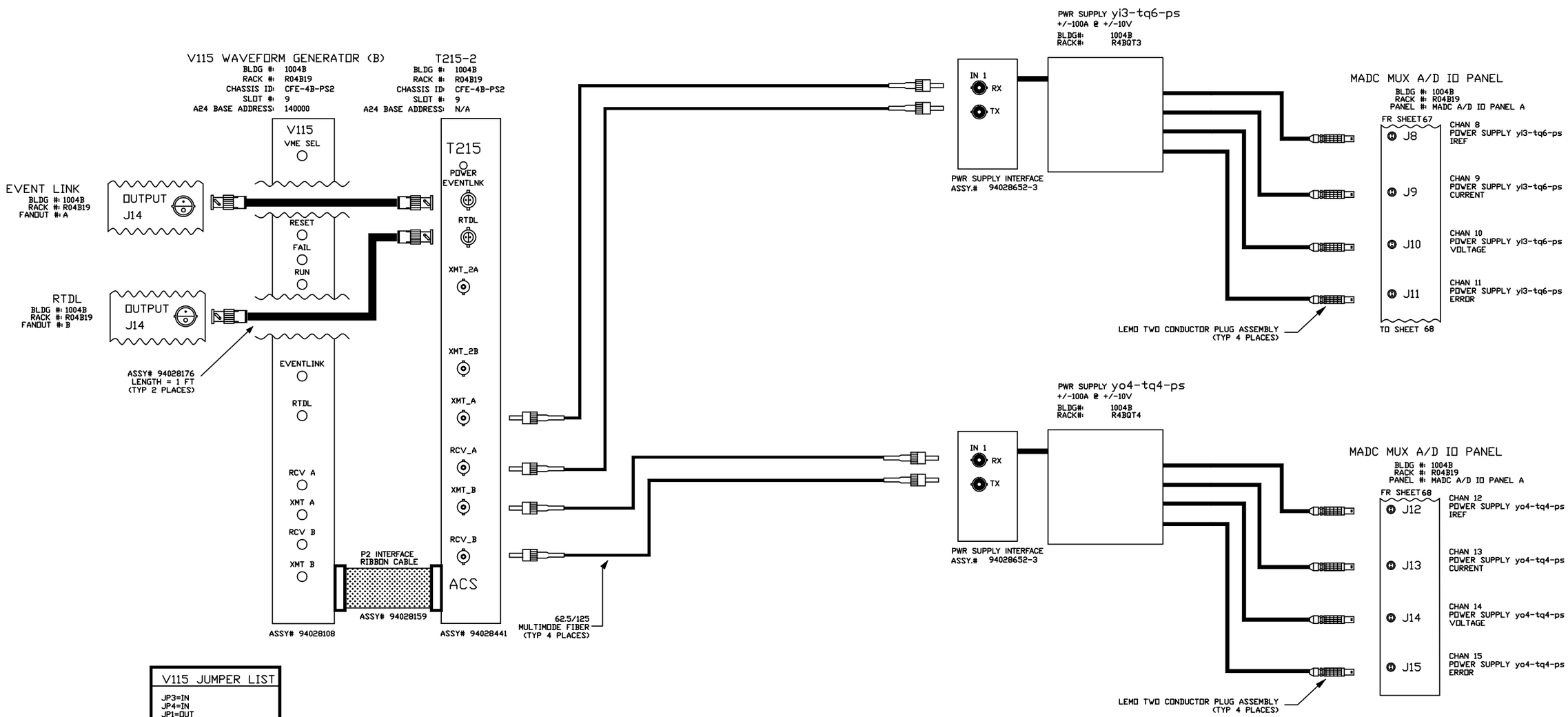

V115 JUMPER LIST
JP3=IN JP4=IN JP1=OUT JP2=OUT
A24 BASE ADDRESS JB1-A23=IN JB1-A22=IN JB1-A21=IN JB1-A20=OUT JB1-A19=IN JB1-A18=OUT

-3	-2	-1	REF DESIGNATOR	ITEM NO.	DESCRIPTION	MAT'L. DWG NO.,BNL NO.
QTY REQD						

INTERPRET IN GENERAL ACCORDANCE WITH ASME Y14.24M-1989

UNLESS OTHERWISE SPECIFIED DIMENSIONS ARE IN INCHES

DECIMAL TOLERANCES .X ±.030 .XX ±.015 .XXX ±.005 ANGULAR TOLERANCE ± .5°

FINISH NA BREAK SHARP EDGES MAX. XX MIN. XX

OUTSTANDING ECN

Q.A. CATEGORY A-3		DATE
DRAWN BY	Ed Koropsak	10/8/98
CHECKED BY		
DESIGN APPROVAL		
ENGINEER APPROVAL	R.MICHNOFF	10/8/98
SUPVR. APPROVAL		
NEXT ASSEMBLY		

BROOKHAVEN NATIONAL LABORATORY
UPTON, N.Y. 11973

RHIC CONTROLS WIRING DIAGRAM

BLDG. 1004B, CFE-4B-PS2

yi3-tq6-ps/yo4-tq4-ps

SIZE D — DRAWING NUMBER 94028529 — REV. A

MATERIAL: ——— SCALE: NA WEIGHT: – SHEET 68 OF x

*AUTOCAD

REV.	ZONE	ECN NO.	DATE	BY	CKR	APP.

ACS, BNL 8/27/99 1:27 PM 8529_69.dwg

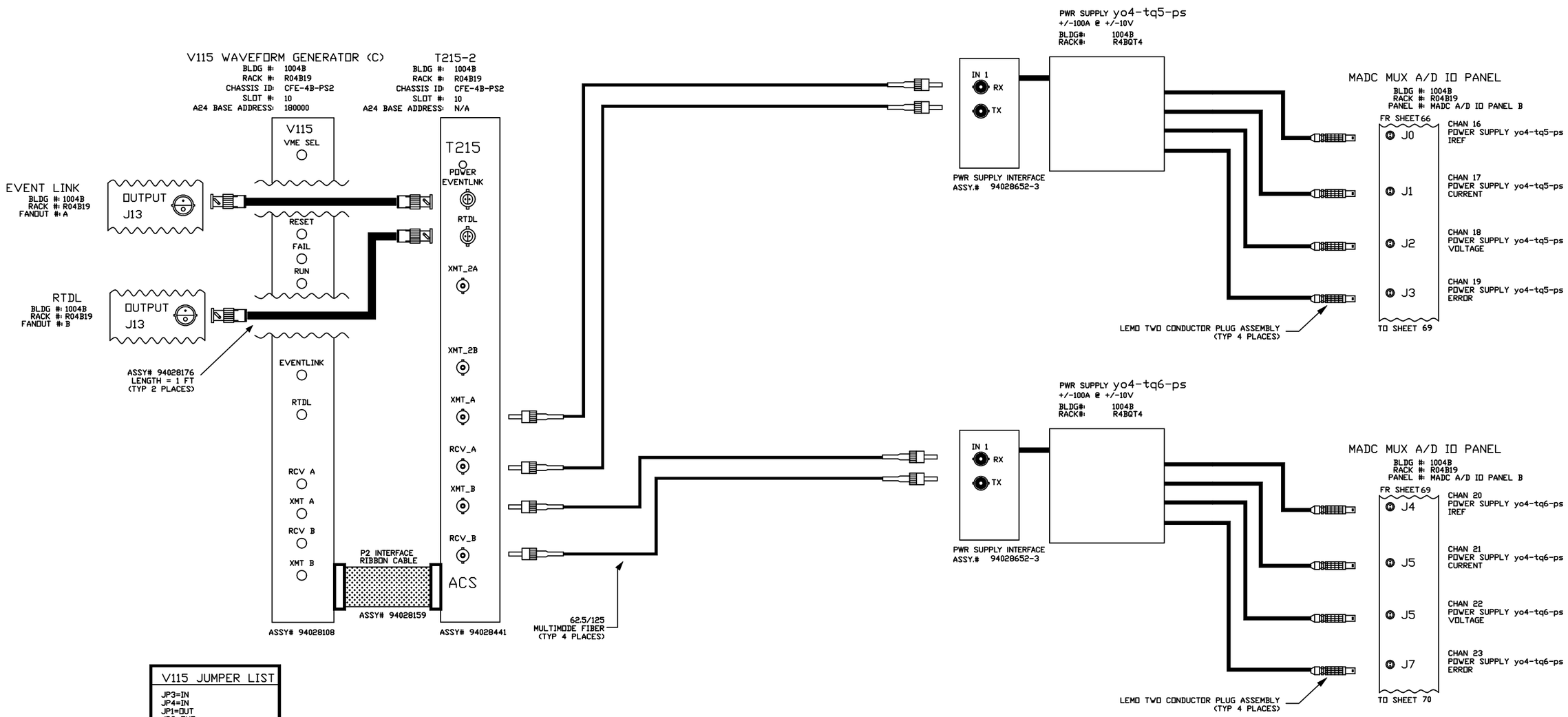

V115 JUMPER LIST
JP3=IN JP4=IN JP1=OUT JP2=OUT
A24 BASE ADDRESS JB1-A23=IN JB1-A22=IN JB1-A21=IN JB1-A20=OUT JB1-A19=OUT JB1-A18=IN

-3	-2	-1	REF DESIGNATOR	ITEM NO.	DESCRIPTION	MAT'L. DWG NO.,BNL NO.
QTY REQD						

INTERPRET IN GENERAL ACCORDANCE WITH ASME Y14.24M-1989

UNLESS OTHERWISE SPECIFIED DIMENSIONS ARE IN INCHES

DECIMAL TOLERANCES
.X ±.030
.XX ±.015
.XXX ±.005
ANGULAR TOLERANCE
± .5°

FINISH: NA

BREAK SHARP EDGES
MAX. XX MIN. XX

OUTSTANDING ECN

Q.A. CATEGORY A-3		DATE
DRAWN BY	Ed Koropsak	10/8/98
CHECKED BY		
DESIGN APPROVAL		
ENGINEER APPROVAL	R.MICHNOFF	10/8/98
SUPVR. APPROVAL		
NEXT ASSEMBLY		

BROOKHAVEN NATIONAL LABORATORY
UPTON, N.Y. 11973

RHIC CONTROLS WIRING DIAGRAM
BLDG. 1004B, CFE-4B-PS2
yo4-tq5-ps/yo4-tq6-ps

SIZE: D
DRAWING NUMBER: 94028529
REV.: A

MATERIAL: ——— SCALE: NA WEIGHT: – SHEET 69 OF x

*AUTOCAD

ACS, BNL 8/27/99 1:29 PM 8529_70.dwg

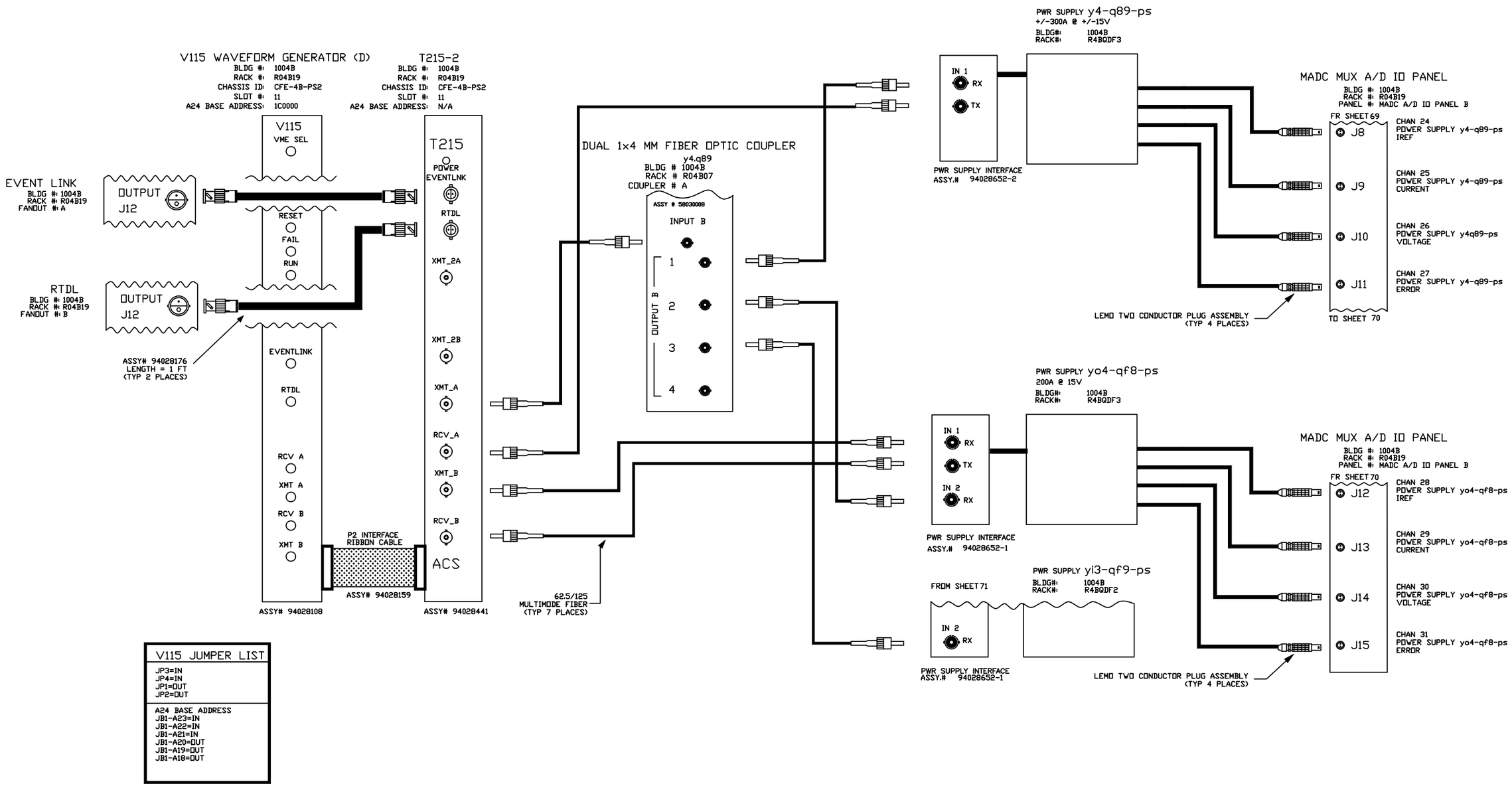

V115 JUMPER LIST
JP3=IN JP4=IN JP1=OUT JP2=OUT
A24 BASE ADDRESS JB1-A23=IN JB1-A22=IN JB1-A21=IN JB1-A20=OUT JB1-A19=OUT JB1-A18=OUT

-3	-2	-1	REF DESIGNATOR	ITEM NO.	DESCRIPTION	MAT'L. DWG NO./BNL NO.
QTY REQD						

INTERPRET IN GENERAL ACCORDANCE WITH ASME Y14.24M-1989

UNLESS OTHERWISE SPECIFIED DIMENSIONS ARE IN INCHES
DECIMAL TOLERANCES
.X ±.030
.XX ±.015
.XXX ±.005
ANGULAR TOLERANCE ± .5°

NA FINISH — BREAK SHARP EDGES MAX. XX MIN. XX

OUTSTANDING ECN

Q.A. CATEGORY A-3		DATE
DRAWN BY	Ed Koropsak	10/8/98
CHECKED BY		
DESIGN APPROVAL		
ENGINEER APPROVAL	R.MICHNOFF	10/8/98
SUPVR. APPROVAL		
NEXT ASSEMBLY		

BROOKHAVEN NATIONAL LABORATORY
UPTON, N.Y. 11973

RHIC CONTROLS WIRING DIAGRAM
BLDG. 1004B, CFE-4B-PS2
y4-q89-ps/yo4-qf8-ps

SIZE D — 94028529 — REV. A
DRAWING NUMBER

MATERIAL: ——— SCALE: NA WEIGHT: – SHEET 70 OF x

*AUTOCAD

REV.	ZONE	ECN NO.	DATE	BY	CKR	APP.

ACS, BNL 8/27/99 1:30 PM 8529_71.dwg

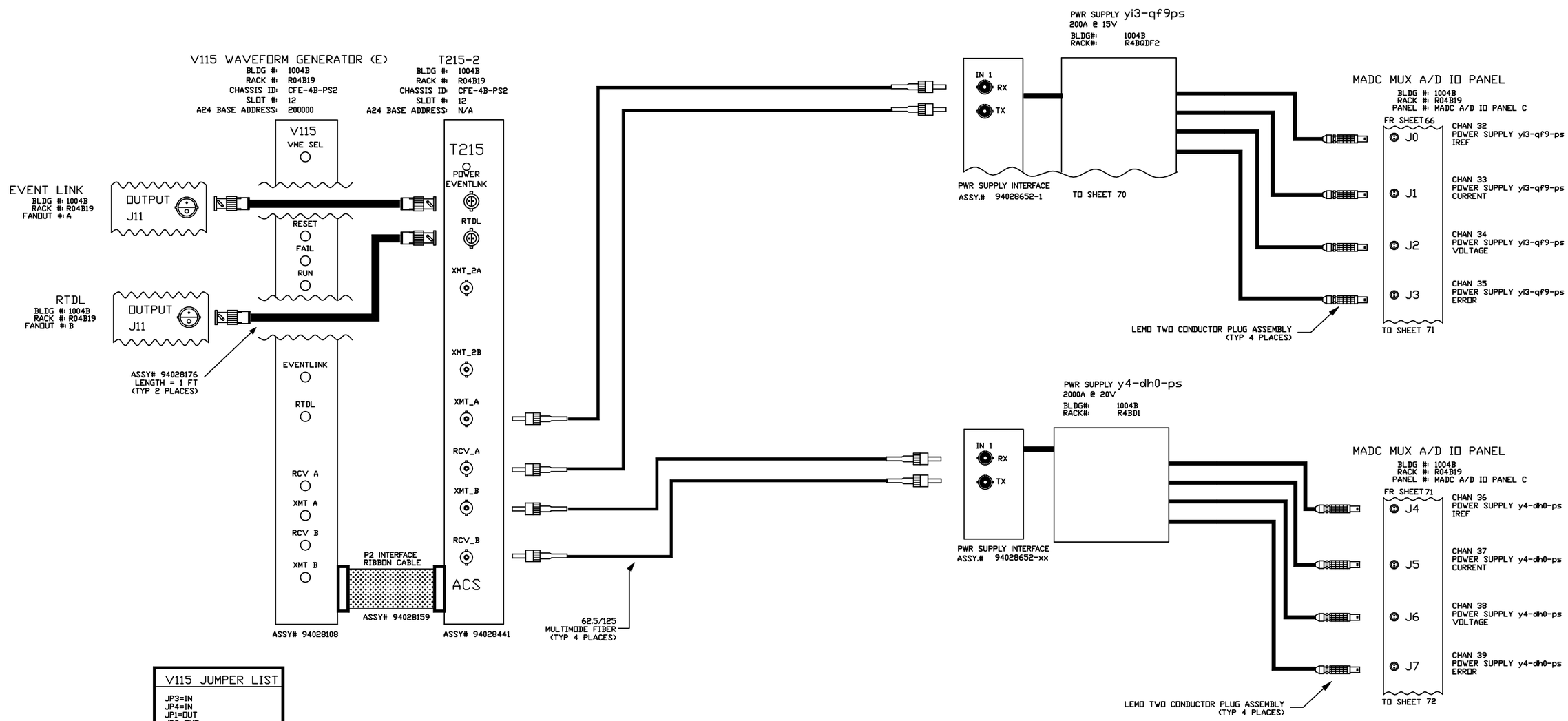

V115 JUMPER LIST
JP3=IN JP4=IN JP1=OUT JP2=OUT
A24 BASE ADDRESS JB1-A23=IN JB1-A22=IN JB1-A21=OUT JB1-A20=IN JB1-A19=IN JB1-A18=IN

-3	-2	-1	REF DESIGNATOR	ITEM NO.	DESCRIPTION	MAT'L DWG NO./BNL NO.
QTY REQD						

INTERPRET IN GENERAL ACCORDANCE WITH ASME Y14.24M-1989	Q.A. CATEGORY A-3	DATE	BROOKHAVEN NATIONAL LABORATORY UPTON, N.Y. 11973
UNLESS OTHERWISE SPECIFIED DIMENSIONS ARE IN INCHES	DRAWN BY Ed Koropsak	10/8/98	RHIC CONTROLS WIRING DIAGRAM
DECIMAL TOLERANCES X ±.030 .XX ±.015 .XXX ±.005 ANGULAR TOLERANCE ± .5°	CHECKED BY		BLDG. 1004B, CFE-4B-PS2
	DESIGN APPROVAL		yi3-qf9-ps/y4-dh0-ps
	ENGINEER APPROVAL R.MICHNOFF	10/8/98	
	SUPVR. APPROVAL		SIZE D — 94028529 — REV. A
NA FINISH	BREAK SHARP EDGES MAX. XX MIN. XX	NEXT ASSEMBLY	DRAWING NUMBER
OUTSTANDING ECN			MATERIAL: ——— SCALE: NA WEIGHT: – SHEET 71 OF x

*AUTOCAD

REV.	ZONE	ECN NO.	DATE	BY	CKR	APP.

ACS, BNL 10/26/98 2:59 PM 8529_72.dwg

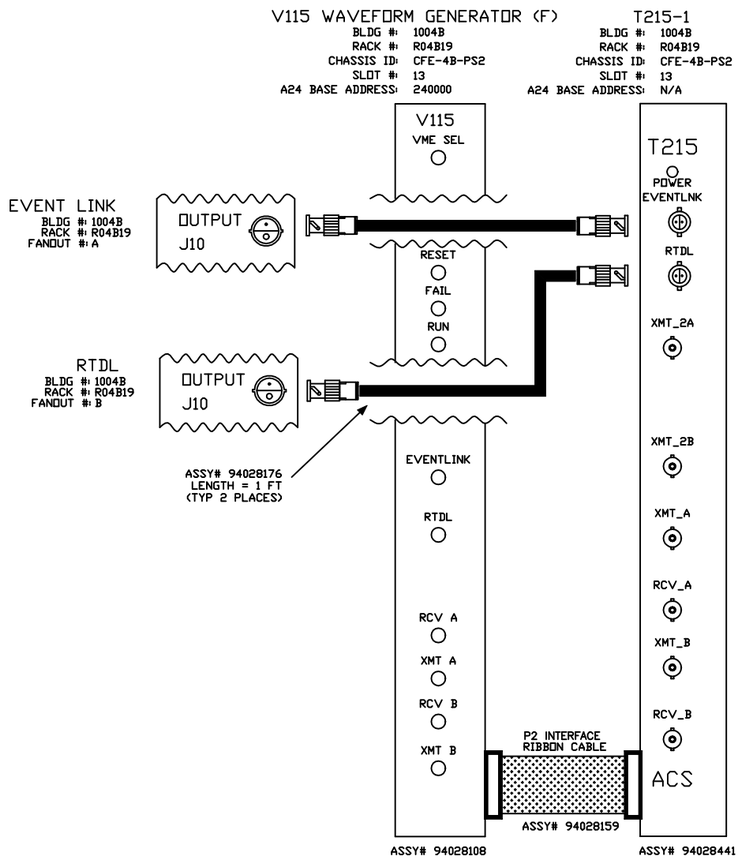

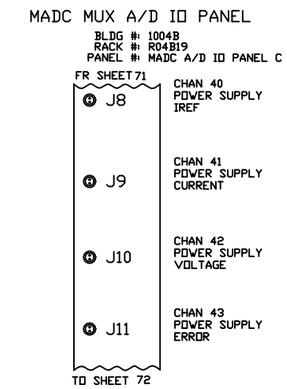

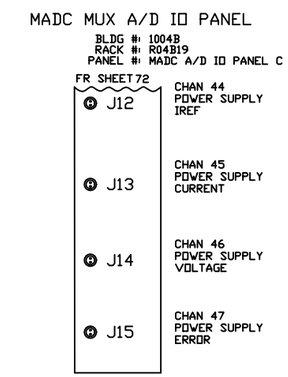

V115 JUMPER LIST
JP3=IN JP4=IN JP1=OUT JP2=OUT
A24 BASE ADDRESS JB1-A23=IN JB1-A22=IN JB1-A21=OUT JB1-A20=IN JB1-A19=IN JB1-A18=OUT

-3	-2	-1	REF DESIGNATOR	ITEM NO.	DESCRIPTION	MAT'L. DWG NO.,BNL NO.
QTY REQD						

INTERPRET IN GENERAL ACCORDANCE WITH ASME Y14.24M-1989

UNLESS OTHERWISE SPECIFIED DIMENSIONS ARE IN INCHES

DECIMAL TOLERANCES
.X ±.030
.XX ±.015
.XXX ±.005
ANGULAR TOLERANCE ± .5°

OUTSTANDING ECN

NA FINISH

BREAK SHARP EDGES MAX. XX MIN. XX

Q.A. CATEGORY A-3		DATE
DRAWN BY	Ed Koropsak	10/8/98
CHECKED BY		
DESIGN APPROVAL		
ENGINEER APPROVAL	R.MICHNOFF	10/8/98
SUPVR. APPROVAL		
NEXT ASSEMBLY		

BROOKHAVEN NATIONAL LABORATORY
UPTON, N.Y. 11973

RHIC CONTROLS WIRING DIAGRAM
BLDG. 1004B, CFE-4B-PS2

SIZE D — DRAWING NUMBER 94028529 — REV. A

MATERIAL: ——— SCALE: NA WEIGHT: – SHEET 72 OF x

*AUTOCAD

REV.	ZONE	ECN NO.	DATE	BY	CKR	APP.

ACS, BNL 8/27/99 1:31 PM 8529_73.dwg

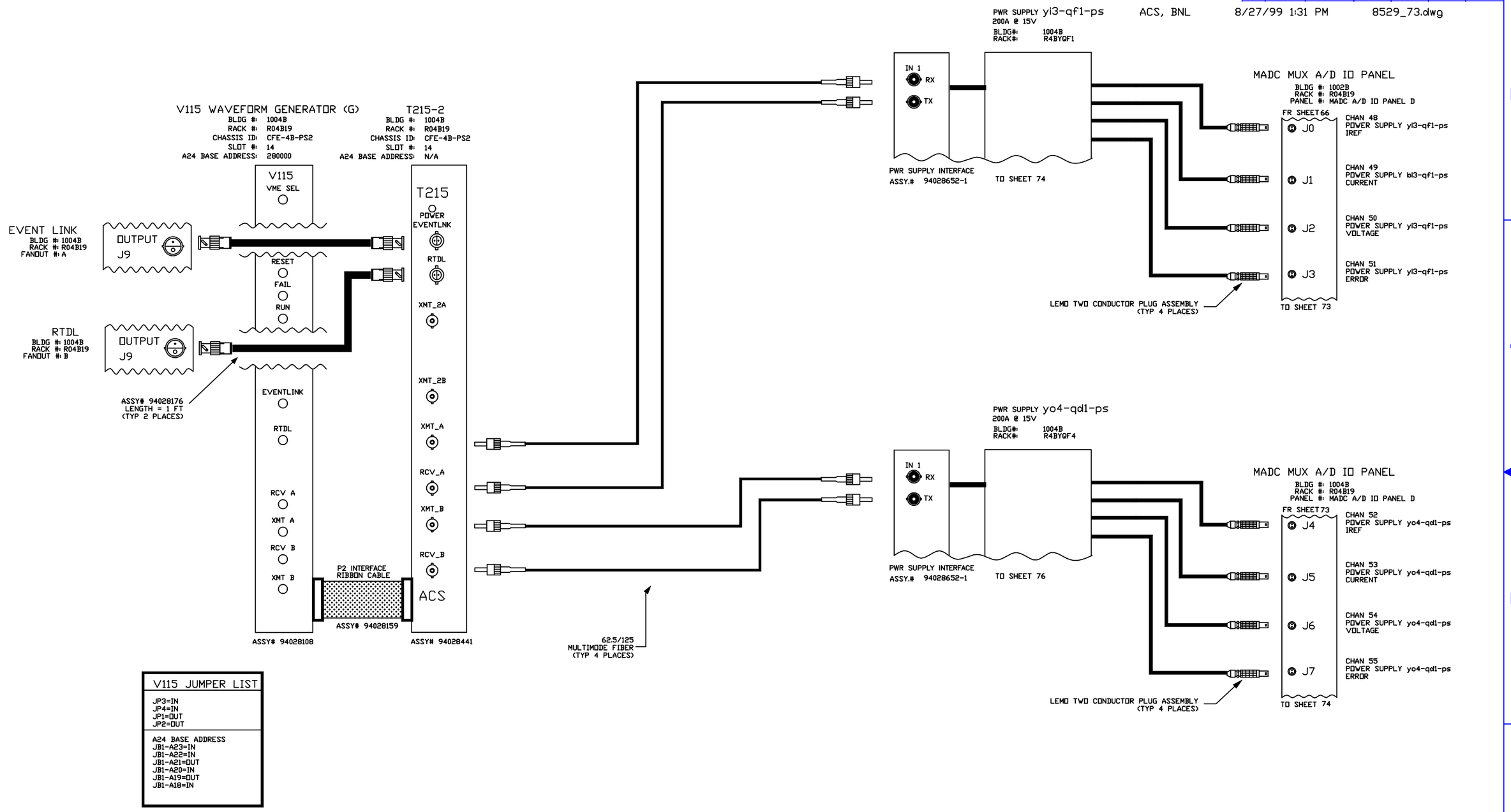

V115 JUMPER LIST
JP3=IN JP4=IN JP1=OUT JP2=OUT
A24 BASE ADDRESS JB1-A23=IN JB1-A22=IN JB1-A21=OUT JB1-A20=IN JB1-A19=OUT JB1-A18=IN

-3	-2	-1	REF DESIGNATOR	ITEM NO.	DESCRIPTION	MAT'L DWG NO./BNL NO.
QTY REQD						

INTERPRET IN GENERAL ACCORDANCE WITH ASME Y14.24M-1989

UNLESS OTHERWISE SPECIFIED DIMENSIONS ARE IN INCHES

DECIMAL TOLERANCES
.X ±.030
.XX ±.015
.XXX ±.005
ANGULAR TOLERANCE
± .5°

FINISH: NA

BREAK SHARP EDGES
MAX. XX MIN. XX

OUTSTANDING ECN

Q.A. CATEGORY A-3		DATE
DRAWN BY	Ed Koropsak	10/8/98
CHECKED BY		
DESIGN APPROVAL		
ENGINEER APPROVAL	R.MICHNOFF	10/8/98
SUPVR. APPROVAL		

NEXT ASSEMBLY

BROOKHAVEN NATIONAL LABORATORY
UPTON, N.Y. 11973

RHIC CONTROLS WIRING DIAGRAM

BLDG. 1004B, CFE-4B-PS2

yi3-qf1-ps/yo4-qd1-ps

SIZE D | DRAWING NUMBER 94028529 | REV. A

MATERIAL: ——— SCALE: NA WEIGHT: – SHEET 73 OF x

1 *AUTOCAD

REV.	ZONE	ECN NO.	DATE	BY	CKR	APP.

ACS, BNL 8/27/99 1:32 PM 8529_74.dwg

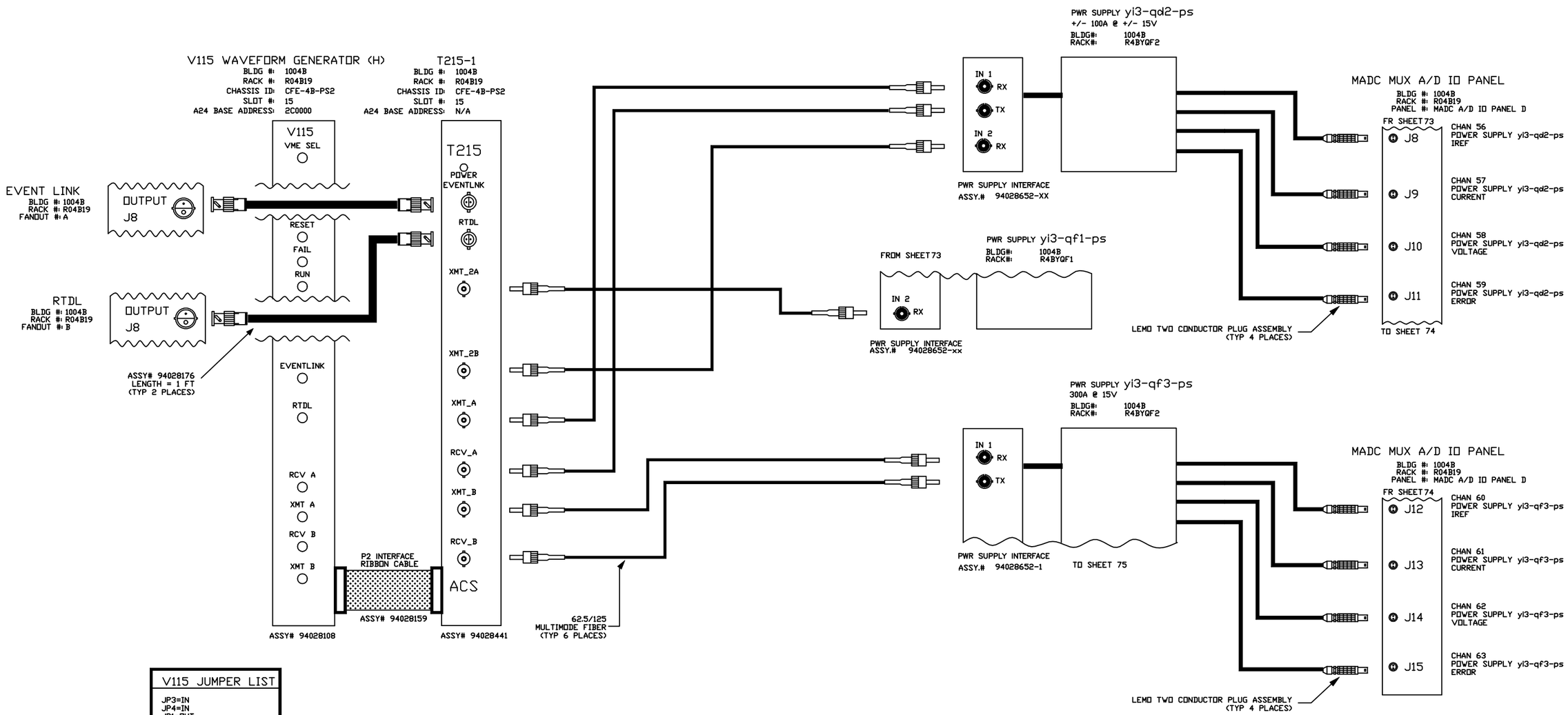

V115 JUMPER LIST
JP3=IN JP4=IN JP1=OUT JP2=OUT
A24 BASE ADDRESS JB1-A23=IN JB1-A22=IN JB1-A21=OUT JB1-A20=IN JB1-A19=OUT JB1-A18=OUT

-3	-2	-1	REF DESIGNATOR	ITEM NO.	DESCRIPTION	MAT'L DWG NO./INL NO.
QTY REQD						

INTERPRET IN GENERAL ACCORDANCE WITH ASME Y14.24M-1989

UNLESS OTHERWISE SPECIFIED DIMENSIONS ARE IN INCHES

DECIMAL TOLERANCES
.X ±.030
.XX ±.015
.XXX ±.005
ANGULAR TOLERANCE
± .5°

NA FINISH

BREAK SHARP EDGES
MAX. XX MIN. XX

OUTSTANDING ECN

Q.A. CATEGORY A-3		DATE
DRAWN BY	Ed Koropsak	10/8/98
CHECKED BY		
DESIGN APPROVAL		
ENGINEER APPROVAL	R.MICHNOFF	10/8/98
SUPVR. APPROVAL		

NEXT ASSEMBLY

BROOKHAVEN NATIONAL LABORATORY
UPTON, N.Y. 11973

RHIC CONTROLS WIRING DIAGRAM

BLDG. 1004B, CFE-4B-PS2

yi3-qd2-ps/yi3-qf3-ps

SIZE D | DRAWING NUMBER 94028529 | REV. A

MATERIAL: ——— SCALE: NA WEIGHT: – SHEET 74 OF x

*AUTOCAD

REV.	ZONE	ECN NO.	DATE	BY	CKR	APP.

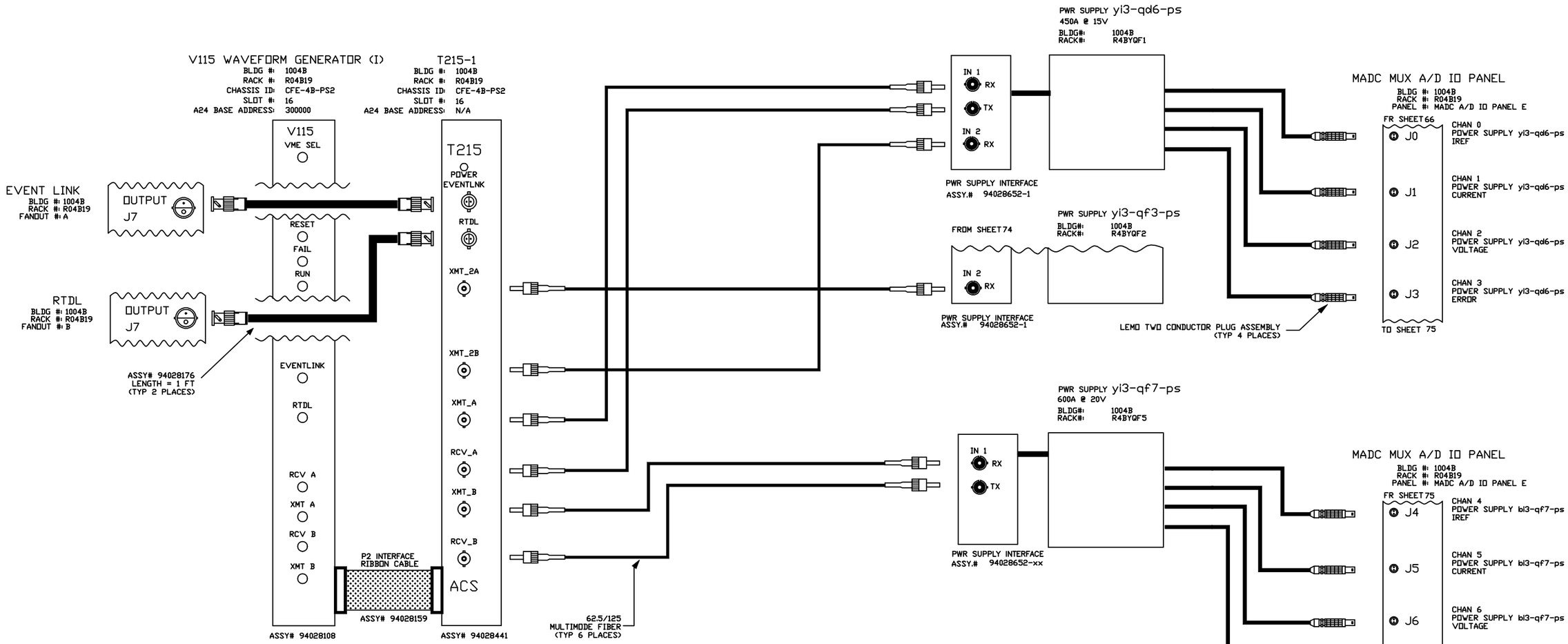

V115 JUMPER LIST
JP3=IN JP4=IN JP1=OUT JP2=OUT
A24 BASE ADDRESS JB1-A23=IN JB1-A22=IN JB1-A21=OUT JB1-A20=OUT JB1-A19=IN JB1-A18=IN

-3	-2	-1	REF DESIGNATOR	ITEM NO.	DESCRIPTION	MAT'L DWG NO.,BNL NO.
QTY REQD						

INTERPRET IN GENERAL ACCORDANCE WITH ASME Y14.24M-1989

UNLESS OTHERWISE SPECIFIED DIMENSIONS ARE IN INCHES

DECIMAL TOLERANCES
.X ±.030
.XX ±.015
.XXX ±.005
ANGULAR TOLERANCE
± .5°

NA FINISH

BREAK SHARP EDGES
MAX. XX MIN. XX

OUTSTANDING ECN

Q.A. CATEGORY A-3		DATE
DRAWN BY	Ed Koropsak	10/8/98
CHECKED BY		
DESIGN APPROVAL		
ENGINEER APPROVAL	R.MICHNOFF	10/8/98
SUPVR. APPROVAL		
NEXT ASSEMBLY		

BROOKHAVEN NATIONAL LABORATORY
UPTON, N.Y. 11973

RHIC CONTROLS WIRING DIAGRAM
BLDG. 1004B, CFE-4B-PS2
yi3-qd6-ps/yi3-qf7-ps

SIZE D | DRAWING NUMBER 94028529 | REV. A

MATERIAL: ——— SCALE: NA WEIGHT: – SHEET 75 OF x

*AUTOCAD

ACS, BNL 8/27/99 1:34 PM 8529_76.dwg

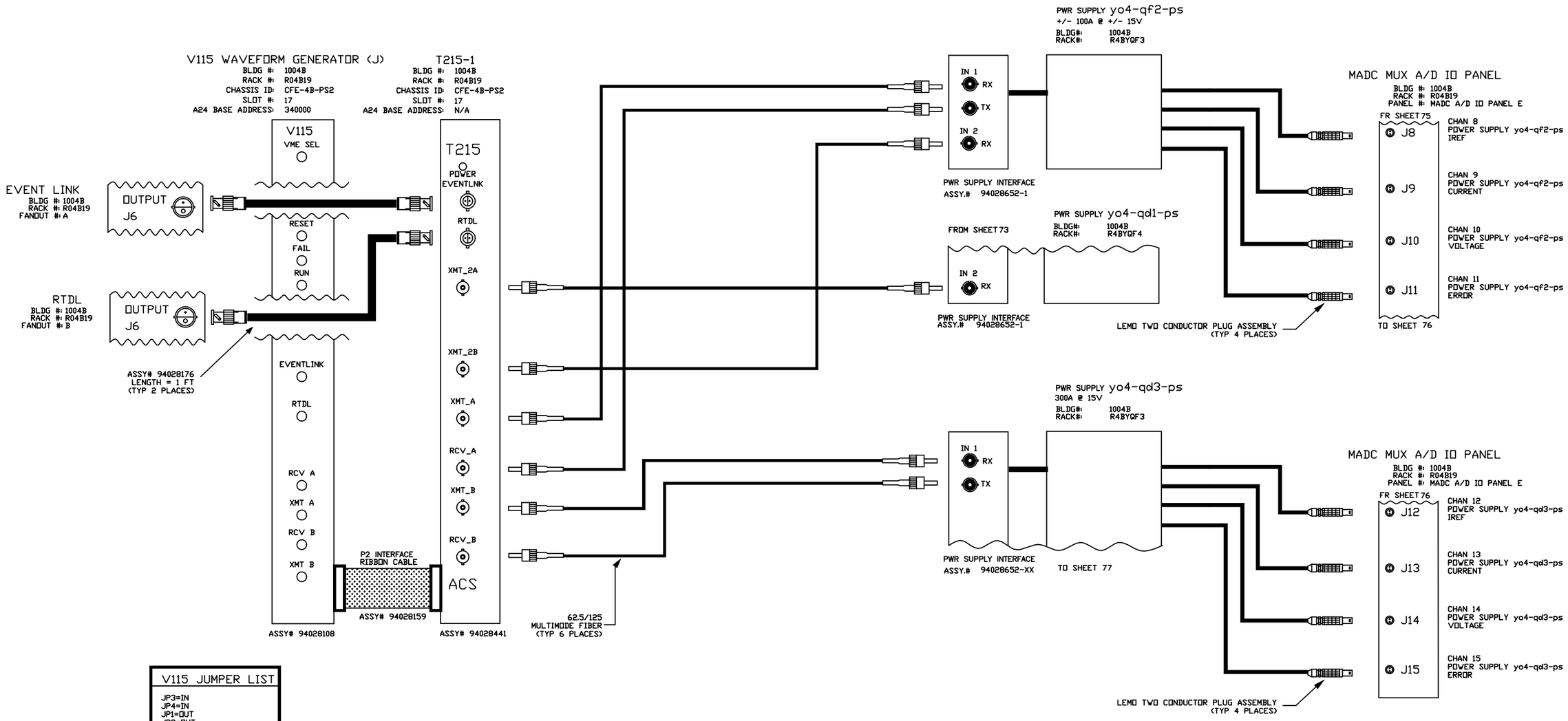

V115 JUMPER LIST
JP3=IN JP4=IN JP1=OUT JP2=OUT
A24 BASE ADDRESS JB1-A23=IN JB1-A22=IN JB1-A21=OUT JB1-A20=OUT JB1-A19=IN JB1-A18=OUT

-3	-2	-1	REF DESIGNATOR	ITEM NO.	DESCRIPTION	MAT'L DWG NO.,BNL NO.
QTY REQD						

INTERPRET IN GENERAL ACCORDANCE WITH ASME Y14.24M-1989

UNLESS OTHERWISE SPECIFIED DIMENSIONS ARE IN INCHES

DECIMAL TOLERANCES .X ±.030 .XX ±.015 .XXX ±.005 ANGULAR TOLERANCE ± .5°

NA FINISH

BREAK SHARP EDGES MAX. XX MIN. XX

OUTSTANDING ECN

Q.A. CATEGORY A-3	DATE	
DRAWN BY Ed Koropsak	10/8/98	
CHECKED BY		
DESIGN APPROVAL		
ENGINEER APPROVAL R.MICHNOFF	10/8/98	
SUPVR. APPROVAL		
NEXT ASSEMBLY		

BROOKHAVEN NATIONAL LABORATORY
UPTON, N.Y. 11973

RHIC CONTROLS WIRING DIAGRAM

BLDG. 1004B, CFE-4B-PS2

yo4-qf2-ps/yo4-qd3-ps

SIZE D — DRAWING NUMBER 94028529 — REV. A

MATERIAL: ——— SCALE: NA WEIGHT: – SHEET 76 OF x

*AUTOCAD

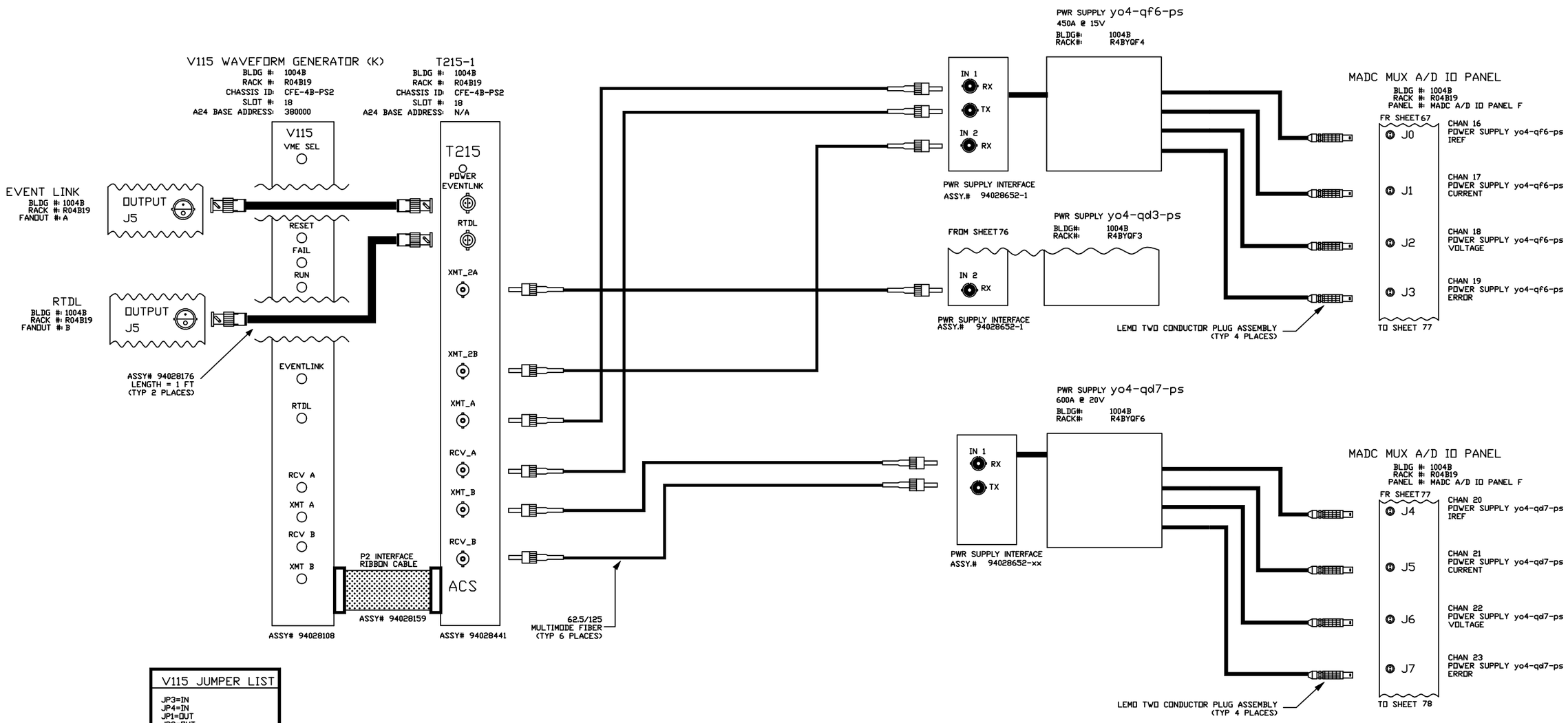

V115 JUMPER LIST
JP3=IN JP4=IN JP1=OUT JP2=OUT
A24 BASE ADDRESS JB1-A23=IN JB1-A22=IN JB1-A21=OUT JB1-A20=OUT JB1-A19=OUT JB1-A18=IN

-3	-2	-1	REF DESIGNATOR	ITEM NO.	DESCRIPTION	MAT'L DWG NO.,BNL NO.
QTY REQD						

INTERPRET IN GENERAL ACCORDANCE WITH ASME Y14.24M-1989	Q.A. CATEGORY A-3	DATE	BROOKHAVEN NATIONAL LABORATORY
	DRAWN BY Ed Koropsak	10/8/98	UPTON, N.Y. 11973
UNLESS OTHERWISE SPECIFIED DIMENSIONS ARE IN INCHES	CHECKED BY		RHIC CONTROLS WIRING DIAGRAM
DECIMAL TOLERANCES .X ±.030 .XX ±.015 .XXX ±.005 ANGULAR TOLERANCE ± .5°	DESIGN APPROVAL		BLDG. 1004B, CFE-4B-PS2
	ENGINEER APPROVAL R.MICHNOFF	10/8/98	yo4-qf6-ps/yo4-qd7-ps
	SUPVR. APPROVAL		SIZE D / 94028529 / REV. A
OUTSTANDING ECN	NA FINISH	BREAK SHARP EDGES MAX. XX MIN. XX	NEXT ASSEMBLY
			MATERIAL: ——— SCALE: NA WEIGHT: – SHEET 77 OF x

REV.	ZONE	ECN NO.	DATE	BY	CKR	APP.

BNL, BNL 8/17/00 1:55 PM 8529_78.dwg

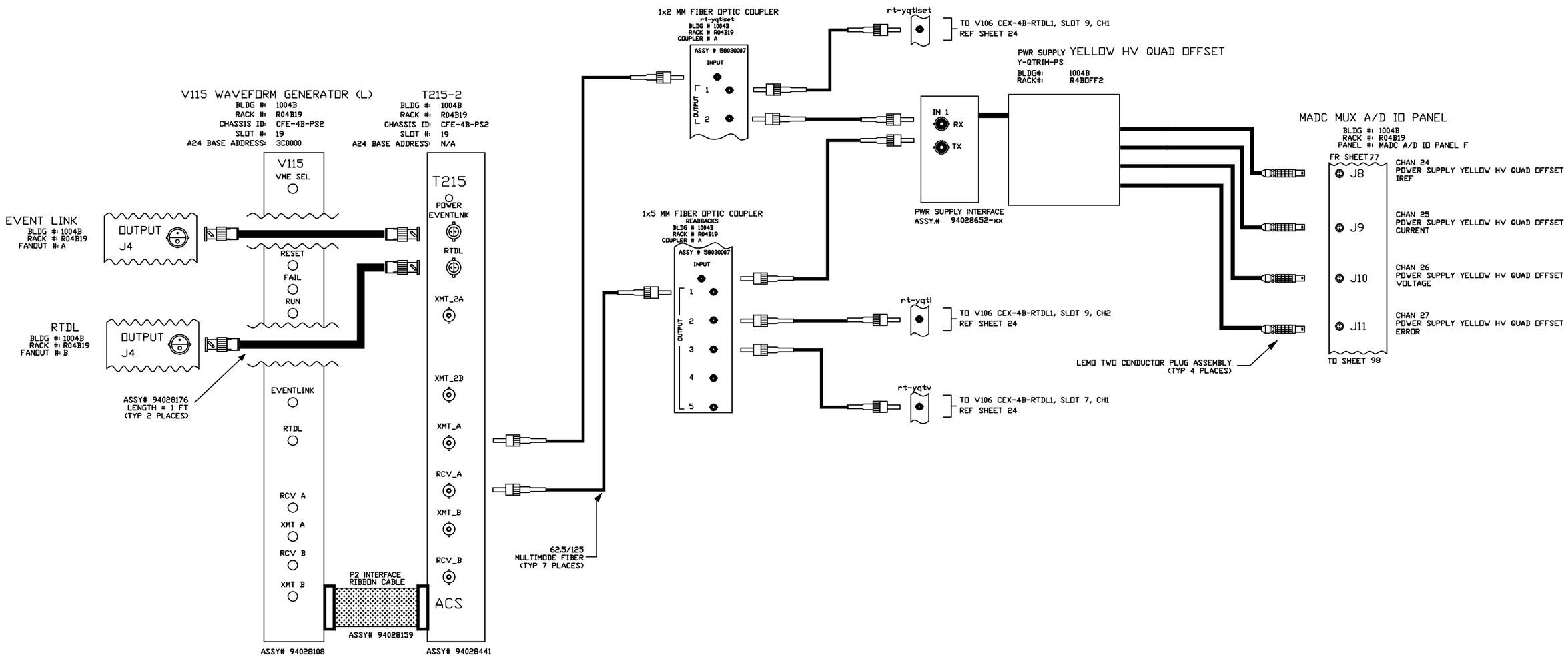

V115 JUMPER LIST
JP3=IN JP4=IN JP1=OUT JP2=OUT
A24 BASE ADDRESS JB1-A23=IN JB1-A22=IN JB1-A21=OUT JB1-A20=OUT JB1-A19=OUT JB1-A18=OUT

-3	-2	-1	REF DESIGNATOR	ITEM NO.	DESCRIPTION	MAT'L DWG NO./BNL NO.
QTY REQD						

INTERPRET IN GENERAL ACCORDANCE WITH ASME Y14.24M-1989

UNLESS OTHERWISE SPECIFIED DIMENSIONS ARE IN INCHES

DECIMAL TOLERANCES
.X ±.030
.XX ±.015
.XXX ±.005
ANGULAR TOLERANCE ± .5°

NA FINISH

BREAK SHARP EDGES MAX. XX MIN. XX

OUTSTANDING ECN

Q.A. CATEGORY A-3

		DATE
DRAWN BY	Ed Koropsak	10/8/98
CHECKED BY		
DESIGN APPROVAL		
ENGINEER APPROVAL	R.MICHNOFF	10/8/98
SUPVR. APPROVAL		

NEXT ASSEMBLY

BROOKHAVEN NATIONAL LABORATORY
UPTON, N.Y. 11973

RHIC CONTROLS WIRING DIAGRAM
BLDG. 1004B, CFE-4B-PS2
YELLOW HV QUAD OFFSET

SIZE D — DRAWING NUMBER 94028529 — REV. A

MATERIAL: ——— SCALE: NA WEIGHT: — SHEET 78

*AUTOCAD

REV.	ZONE	ECN NO.	DATE	BY	CKR	APP.

Phil Pape, Controls Division 9/13/2002 1:30 PM 8529_79.dwg

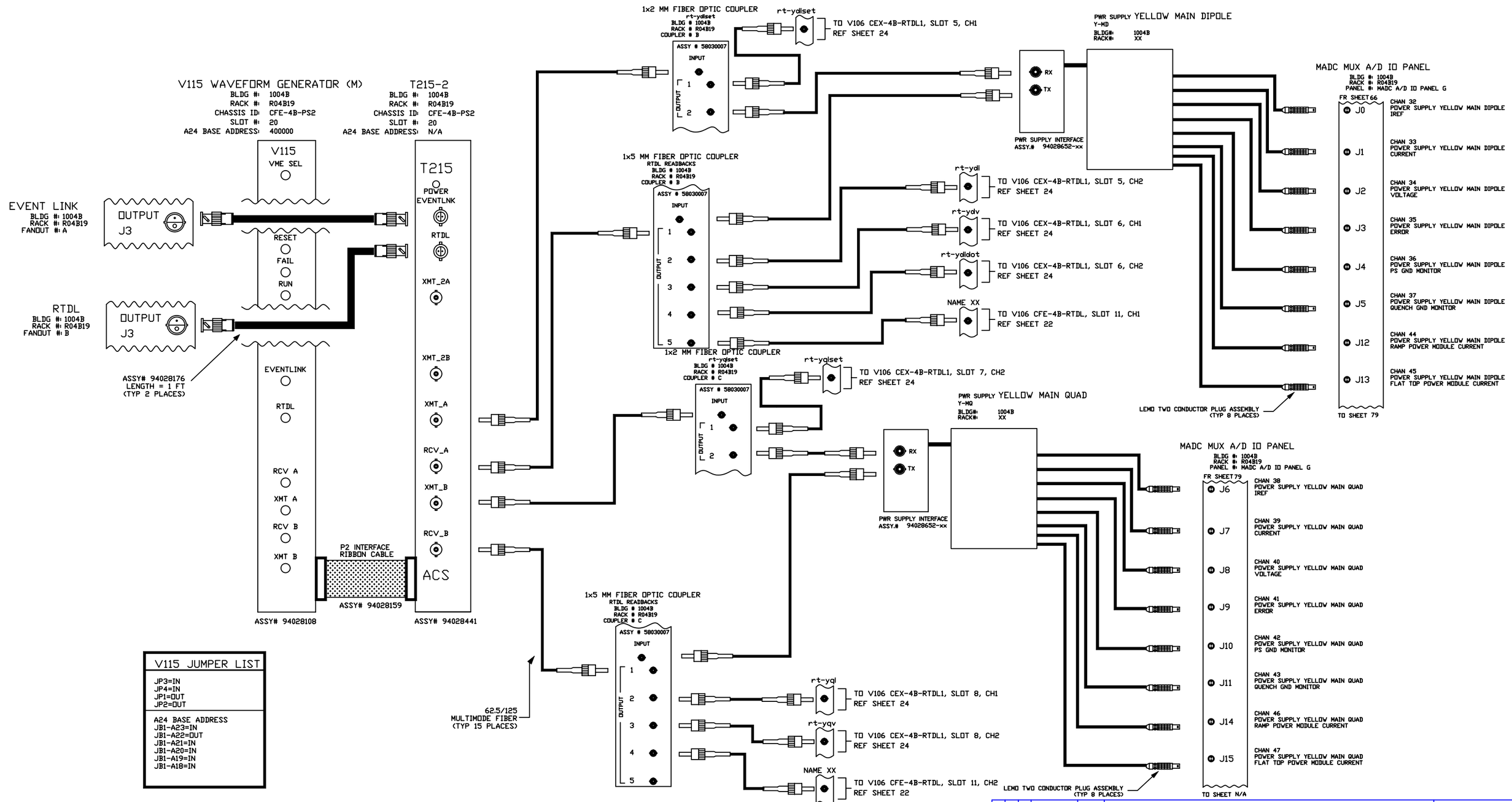

V115 JUMPER LIST

JP3=IN
JP4=IN
JP1=OUT
JP2=OUT

A24 BASE ADDRESS
JB1-A23=IN
JB1-A22=OUT
JB1-A21=IN
JB1-A20=IN
JB1-A19=IN
JB1-A18=IN

-3	-2	-1	REF DESIGNATOR	ITEM NO.	DESCRIPTION	MAT'L DWG NO.,BML NO.
QTY REQD						

INTERPRET IN GENERAL ACCORDANCE WITH ASME Y14.24M-1989

UNLESS OTHERWISE SPECIFIED DIMENSIONS ARE IN INCHES

DECIMAL TOLERANCES
.X ±.030
.XX ±.015
.XXX ±.005
ANGULAR TOLERANCE
± .5°

NA FINISH

BREAK SHARP EDGES
MAX. XX MIN. XX

OUTSTANDING ECN

Q.A. CATEGORY A-3

		DATE
DRAWN BY	PAPE	09/13/2002
CHECKED BY		
DESIGN APPROVAL		
ENGINEER APPROVAL	R.MICHNOFF	10/8/98
SUPVR. APPROVAL		

NEXT ASSEMBLY

BROOKHAVEN NATIONAL LABORATORY
UPTON, N.Y. 11973

RHIC CONTROLS WIRING DIAGRAM
BLDG. 1004B, CFE-4B-PS2
YELLOW MAIN DIPOLE/MAIN QUAD

SIZE D
DRAWING NUMBER 94028529
REV. A

MATERIAL: ——— SCALE: NA WEIGHT: – SHEET 79 OF x

*AUTOCAD

REV.	ZONE	ECN NO.	DATE	BY	CKR	APP.

EVENT INPUT MODULE (0)

BLDG #: 1004B
RACK #: R4B04
CHASSIS ID: CFE-4B-EVT
SLOT #: 6
A16 BASE ADDRESS: NA

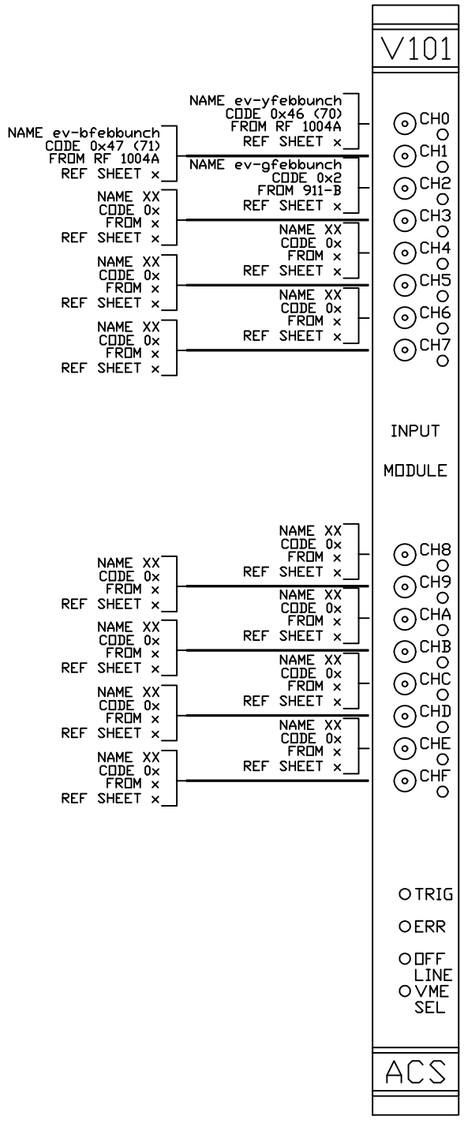

EVENT INPUT MODULE (1)

BLDG #: 1004B
RACK #: R4B04
CHASSIS ID: CFE-4B-EVT
SLOT #: 7
A16 BASE ADDRESS: NA

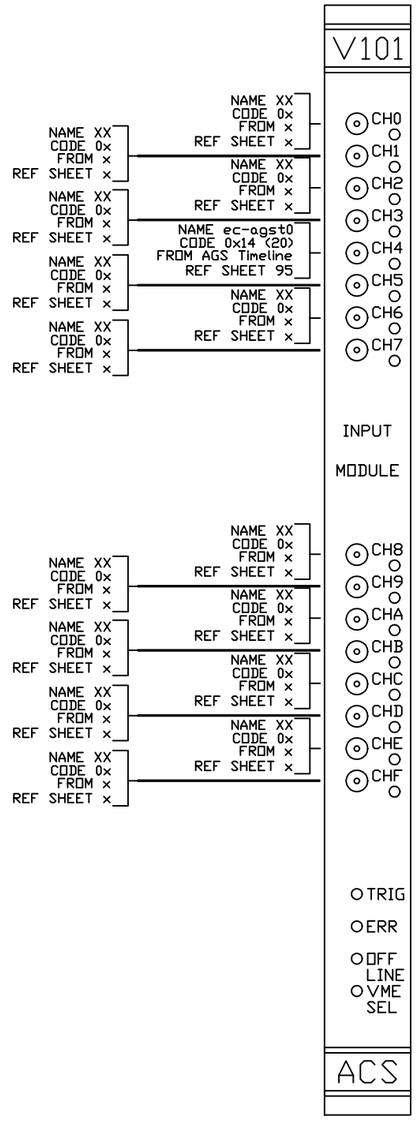

EVENT INPUT MODULE (2)

BLDG #: 1004B
RACK #: R4B04
CHASSIS ID: CFE-4B-EVT
SLOT #: 8
A16 BASE ADDRESS: NA

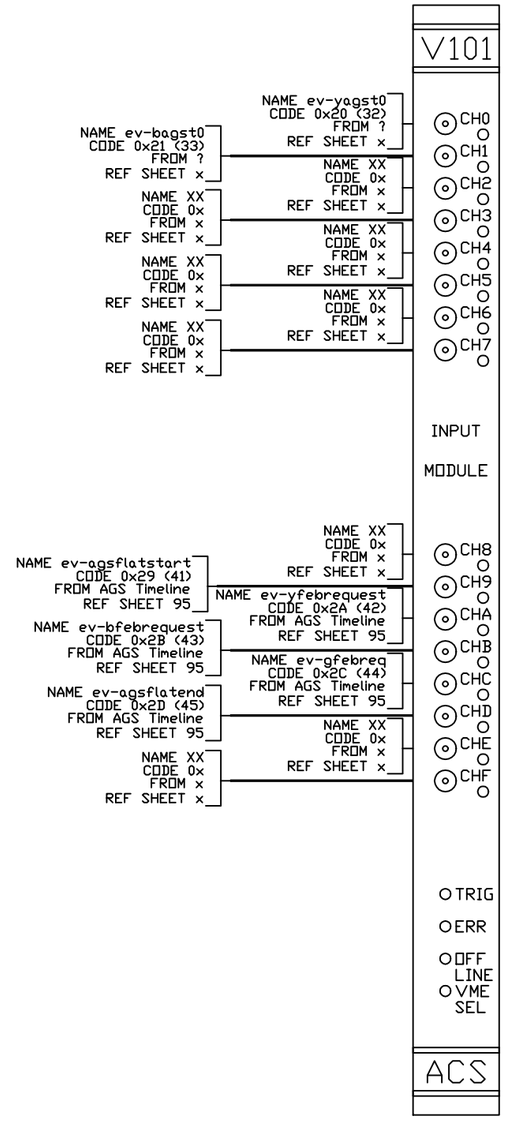

EVENT INPUT MODULE (3)

BLDG #: 1004B
RACK #: R4B04
CHASSIS ID: CFE-4B-EVT
SLOT #: 9
A16 BASE ADDRESS: NA

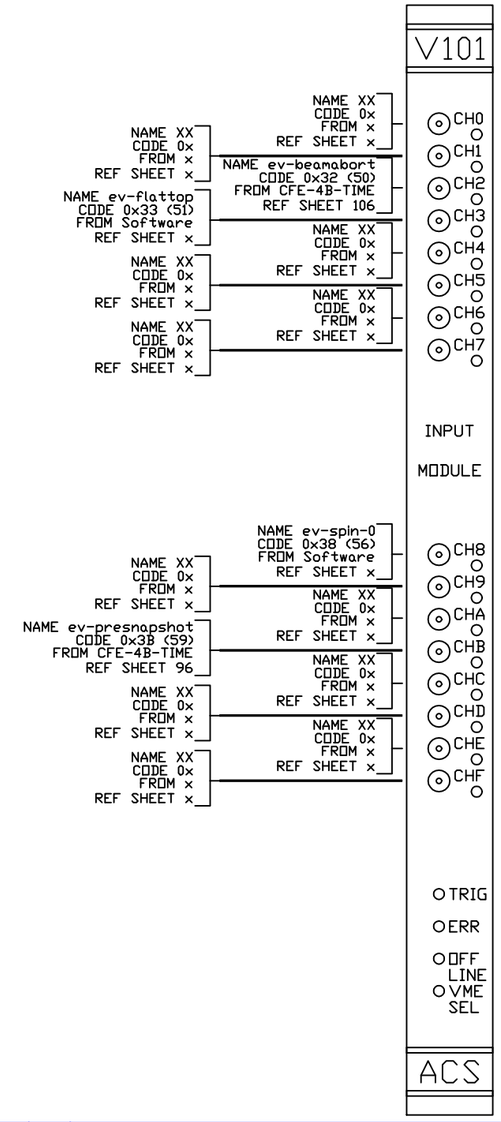

-3	-2	-1	REF DESIGNATOR	ITEM NO.	DESCRIPTION	MAT'L DWG NO.,BNL NO.
QTY REQD						

INTERPRET IN GENERAL ACCORDANCE WITH ASME Y14.24M-1989

UNLESS OTHERWISE SPECIFIED DIMENSIONS ARE IN INCHES
DECIMAL TOLERANCES .X ±.030 .XX ±.015 .XXX ±.005
ANGULAR TOLERANCE ± .5°

OUTSTANDING ECN: NA
FINISH: √
BREAK SHARP EDGES MAX. XX MIN. XX

Q.A. CATEGORY A-3	DATE	
DRAWN BY Ed Koropsak	10/9/98	
CHECKED BY		
DESIGN APPROVAL		
ENGINEER APPROVAL R. MICHNOFF	10/9/98	
SUPVR. APPROVAL		
NEXT ASSEMBLY		

BROOKHAVEN NATIONAL LABORATORY
UPTON, N.Y. 11973

RHIC CONTROLS WIRING DIAGRAM
SERVICE BLDG 1004B
EVENT LINK INPUTS

SIZE D | DRAWING NUMBER 94028529 | REV. A

MATERIAL: ——— SCALE: NA WEIGHT: – SHEET 80

BNL 10/22/01 1:20 PM 8529_80.dwg

*AUTOCAD

REV.	ZONE	ECN NO.	DATE	BY	CKR	APP.

EVENT INPUT MODULE (4)

BLDG #: 1004B
RACK #: R4B04
CHASSIS ID: CFE-4B-EVT
SLOT #: 10
A16 BASE ADDRESS: NA

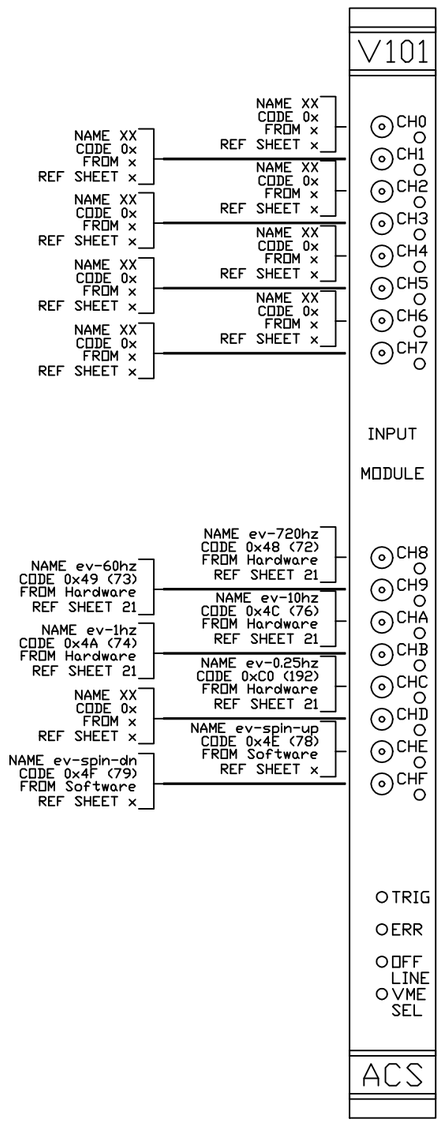

EVENT INPUT MODULE (5)

BLDG #: 1004B
RACK #: R4B04
CHASSIS ID: CFE-4B-EVT
SLOT #: 11
A16 BASE ADDRESS: NA

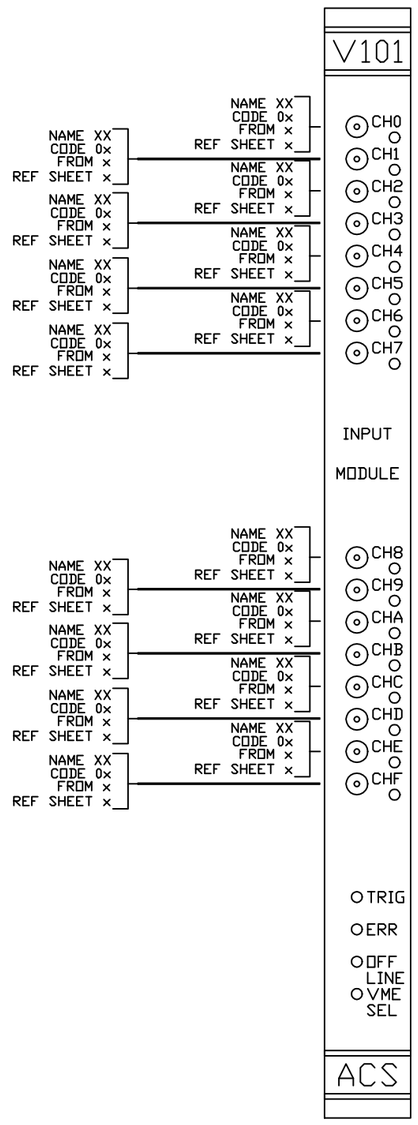

EVENT INPUT MODULE (6)

BLDG #: 1004B
RACK #: R4B04
CHASSIS ID: CFE-4B-EVT
SLOT #: 12
A16 BASE ADDRESS: NA

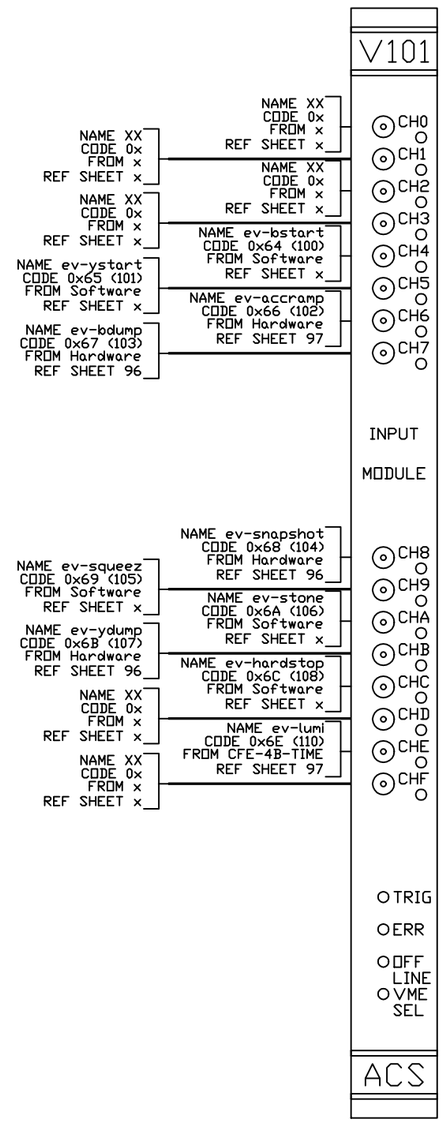

EVENT INPUT MODULE (7)

BLDG #: 1004B
RACK #: R4B04
CHASSIS ID: CFE-4B-EVT
SLOT #: 13
A16 BASE ADDRESS: NA

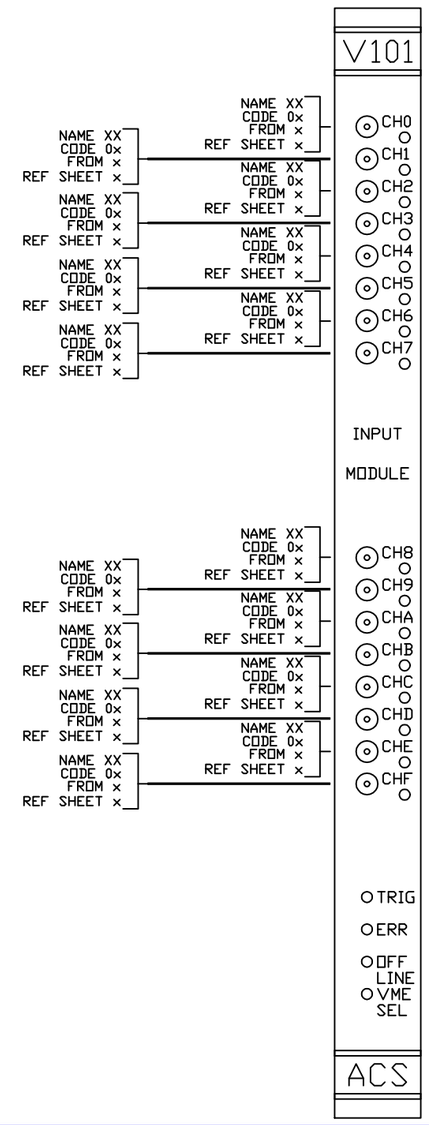

-3	-2	-1	REF DESIGNATOR	ITEM NO.	DESCRIPTION	MAT'L DWG NO.,BNL NO.
QTY REQD						

INTERPRET IN GENERAL ACCORDANCE WITH ASME Y14.24M-1989

UNLESS OTHERWISE SPECIFIED DIMENSIONS ARE IN INCHES
DECIMAL TOLERANCES .X ±.030 .XX ±.015 .XXX ±.005
ANGULAR TOLERANCE ± .5°

NA FINISH — BREAK SHARP EDGES MAX. XX MIN. XX

OUTSTANDING ECN

Q.A. CATEGORY A-3		DATE
DRAWN BY	Ed Koropsak	10/9/98
CHECKED BY		
DESIGN APPROVAL		
ENGINEER APPROVAL	R. MICHNOFF	10/9/98
SUPVR. APPROVAL		
NEXT ASSEMBLY		

BROOKHAVEN NATIONAL LABORATORY
UPTON, N.Y. 11973

RHIC CONTROLS WIRING DIAGRAM
SERVICE BLDG 1004B
EVENT LINK INPUTS

SIZE D — DRAWING NUMBER 94028529 — REV. A

MATERIAL: ——— SCALE: NA WEIGHT: – SHEET 81

C-A, BNL 3/20/01 2:12 PM 8529_81.dwg

*AUTOCAD

REV.	ZONE	ECN NO.	DATE	BY	CKR	APP.

EVENT INPUT MODULE (8)

BLDG #: 1004B
RACK #: R4B04
CHASSIS ID: CFE-4B-EVT
SLOT #: 14
A16 BASE ADDRESS: NA

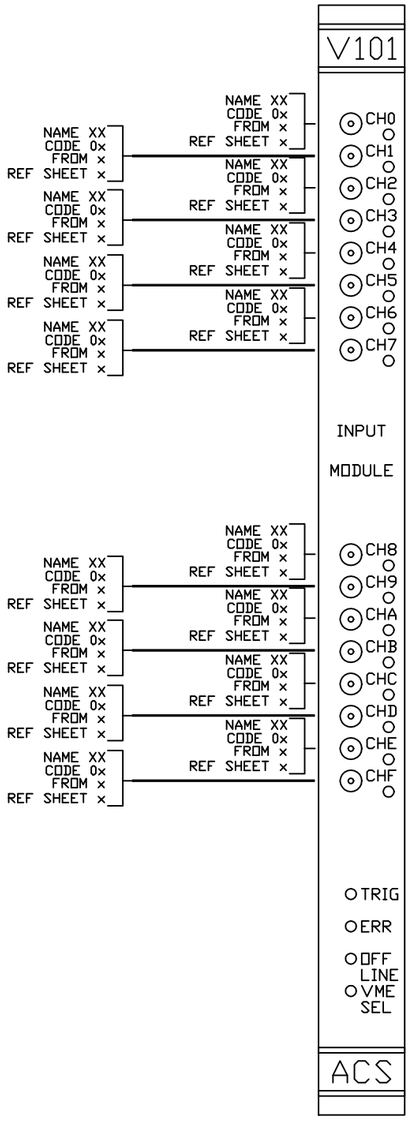

EVENT INPUT MODULE (9)

BLDG #: 1004B
RACK #: R4B04
CHASSIS ID: CFE-4B-EVT
SLOT #: 15
A16 BASE ADDRESS: NA

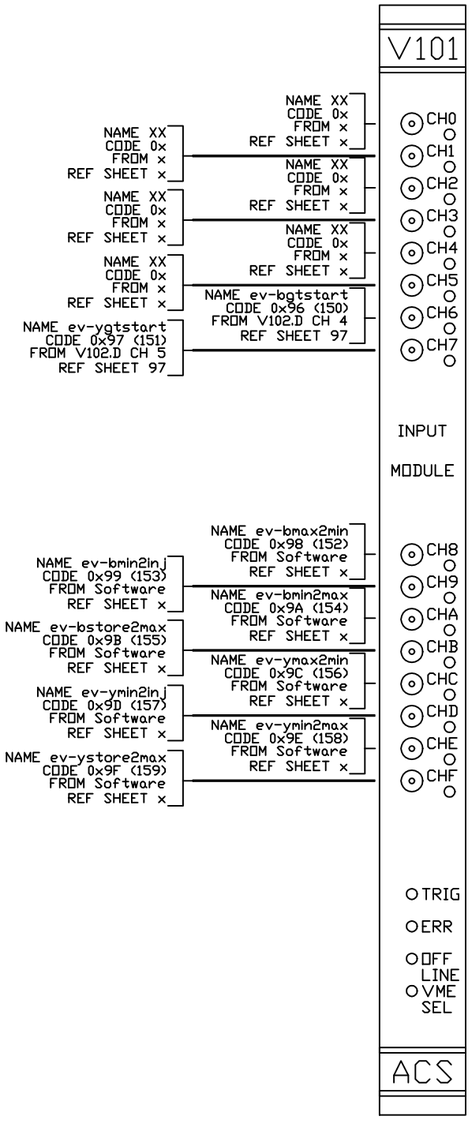

EVENT INPUT MODULE (A)

BLDG #: 1004B
RACK #: R4B04
CHASSIS ID: CFE-4B-EVT
SLOT #: 16
A16 BASE ADDRESS: NA

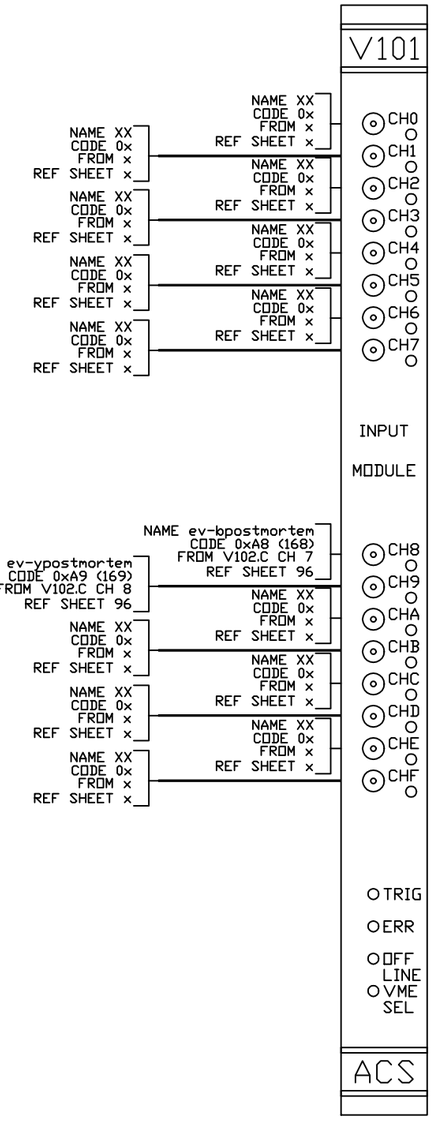

EVENT INPUT MODULE (B)

BLDG #: 1004B
RACK #: R4B04
CHASSIS ID: CFE-4B-EVT
SLOT #: 17
A16 BASE ADDRESS: NA

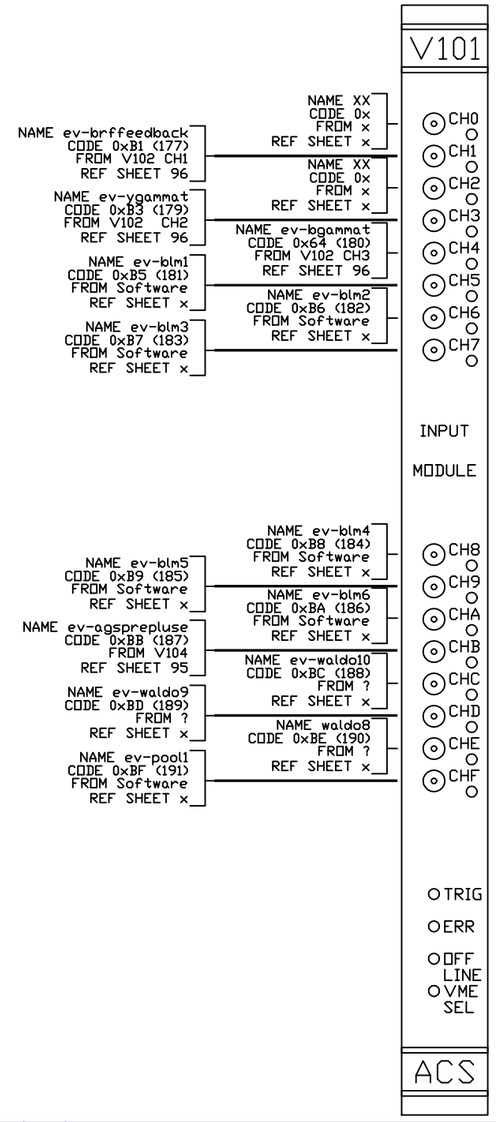

-3	-2	-1	REF DESIGNATOR	ITEM NO.	DESCRIPTION	MAT'L DWG NO.,BNL NO.
QTY REQD						

INTERPRET IN GENERAL ACCORDANCE WITH ASME Y14.24M-1989

UNLESS OTHERWISE SPECIFIED DIMENSIONS ARE IN INCHES

DECIMAL TOLERANCES
.X ±.030
.XX ±.015
.XXX ±.005
ANGULAR TOLERANCE ± .5°

OUTSTANDING ECN: NA

FINISH: √

BREAK SHARP EDGES MAX. XX MIN. XX

Q.A. CATEGORY A-3		DATE
DRAWN BY	Ed Koropsak	10/9/98
CHECKED BY		
DESIGN APPROVAL		
ENGINEER APPROVAL	R. MICHNOFF	10/9/98
SUPVR. APPROVAL		
NEXT ASSEMBLY		

BROOKHAVEN NATIONAL LABORATORY
UPTON, N.Y. 11973

RHIC CONTROLS WIRING DIAGRAM
SERVICE BLDG 1004B
EVENT LINK INPUTS

SIZE: D
DRAWING NUMBER: 94028529
REV.: A
MATERIAL: ———
SCALE: NA
WEIGHT: –
SHEET 82

C-A, BNL 3/20/01 2:50 PM 8529_82.dwg

*AUTOCAD

REV.	ZONE	ECN NO.	DATE	BY	CKR	APP.

EVENT INPUT MODULE (C)

BLDG #: 1004B
RACK #: R4B04
CHASSIS ID: CFE-4B-EVT
SLOT #: 18
A16 BASE ADDRESS: NA

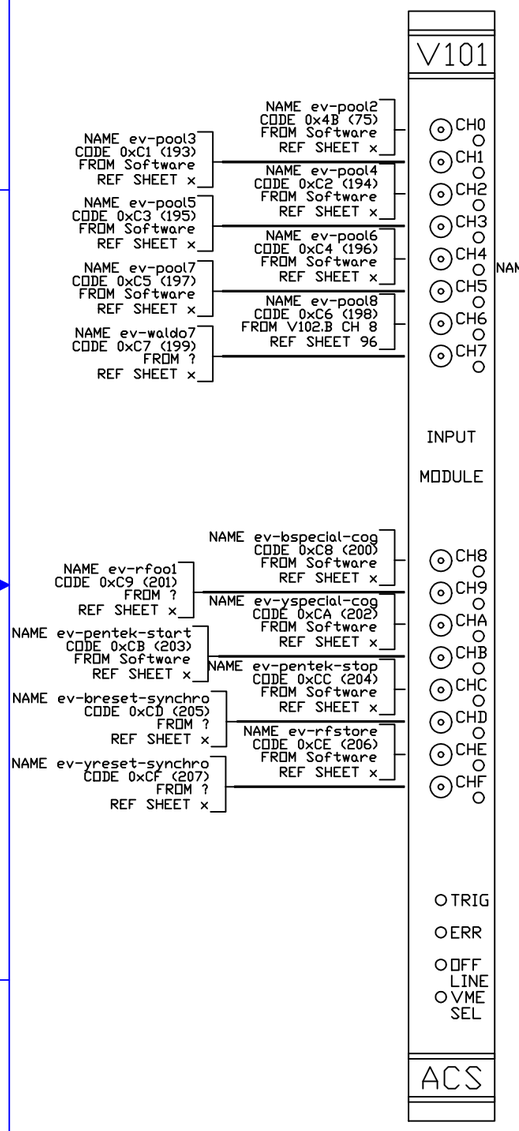

EVENT INPUT MODULE (D)

BLDG #: 1004B
RACK #: R4B04
CHASSIS ID: CFE-4B-EVT
SLOT #: 19
A16 BASE ADDRESS: NA

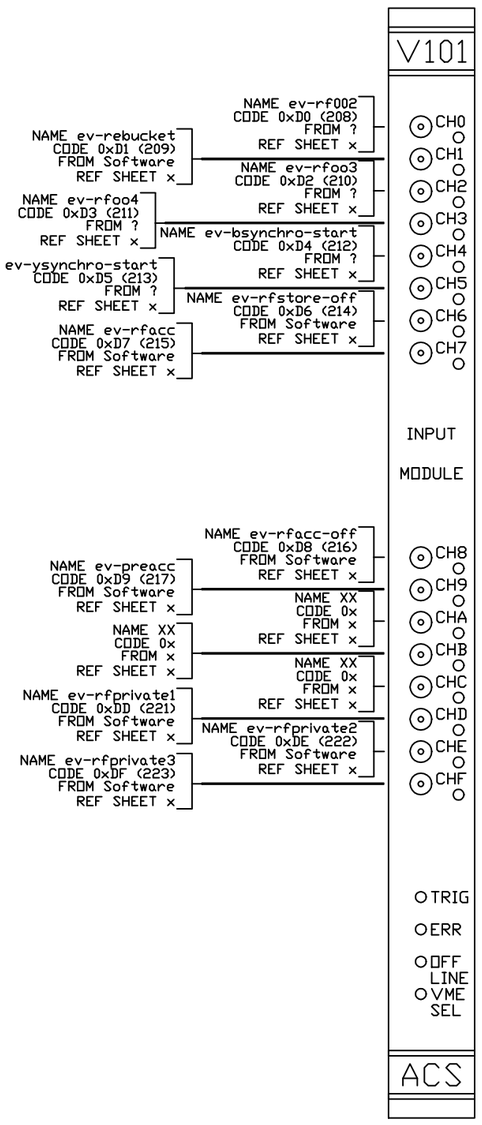

EVENT INPUT MODULE (E)

BLDG #: 1004B
RACK #: R4B04
CHASSIS ID: CFE-4B-EVT
SLOT #: 20
A16 BASE ADDRESS: NA

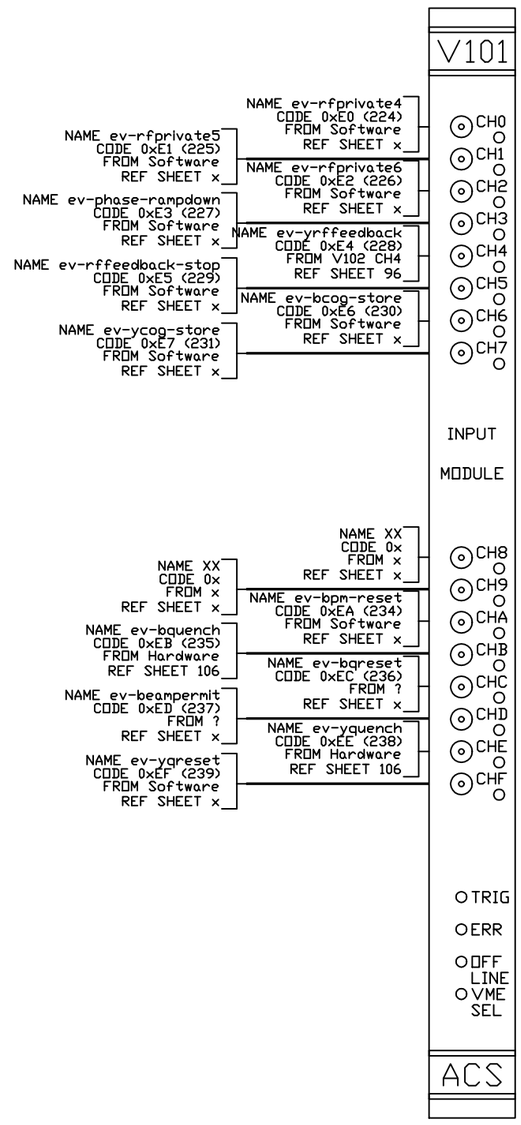

EVENT INPUT MODULE (F)

BLDG #: 1004B
RACK #: R4B04
CHASSIS ID: CFE-4B-EVT
SLOT #: 21
A16 BASE ADDRESS: NA

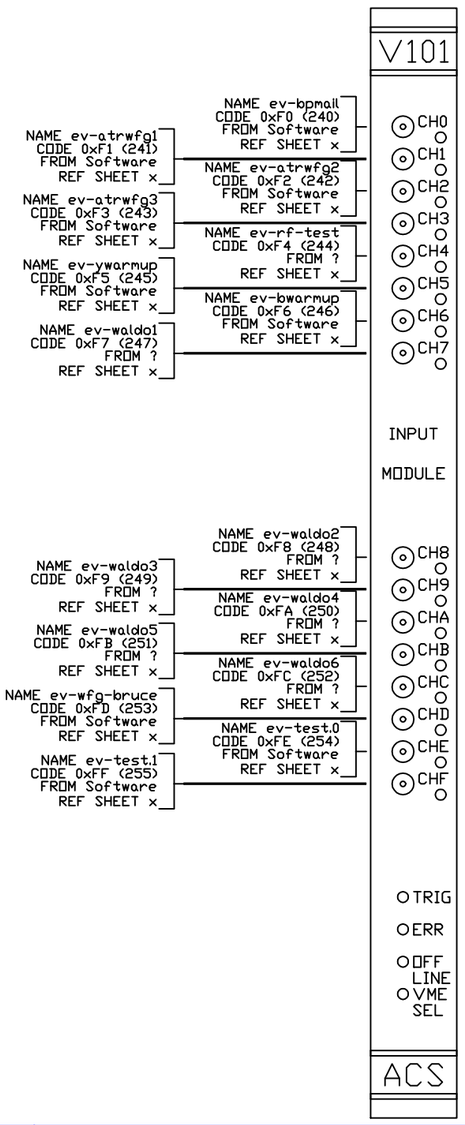

-3	-2	-1	REF DESIGNATOR	ITEM NO.	DESCRIPTION	MAT'L DWG NO.,BNL NO.
QTY REQD						

INTERPRET IN GENERAL ACCORDANCE WITH ASME Y14.24M-1989

UNLESS OTHERWISE SPECIFIED DIMENSIONS ARE IN INCHES
DECIMAL TOLERANCES .X ±.030 .XX ±.015 .XXX ±.005
ANGULAR TOLERANCE ± .5°

OUTSTANDING ECN: NA
FINISH: √
BREAK SHARP EDGES MAX. XX MIN. XX

Q.A. CATEGORY A-3	DATE	
DRAWN BY	Ed Koropsak	10/9/98
CHECKED BY		
DESIGN APPROVAL		
ENGINEER APPROVAL	R. MICHNOFF	10/9/98
SUPVR. APPROVAL		
NEXT ASSEMBLY		

BROOKHAVEN NATIONAL LABORATORY
UPTON, N.Y. 11973

RHIC CONTROLS WIRING DIAGRAM
SERVICE BLDG 1004B
EVENT LINK INPUTS

SIZE D | DRAWING NUMBER 94028529 | REV. A
MATERIAL: ——— | SCALE: NA | WEIGHT: – | SHEET 83

C-A, BNL 3/20/01 2:59 PM 8529_83.dwg

*AUTOCAD

ACS, BNL 8/27/99 2:01 PM 8529_84.dwg

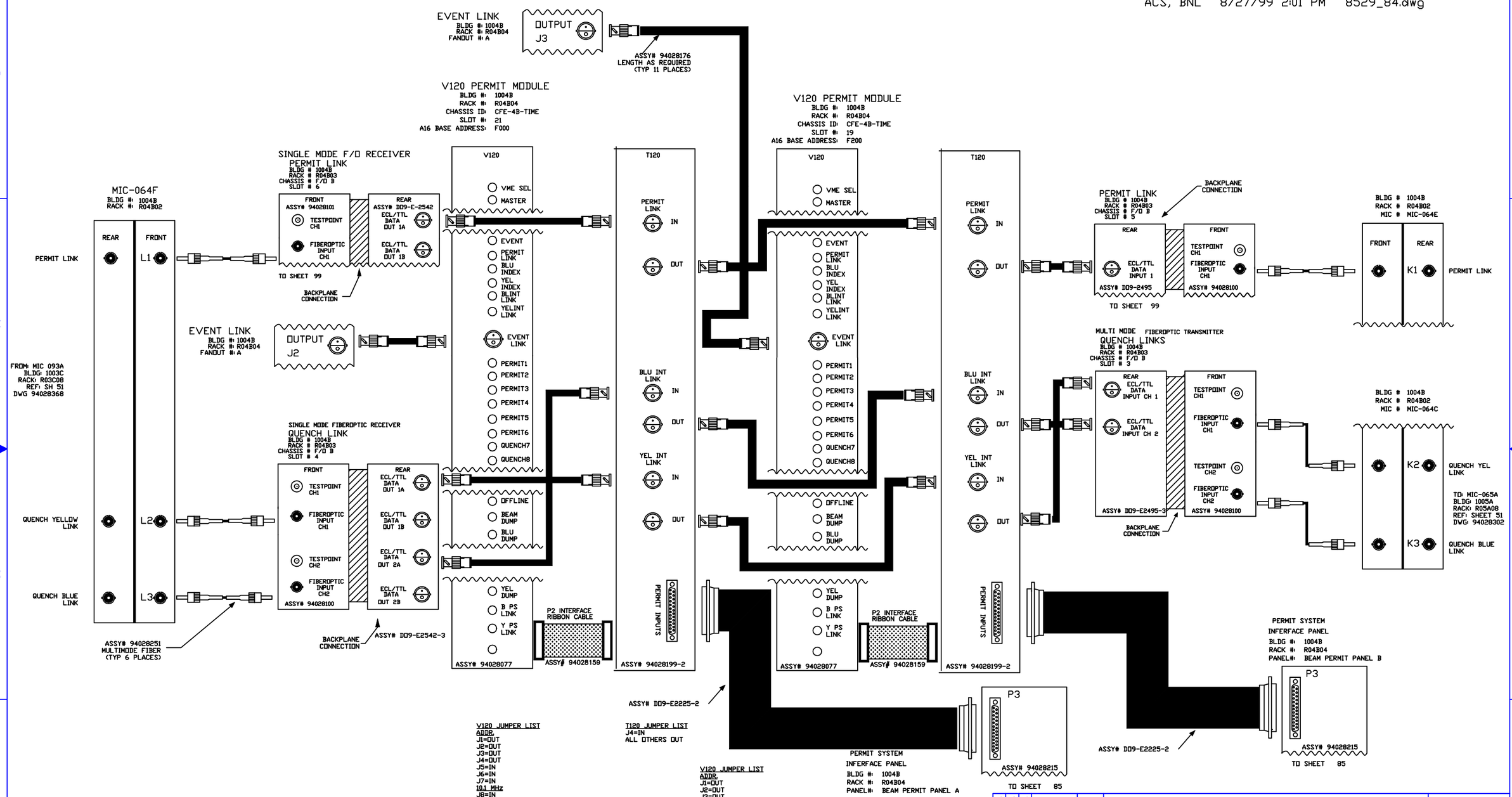

REV.	ZONE	ECN NO.	DATE	BY	CKR	APP.

-3	-2	-1	REF DESIGNATOR	ITEM NO.	DESCRIPTION	MAT'L DWG NO.,BNL NO.
QTY REQD						

INTERPRET IN GENERAL ACCORDANCE WITH ASME Y14.24M-1989

UNLESS OTHERWISE SPECIFIED DIMENSIONS ARE IN INCHES

DECIMAL TOLERANCES
.X ±.030
.XX ±.015
.XXX ±.005
ANGULAR TOLERANCE ± .5°

FINISH: NA

BREAK SHARP EDGES MAX. XX MIN. XX

OUTSTANDING ECN

Q.A. CATEGORY A-3

		DATE
DRAWN BY	Ed Koropsak	10/14/98
CHECKED BY		
DESIGN APPROVAL		
ENGINEER APPROVAL	R. MICHNOFF	10/14/98
SUPVR. APPROVAL		

NEXT ASSEMBLY

BROOKHAVEN NATIONAL LABORATORY
UPTON, N.Y. 11973

RHIC CONTROLS WIRING DIAGRAM

SERVIVE BLDG. 1004B, CHASSIS CFE-4B-TIME

V120/T120 PERMIT SYSTEM

SIZE: D

DRAWING NUMBER: 94028529

REV.: A

MATERIAL: ——— SCALE: NA WEIGHT: – SHEET 84 OF X

*AUTOCAD

REV.	ZONE	ECN NO.	DATE	BY	CKR	APP.

ACS, BNL 1/28/00 2:44 PM 8529_85.dwg

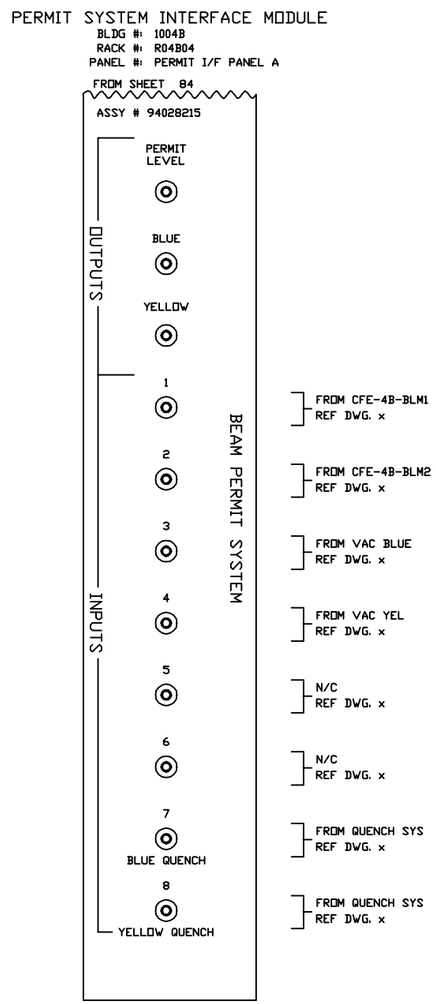

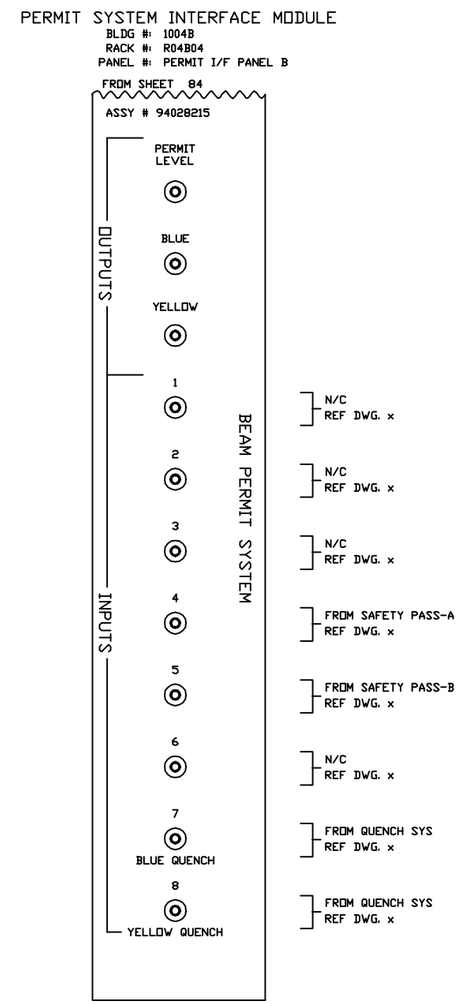

-3	-2	-1	REF DESIGNATOR	ITEM NO.	DESCRIPTION	MAT'L DWG NO./BNL NO.
QTY REQD						

INTERPRET IN GENERAL ACCORDANCE WITH ASME Y14.24M-1989

UNLESS OTHERWISE SPECIFIED DIMENSIONS ARE IN INCHES

DECIMAL TOLERANCES
.X ±.030
.XX ±.015
.XXX ±.005
ANGULAR TOLERANCE
± .5°

NA FINISH

BREAK SHARP EDGES
MAX. XX MIN. XX

OUTSTANDING ECN

Q.A. CATEGORY A-3		DATE
DRAWN BY	Ed Koropsak	10/14/98
CHECKED BY		
DESIGN APPROVAL		
ENGINEER APPROVAL	R. MICHNOFF	10/14/98
SUPVR. APPROVAL		

NEXT ASSEMBLY

BROOKHAVEN NATIONAL LABORATORY
UPTON, N.Y. 11973

RHIC CONTROLS WIRING DIAGRAM
BLDG. 1004B, RACK R04B04

PERMIT SYSTEM INTERFACE PANEL

SIZE D | DRAWING NUMBER 94028529 | REV. A

MATERIAL: ——— SCALE: NA WEIGHT: – SHEET 85 / 108

*AUTOCAD

REV.	ZONE	ECN NO.	DATE	BY	CKR	APP.

C-A, BNL 3/20/01 3:02 PM 8529_86.dwg

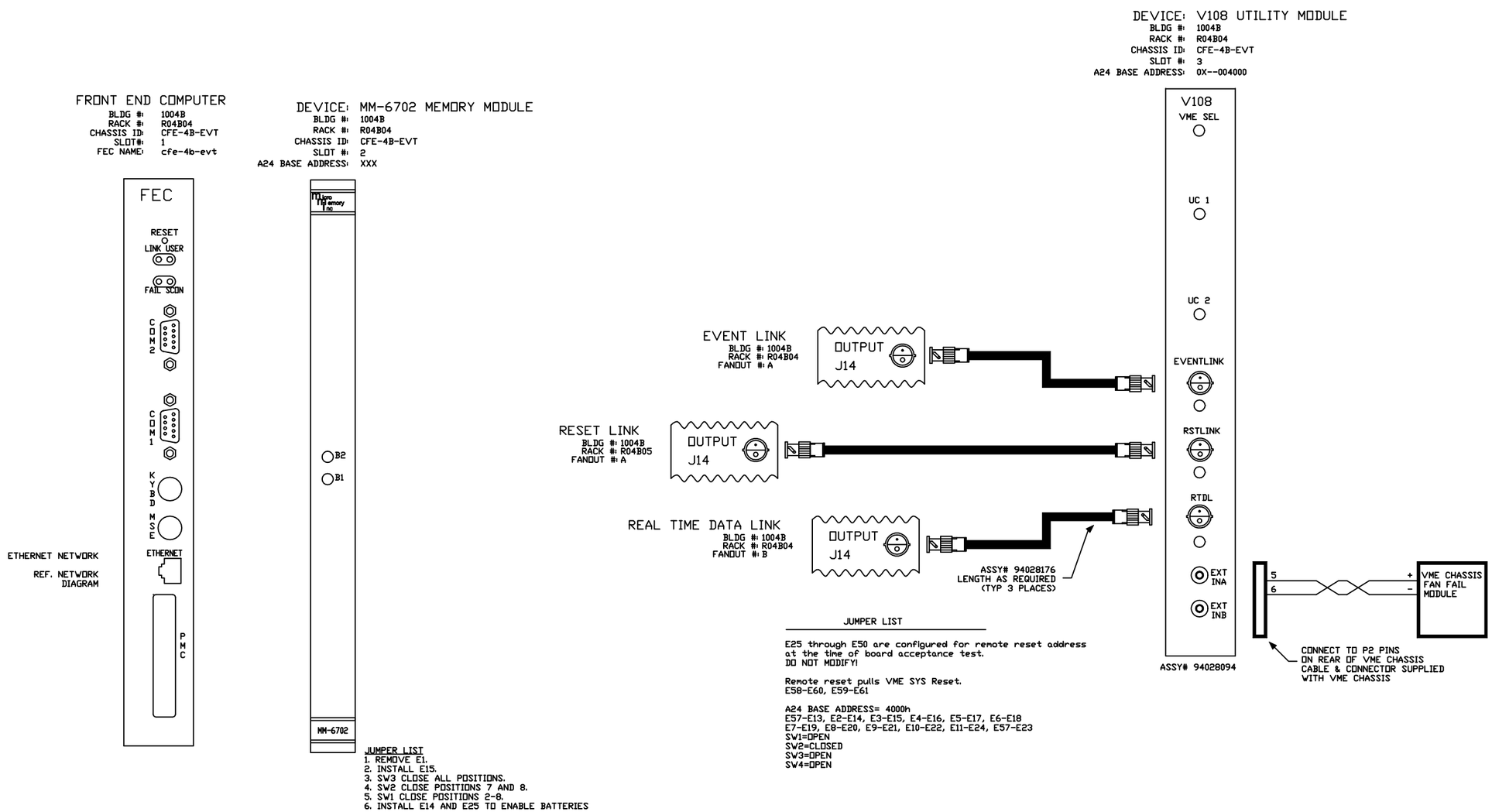

-3	-2	-1	REF DESIGNATOR	ITEM NO.	DESCRIPTION	MAT'L DWG NO./BNL NO.
QTY REQD						

INTERPRET IN GENERAL ACCORDANCE WITH ASME Y14.24M-1989	Q.A. CATEGORY A-3	DATE	BROOKHAVEN NATIONAL LABORATORY UPTON, N.Y. 11973
UNLESS OTHERWISE SPECIFIED DIMENSIONS ARE IN INCHES	DRAWN BY Ed Koropsak	10/15/98	RHIC CONTROLS WIRING DIAGRAM
DECIMAL TOLERANCES .X ±.030 .XX ±.015 .XXX ±.005 ANGULAR TOLERANCE ± .5°	CHECKED BY		1004B, VME CHASSIS CFE-4B-EVT
	DESIGN APPROVAL		FT END COMP/V108 UTIL MODULE
	ENGINEER APPROVAL R. MICHNOFF	10/15/98	
	SUPVR. APPROVAL		SIZE D — 94028529 — REV. A
NA FINISH	BREAK SHARP EDGES MAX. XX MIN. XX	NEXT ASSEMBLY	DRAWING NUMBER
OUTSTANDING ECN			MATERIAL: ——— SCALE: NA WEIGHT: – SHEET 86 / 108

*AUTOCAD

ACS, BNL 1/28/00 2:47 PM 8529_87.dwg

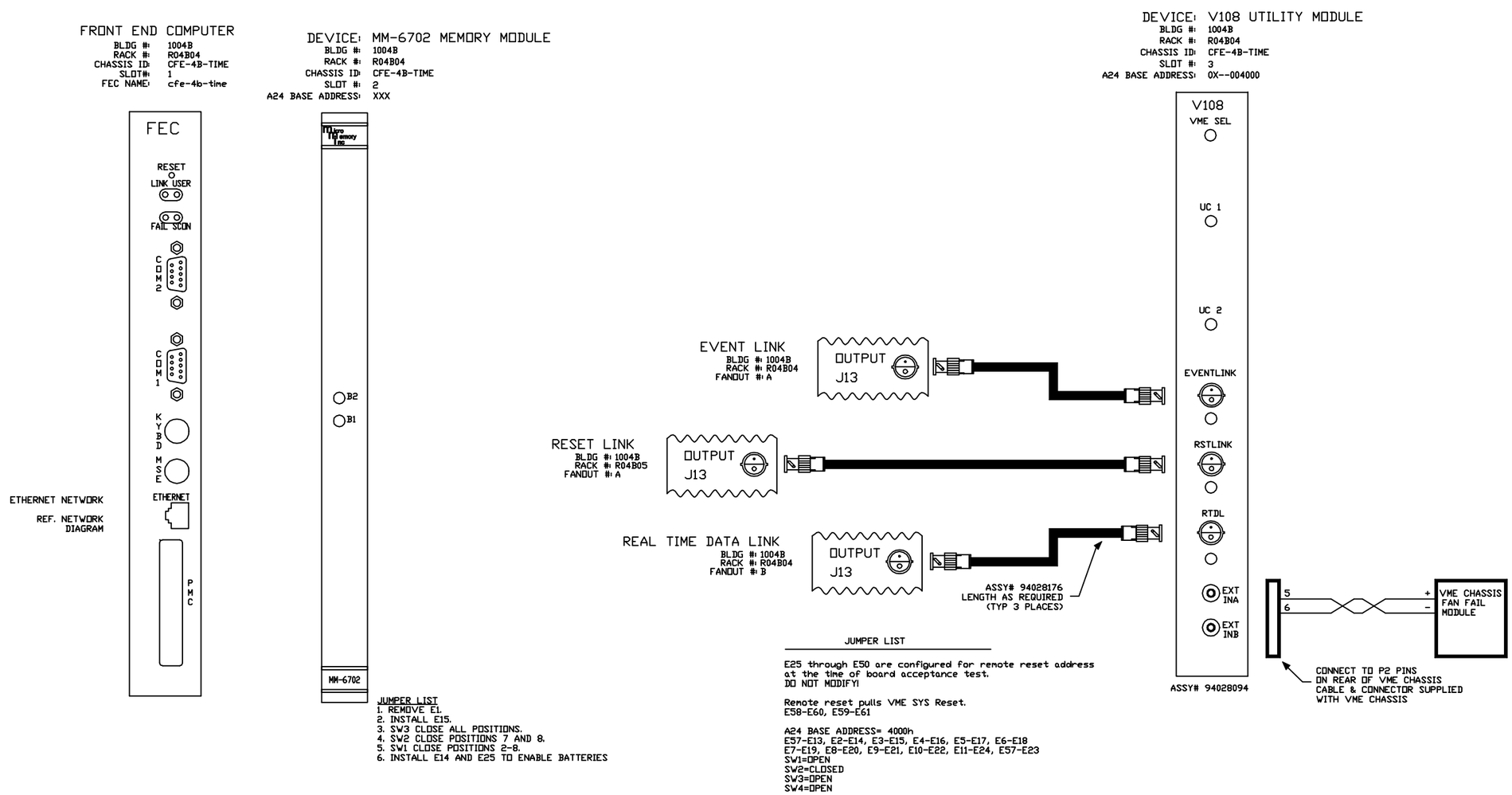

JUMPER LIST

E25 through E50 are configured for remote reset address at the time of board acceptance test.
DO NOT MODIFY!

Remote reset pulls VME SYS Reset.
E58-E60, E59-E61

A24 BASE ADDRESS= 4000h
E57-E13, E2-E14, E3-E15, E4-E16, E5-E17, E6-E18
E7-E19, E8-E20, E9-E21, E10-E22, E11-E24, E57-E23
SW1=OPEN
SW2=CLOSED
SW3=OPEN
SW4=OPEN

-3	-2	-1	REF DESIGNATOR	ITEM NO.	DESCRIPTION	MAT'L DWG NO./BNL NO.
QTY REQD						

INTERPRET IN GENERAL ACCORDANCE WITH ASME Y14.24M-1989

UNLESS OTHERWISE SPECIFIED DIMENSIONS ARE IN INCHES

DECIMAL TOLERANCES
.X ±.030
.XX ±.015
.XXX ±.005
ANGULAR TOLERANCE
± .5°

OUTSTANDING ECN

NA FINISH

BREAK SHARP EDGES
MAX. XX MIN. XX

Q.A. CATEGORY A-3		DATE
DRAWN BY	Ed Koropsak	10/15/98
CHECKED BY		
DESIGN APPROVAL		
ENGINEER APPROVAL	R. MICHNOFF	10/15/98
SUPVR. APPROVAL		

NEXT ASSEMBLY

BROOKHAVEN NATIONAL LABORATORY
UPTON, N.Y. 11973

RHIC CONTROLS WIRING DIAGRAM
1004B, VME CHASSIS CFE-4B-TIME
FT END COMP/V108 UTIL MODULE

SIZE D
94028529
DRAWING NUMBER
REV. A

MATERIAL: ——— SCALE: NA WEIGHT: – SHEET 87 / 108

*AUTOCAD

REV.	ZONE	ECN NO.	DATE	BY	CKR	APP.

ACS, BNL 1/28/00 2:48 PM 8529_88.dwg

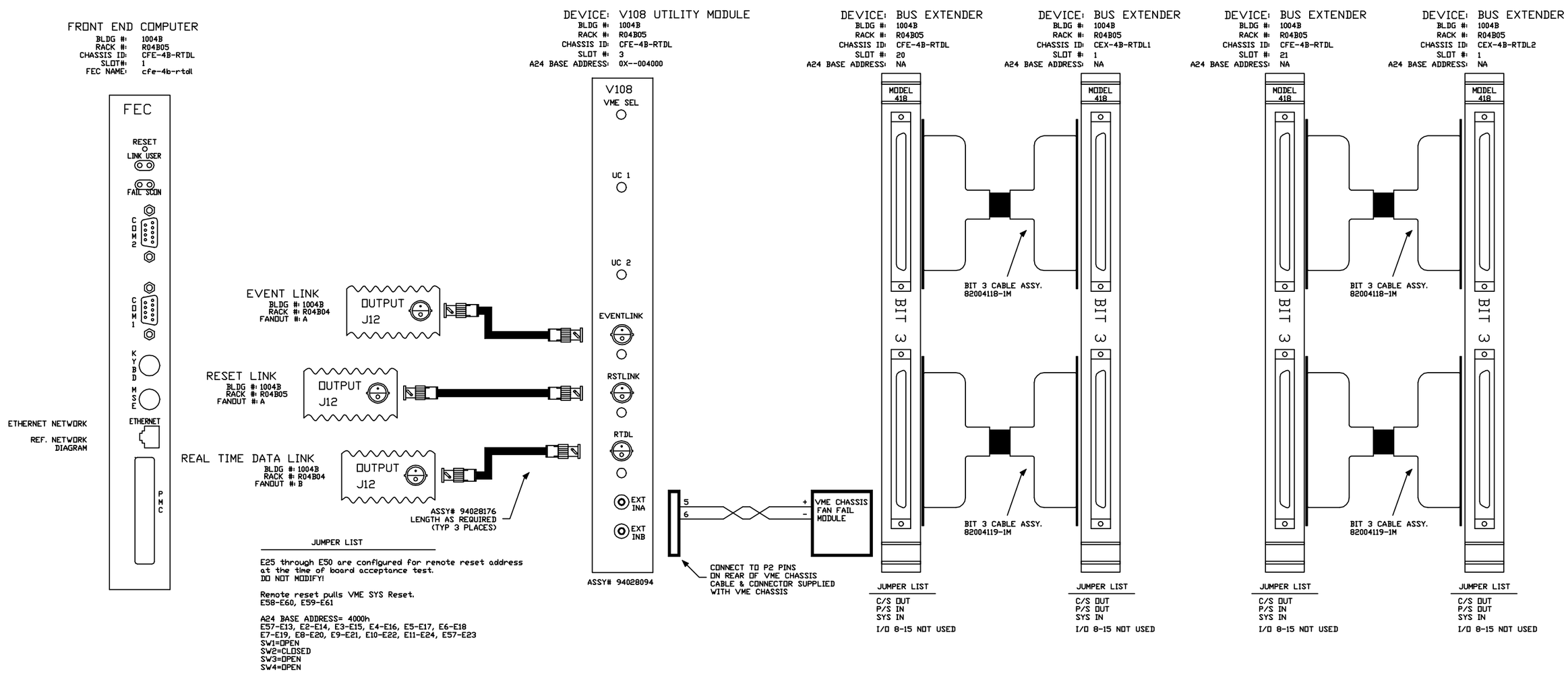

-3	-2	-1	REF DESIGNATOR	ITEM NO.	DESCRIPTION	MAT'L DWG NO.,BRL NO.
QTY REQD						

INTERPRET IN GENERAL ACCORDANCE WITH ASME Y14.24M-1989

UNLESS OTHERWISE SPECIFIED DIMENSIONS ARE IN INCHES

DECIMAL TOLERANCES
.X ±.030
.XX ±.015
.XXX ±.005
ANGULAR TOLERANCE
± .5°

FINISH: NA

BREAK SHARP EDGES MAX. XX MIN. XX

OUTSTANDING ECN

Q.A. CATEGORY A-3		DATE
DRAWN BY	Ed Koropsak	10/15/98
CHECKED BY		
DESIGN APPROVAL		
ENGINEER APPROVAL	R. MICHNOFF	10/15/98
SUPVR. APPROVAL		

NEXT ASSEMBLY

BROOKHAVEN NATIONAL LABORATORY
UPTON, N.Y. 11973

RHIC CONTROLS WIRING DIAGRAM

1004B, VME CHASSIS CFE-4B-RTDL

FT END COMP/V108 UTIL MODULE

SIZE D | DRAWING NUMBER 94028529 | REV. A

MATERIAL: ——— SCALE: NA WEIGHT: – SHEET 88 /108

*AUTOCAD

FUTURE BUS EXTENDERS

ACS, BNL 10/20/98 1:19 PM 8529_89.dwg

REV.	ZONE	ECN NO.	DATE	BY	CKR	APP.

DEVICE: BUS EXTENDER
BLDG #: 1004B
RACK #: R04B05
CHASSIS ID: CFE-4B-RTDL
SLOT #: X
A24 BASE ADDRESS: NA

DEVICE: BUS EXTENDER
BLDG #: 1004B
RACK #: R04B0X
CHASSIS ID: CEX-4B-RTDLX
SLOT #: 1
A24 BASE ADDRESS: NA

DEVICE: BUS EXTENDER
BLDG #: 1004B
RACK #: R04B05
CHASSIS ID: CFE-4B-RTDL
SLOT #: X
A24 BASE ADDRESS: NA

DEVICE: BUS EXTENDER
BLDG #: 1004B
RACK #: R04B0X
CHASSIS ID: CEX-4B-RTDLX
SLOT #: 1
A24 BASE ADDRESS: NA

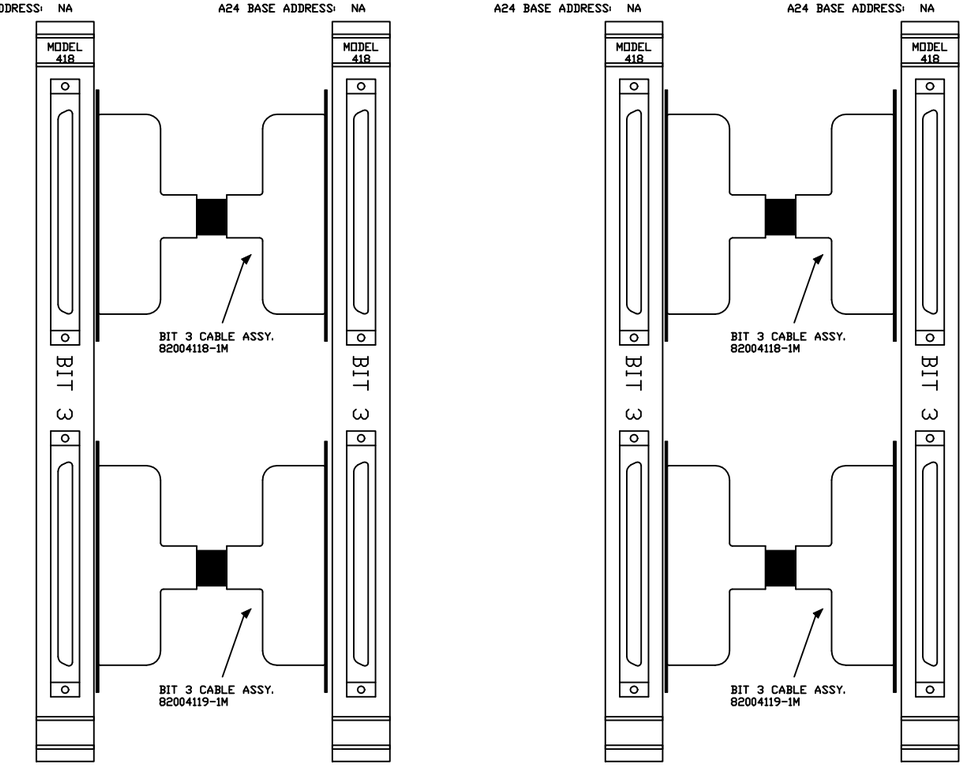

JUMPER LIST
C/S OUT
P/S IN
SYS IN
I/O 8-15 NOT USED

JUMPER LIST
C/S OUT
P/S OUT
SYS IN
I/O 8-15 NOT USED

JUMPER LIST
C/S OUT
P/S IN
SYS IN
I/O 8-15 NOT USED

JUMPER LIST
C/S OUT
P/S OUT
SYS IN
I/O 8-15 NOT USED

-3	-2	-1	REF DESIGNATOR	ITEM NO.	DESCRIPTION	MAT'L. DWG NO./BNL NO.
QTY REQD						

INTERPRET IN GENERAL ACCORDANCE WITH ASME Y14.24M-1989
UNLESS OTHERWISE SPECIFIED DIMENSIONS ARE IN INCHES
DECIMAL TOLERANCES
.X ±.030
.XX ±.015
.XXX ±.005
ANGULAR TOLERANCE ± .5°

NA FINISH
BREAK SHARP EDGES MAX. XX MIN. XX

OUTSTANDING ECN

Q.A. CATEGORY A-3		DATE
DRAWN BY	Ed Koropsak	10/15/98
CHECKED BY		
DESIGN APPROVAL		
ENGINEER APPROVAL	R. MICHNOFF	10/15/98
SUPVR. APPROVAL		

NEXT ASSEMBLY

BROOKHAVEN NATIONAL LABORATORY
UPTON, N.Y. 11973

RHIC CONTROLS WIRING DIAGRAM
1004B, VME CHASSIS CFE-4B-RTDL
BUS EXTENDERS

SIZE D
94028529
DRAWING NUMBER
REV. A

MATERIAL: ——— SCALE: NA WEIGHT: – SHEET 89 OF X

*AUTOCAD

REV.	ZONE	ECN NO.	DATE	BY	CKR	APP.

ACS, BNL 10/20/98 1:19 PM 8529_90.dwg

DEVICE: RTDL BUS EXTENDER
BLDG #: 1004B
RACK #: R04B05
CHASSIS ID: CFE-4B-RTDL
SLOT #: 14
A24 BASE ADDRESS: NA

DEVICE: RTDL BUS EXTENDER
BLDG #: 1004B
RACK #: R04B05
CHASSIS ID: CEX-4B-RTDL1
SLOT #: 4
A24 BASE ADDRESS: NA

DEVICE: RTDL BUS EXTENDER
BLDG #: 1004B
RACK #: R04B05
CHASSIS ID: CEX-4B-RTDL2
SLOT #: 4
A24 BASE ADDRESS: NA

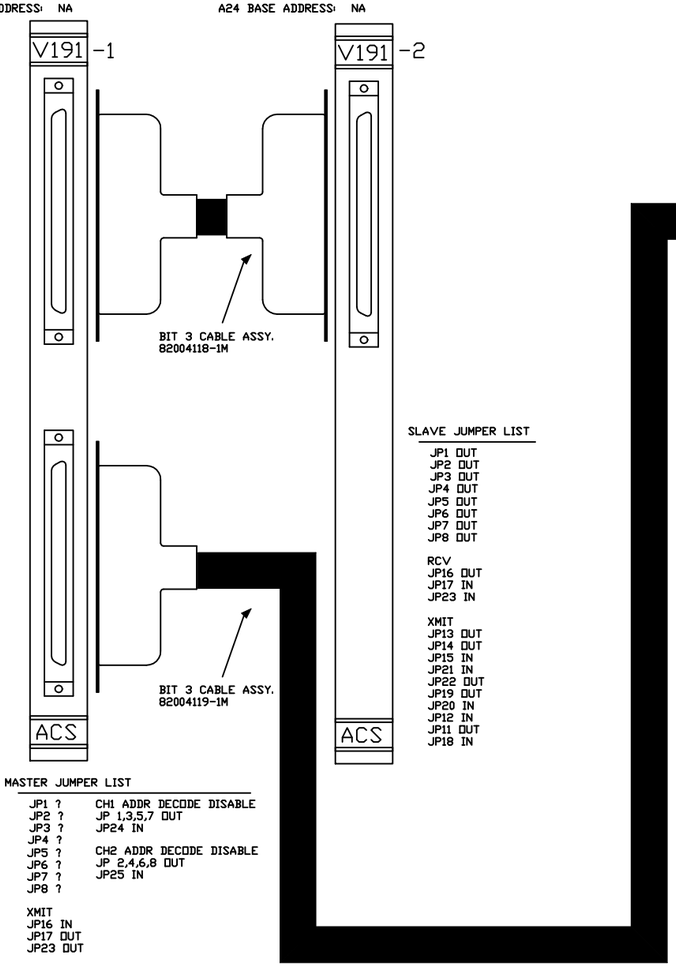

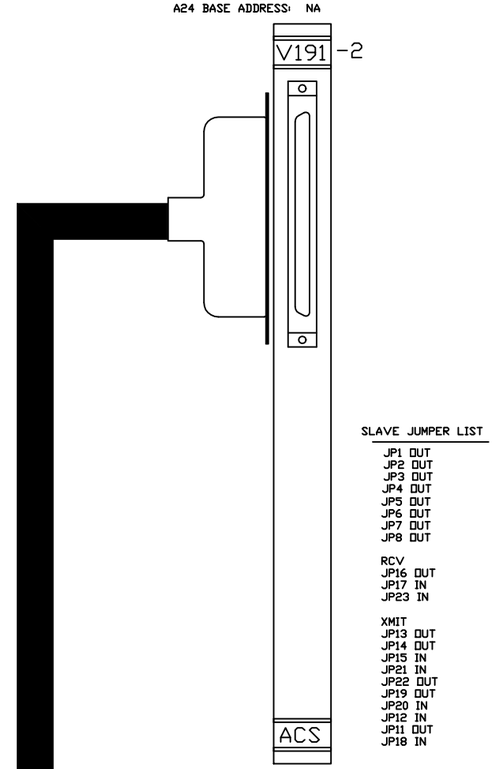

SLAVE JUMPER LIST

JP1 OUT
JP2 OUT
JP3 OUT
JP4 OUT
JP5 OUT
JP6 OUT
JP7 OUT
JP8 OUT

RCV
JP16 OUT
JP17 IN
JP23 IN

XMIT
JP13 OUT
JP14 OUT
JP15 IN
JP21 IN
JP22 OUT
JP19 OUT
JP20 IN
JP12 IN
JP11 OUT
JP18 IN

SLAVE JUMPER LIST

JP1 OUT
JP2 OUT
JP3 OUT
JP4 OUT
JP5 OUT
JP6 OUT
JP7 OUT
JP8 OUT

RCV
JP16 OUT
JP17 IN
JP23 IN

XMIT
JP13 OUT
JP14 OUT
JP15 IN
JP21 IN
JP22 OUT
JP19 OUT
JP20 IN
JP12 IN
JP11 OUT
JP18 IN

MASTER JUMPER LIST

JP1 ?
JP2 ?
JP3 ?
JP4 ?
JP5 ?
JP6 ?
JP7 ?
JP8 ?

CH1 ADDR DECODE DISABLE
JP 1,3,5,7 OUT
JP24 IN

CH2 ADDR DECODE DISABLE
JP 2,4,6,8 OUT
JP25 IN

XMIT
JP16 IN
JP17 OUT
JP23 OUT

RCV
JP13 IN
JP14 IN
JP15 OUT
JP21 OUT
JP22 IN
JP19 IN
JP20 OUT
JP12 OUT
JP11 IN
JP18 OUT

-3	-2	-1	REF DESIGNATOR	ITEM NO.	DESCRIPTION	MAT'L. DWG NO./INL NO.
QTY REQD						

INTERPRET IN GENERAL ACCORDANCE WITH ASME Y14.24M-1989

UNLESS OTHERWISE SPECIFIED DIMENSIONS ARE IN INCHES

DECIMAL TOLERANCES
X ±.030
.XX ±.015
.XXX ±.005
ANGULAR TOLERANCE
± .5°

NA FINISH

BREAK SHARP EDGES
MAX. XX MIN. XX

OUTSTANDING ECN

Q.A. CATEGORY A-3		DATE
DRAWN BY	Ed Koropsak	10/15/98
CHECKED BY		
DESIGN APPROVAL		
ENGINEER APPROVAL	R. MICHNOFF	10/15/98
SUPVR. APPROVAL		

NEXT ASSEMBLY

BROOKHAVEN NATIONAL LABORATORY
UPTON, N.Y. 11973

RHIC CONTROLS WIRING DIAGRAM
1004B, VME CHASSIS CFE-4B-RTDL
RTDL BUS EXTENDERS

SIZE D
94028529
DRAWING NUMBER
REV. A

MATERIAL: ——— SCALE: NA WEIGHT: – SHEET 90 OF X

*AUTOCAD

REV.	ZONE	ECN NO.	DATE	BY	CKR	APP.

ACS, BNL 1/28/00 2:50 PM 8529_91.dwg

FRONT END COMPUTER
BLDG #: 1004B
RACK #: R04B07
CHASSIS ID: CFE-4B-PS3
SLOT#: 1
FEC NAME: cfe-4b-ps3

DEVICE: MM-6702 MEMORY MODULE
BLDG #: 1004B
RACK #: R04B07
CHASSIS ID: CFE-4B-PS3
SLOT #: 2
A24 BASE ADDRESS: XXX

DEVICE: V108 UTILITY MODULE
BLDG #: 1004B
RACK #: R04B07
CHASSIS ID: CFE-4B-PS3
SLOT #: 3
A24 BASE ADDRESS: 0X--004000

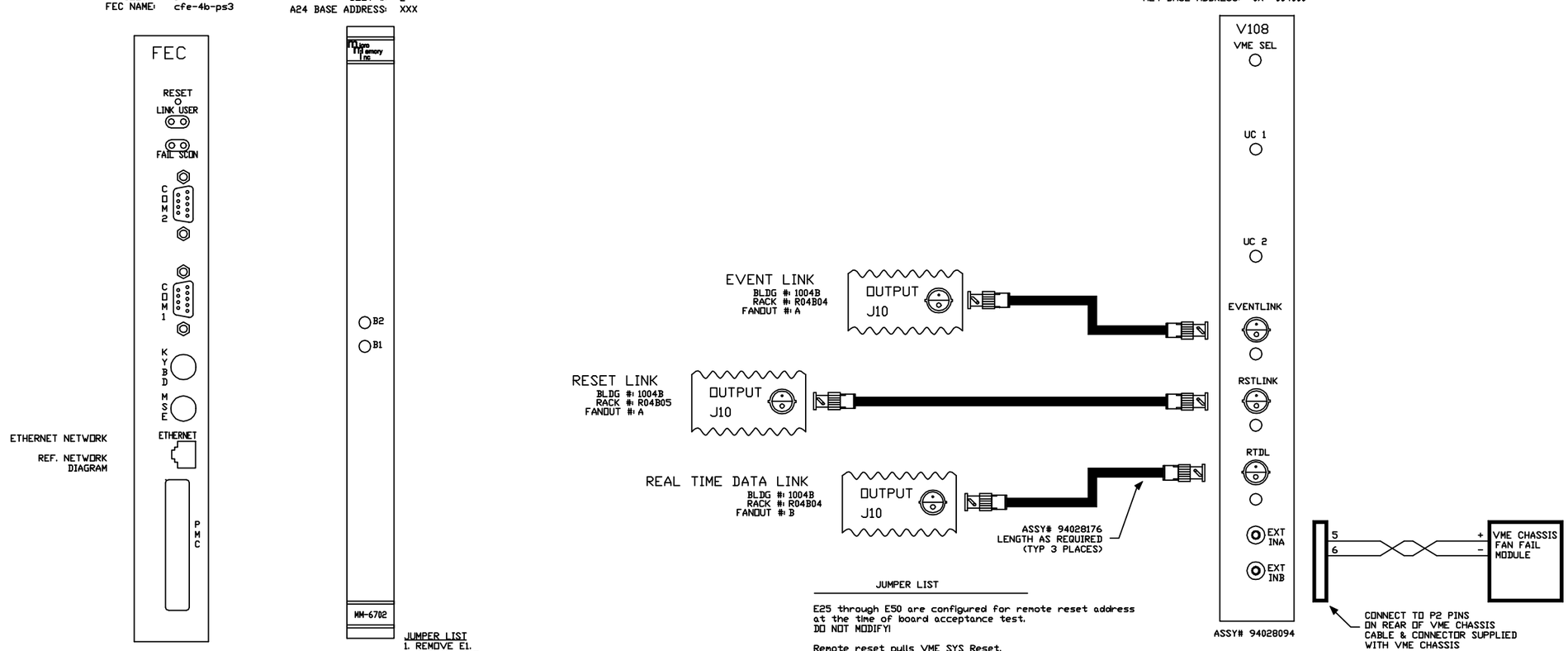

JUMPER LIST
1. REMOVE E1.
2. INSTALL E15.
3. SW3 CLOSE ALL POSITIONS.
4. SW2 CLOSE POSITIONS 7 AND 8.
5. SW1 CLOSE POSITIONS 2-8.
6. INSTALL E14 AND E25 TO ENABLE BATTERIES

JUMPER LIST

E25 through E50 are configured for remote reset address at the time of board acceptance test.
DO NOT MODIFY!

Remote reset pulls VME SYS Reset.
E58-E60, E59-E61

A24 BASE ADDRESS= 4000h
E57-E13, E2-E14, E3-E15, E4-E16, E5-E17, E6-E18
E7-E19, E8-E20, E9-E21, E10-E22, E11-E24, E57-E23
SW1=OPEN
SW2=CLOSED
SW3=OPEN
SW4=OPEN

-3	-2	-1	REF DESIGNATOR	ITEM NO.	DESCRIPTION	MAT'L DWG NO./BNL NO.
QTY REQD						

INTERPRET IN GENERAL ACCORDANCE WITH ASME Y14.24M-1989
UNLESS OTHERWISE SPECIFIED DIMENSIONS ARE IN INCHES
DECIMAL TOLERANCES .X ±.030 .XX ±.015 .XXX ±.005
ANGULAR TOLERANCE ± .5°
OUTSTANDING ECN
NA FINISH
BREAK SHARP EDGES MAX. XX MIN. XX

Q.A. CATEGORY A-3 DATE
DRAWN BY Ed Koropsak 10/15/98
CHECKED BY
DESIGN APPROVAL
ENGINEER APPROVAL R. MICHNOFF 10/15/98
SUPVR. APPROVAL
NEXT ASSEMBLY

BROOKHAVEN NATIONAL LABORATORY
UPTON, N.Y. 11973
RHIC CONTROLS WIRING DIAGRAM
1004B, VME CHASSIS CFE-4B-PS3
FT END COMP/V108 UTIL MODULE
SIZE D
94028529
REV. A
DRAWING NUMBER
MATERIAL: ——— SCALE: NA WEIGHT: – SHEET 91 / 108

*AUTOCAD

REV.	ZONE	ECN NO.	DATE	BY	CKR	APP.

ACS, BNL 1/28/00 2:51 PM 8529_92.dwg

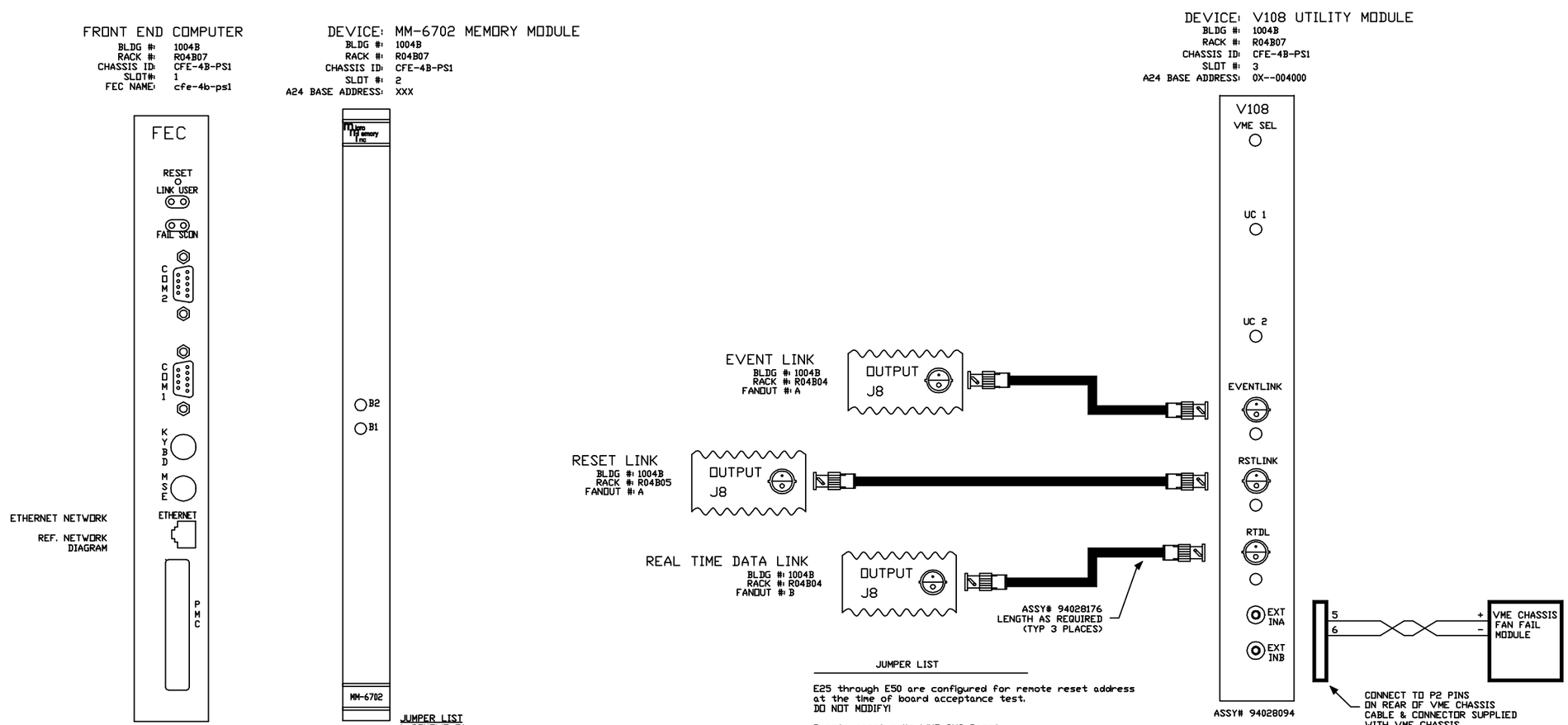

JUMPER LIST

1. REMOVE E1.
2. INSTALL E15.
3. SW3 CLOSE ALL POSITIONS.
4. SW2 CLOSE POSITIONS 7 AND 8.
5. SW1 CLOSE POSITIONS 2-8.
6. INSTALL E14 AND E25 TO ENABLE BATTERIES

JUMPER LIST

E25 through E50 are configured for remote reset address at the time of board acceptance test.
DO NOT MODIFY!

Remote reset pulls VME SYS Reset.
E58-E60, E59-E61

A24 BASE ADDRESS= 4000h
E57-E13, E2-E14, E3-E15, E4-E16, E5-E17, E6-E18
E7-E19, E8-E20, E9-E21, E10-E22, E11-E24, E57-E23
SW1=OPEN
SW2=CLOSED
SW3=OPEN
SW4=OPEN

-3	-2	-1	REF DESIGNATOR	ITEM NO.	DESCRIPTION	MAT'L DWG NO./BNL NO.
QTY REQD						

INTERPRET IN GENERAL ACCORDANCE WITH ASME Y14.24M-1989

UNLESS OTHERWISE SPECIFIED DIMENSIONS ARE IN INCHES

DECIMAL TOLERANCES
.X ±.030
.XX ±.015
.XXX ±.005
ANGULAR TOLERANCE
± .5°

OUTSTANDING ECN

NA FINISH

BREAK SHARP EDGES
MAX. XX MIN. XX

Q.A. CATEGORY A-3		DATE
DRAWN BY	Ed Koropsak	10/15/98
CHECKED BY		
DESIGN APPROVAL		
ENGINEER APPROVAL	R. MICHNOFF	10/15/98
SUPVR. APPROVAL		

NEXT ASSEMBLY

BROOKHAVEN NATIONAL LABORATORY
UPTON, N.Y. 11973

RHIC CONTROLS WIRING DIAGRAM
1004B, VME CHASSIS CFE-4B-PS1
FT END COMP/V108 UTIL MODULE

SIZE D | DRAWING NUMBER 94028529 | REV. A

MATERIAL: ——— SCALE: NA WEIGHT: – SHEET 92 / 108

1 *AUTOCAD

REV.	ZONE	ECN NO.	DATE	BY	CKR	APP.

CONTROLS- 4/3/01 1:57 PM 8529_93.dwg

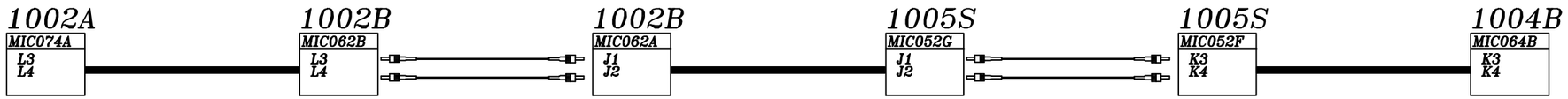

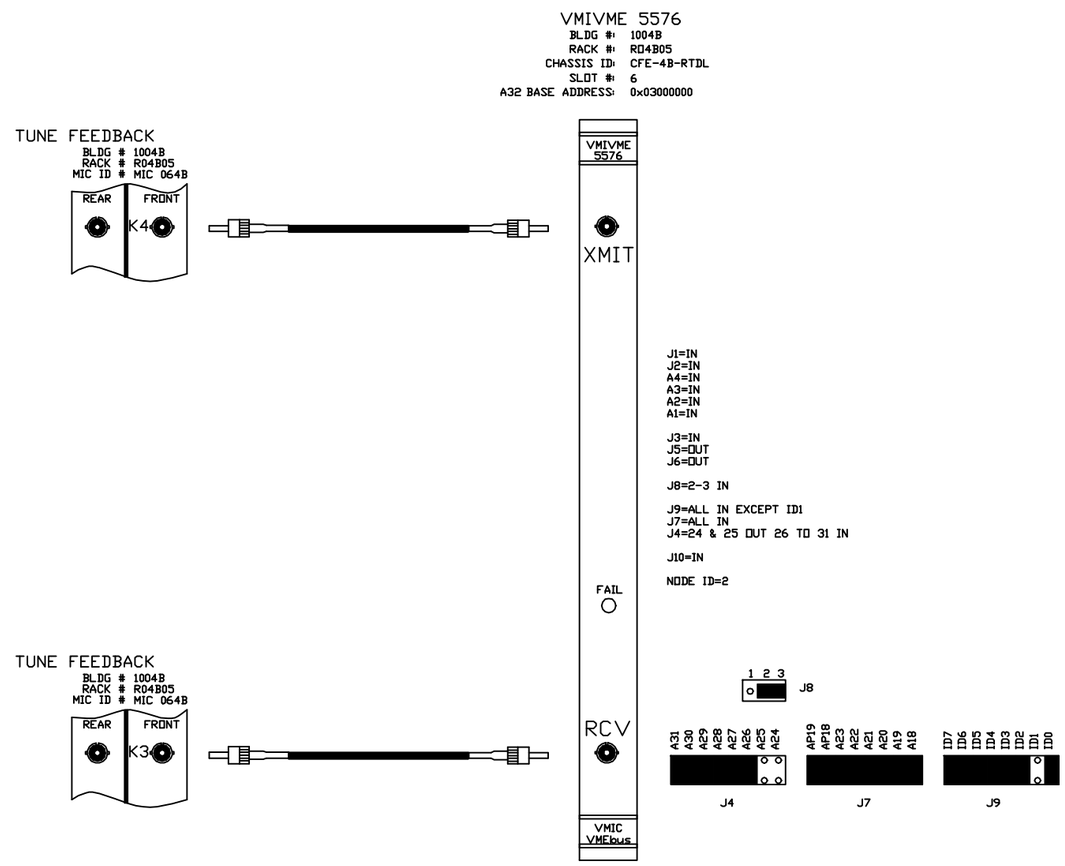

-3	-2	-1	REF DESIGNATOR	ITEM NO.	DESCRIPTION	MAT'L DWG NO.,BAR NO.
QTY REQD						

INTERPRET IN GENERAL ACCORDANCE WITH ASME Y14.24M-1989

UNLESS OTHERWISE SPECIFIED DIMENSIONS ARE IN INCHES

DECIMAL TOLERANCES
.X ±.030
.XX ±.015
.XXX ±.005
ANGULAR TOLERANCE
± .5°

OUTSTANDING ECN

NA FINISH

BREAK SHARP EDGES MAX. XX MIN. XX

		DATE
Q.A. CATEGORY A-3		
DRAWN BY	Ed Koropsak	3/27/01
CHECKED BY		
DESIGN APPROVAL		
ENGINEER APPROVAL	R. MICHNOFF	3/27/01
SUPVR. APPROVAL		

NEXT ASSEMBLY

BROOKHAVEN NATIONAL LABORATORY
UPTON, N.Y. 11973

RHIC CONTROLS WIRING DIAGRAM

BLDG. 1004B, RACK R04B05

TUNE FEEDBACK

SIZE D | DRAWING NUMBER 94028529 | REV. A

MATERIAL: ——— SCALE: NA WEIGHT: — SHEET 93

*AUTOCAD

REV.	ZONE	ECN NO.	DATE	BY	CKR	APP.

BNL 10/22/01 1:36 PM 8529_94.dwg

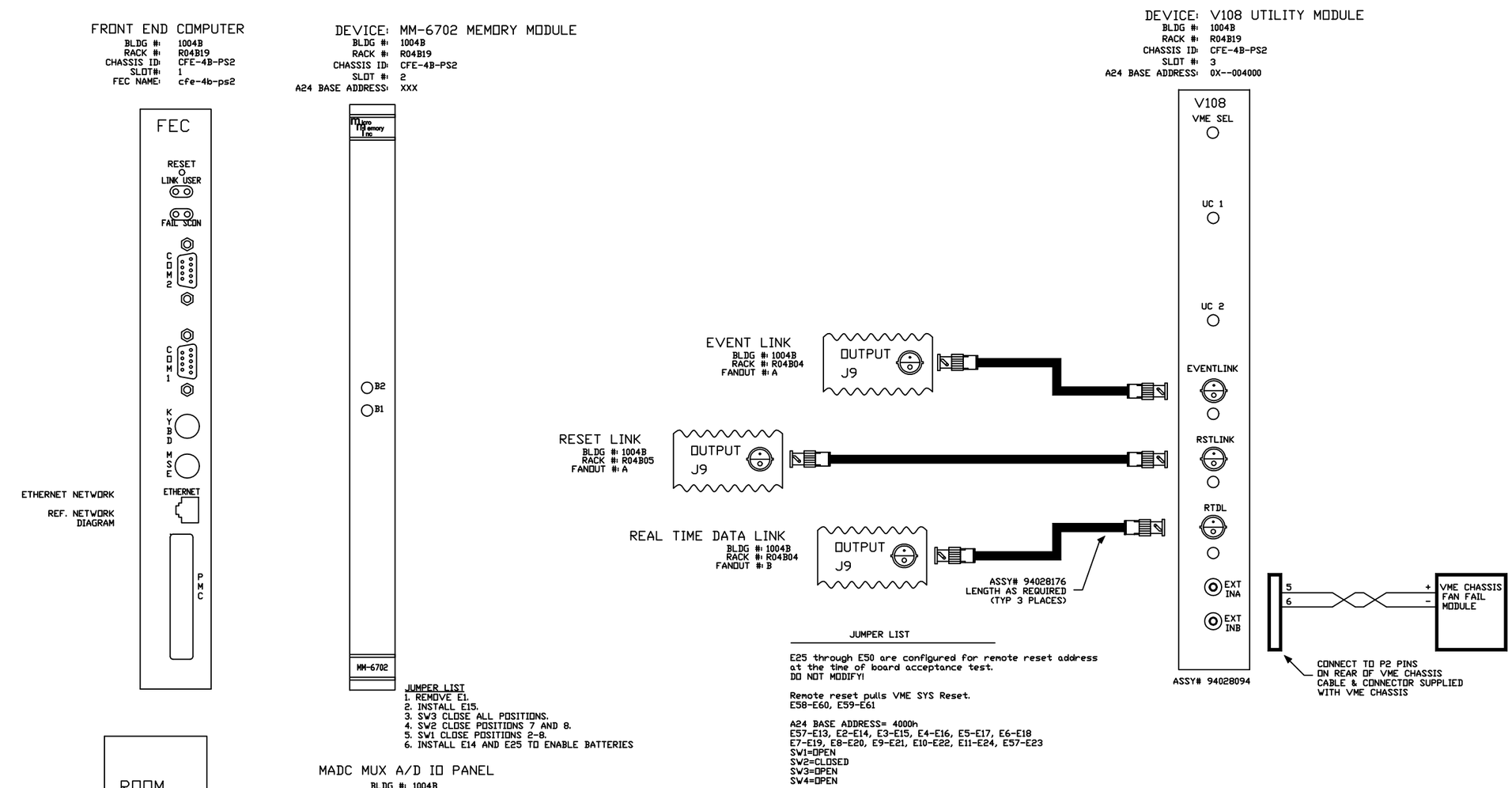

JUMPER LIST

1. REMOVE E1.
2. INSTALL E15.
3. SW3 CLOSE ALL POSITIONS.
4. SW2 CLOSE POSITIONS 7 AND 8.
5. SW1 CLOSE POSITIONS 2-8.
6. INSTALL E14 AND E25 TO ENABLE BATTERIES

JUMPER LIST

E25 through E50 are configured for remote reset address at the time of board acceptance test.
DO NOT MODIFY!

Remote reset pulls VME SYS Reset.
E58-E60, E59-E61

A24 BASE ADDRESS= 4000h
E57-E13, E2-E14, E3-E15, E4-E16, E5-E17, E6-E18
E7-E19, E8-E20, E9-E21, E10-E22, E11-E24, E57-E23
SW1=OPEN
SW2=CLOSED
SW3=OPEN
SW4=OPEN

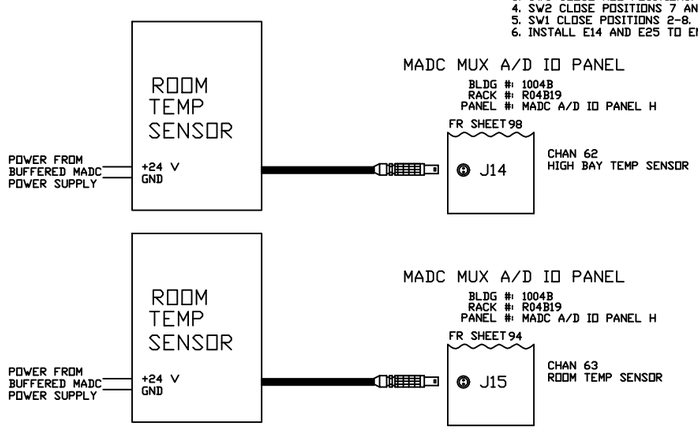

-3	-2	-1	REF DESIGNATOR	ITEM NO.	DESCRIPTION	MAT'L. DWG NO./BNL NO.
QTY REQD						

INTERPRET IN GENERAL ACCORDANCE WITH ASME Y14.24M-1989

UNLESS OTHERWISE SPECIFIED DIMENSIONS ARE IN INCHES
DECIMAL TOLERANCES
.X ±.030
.XX ±.015
.XXX ±.005
ANGULAR TOLERANCE ± .5°

NA FINISH — BREAK SHARP EDGES — MAX. XX MIN. XX

OUTSTANDING ECN

Q.A. CATEGORY A-3		DATE
DRAWN BY	Ed Koropsak	10/15/98
CHECKED BY		
DESIGN APPROVAL		
ENGINEER APPROVAL	R. MICHNOFF	10/15/98
SUPVR. APPROVAL		
NEXT ASSEMBLY		

BROOKHAVEN NATIONAL LABORATORY
UPTON, N.Y. 11973

RHIC CONTROLS WIRING DIAGRAM
1004B, VME CHASSIS CFE-4B-PS2
FT END COMP/V108 UTIL MODULE

SIZE D — DRAWING NUMBER 94028529 — REV. A

MATERIAL: ——— SCALE: NA WEIGHT: – SHEET 94 / 108

*AUTOCAD

REV.	ZONE	ECN NO.	DATE	BY	CKR	APP.

C-A, BNL 3/20/01 3:05 PM 8529_95.dwg

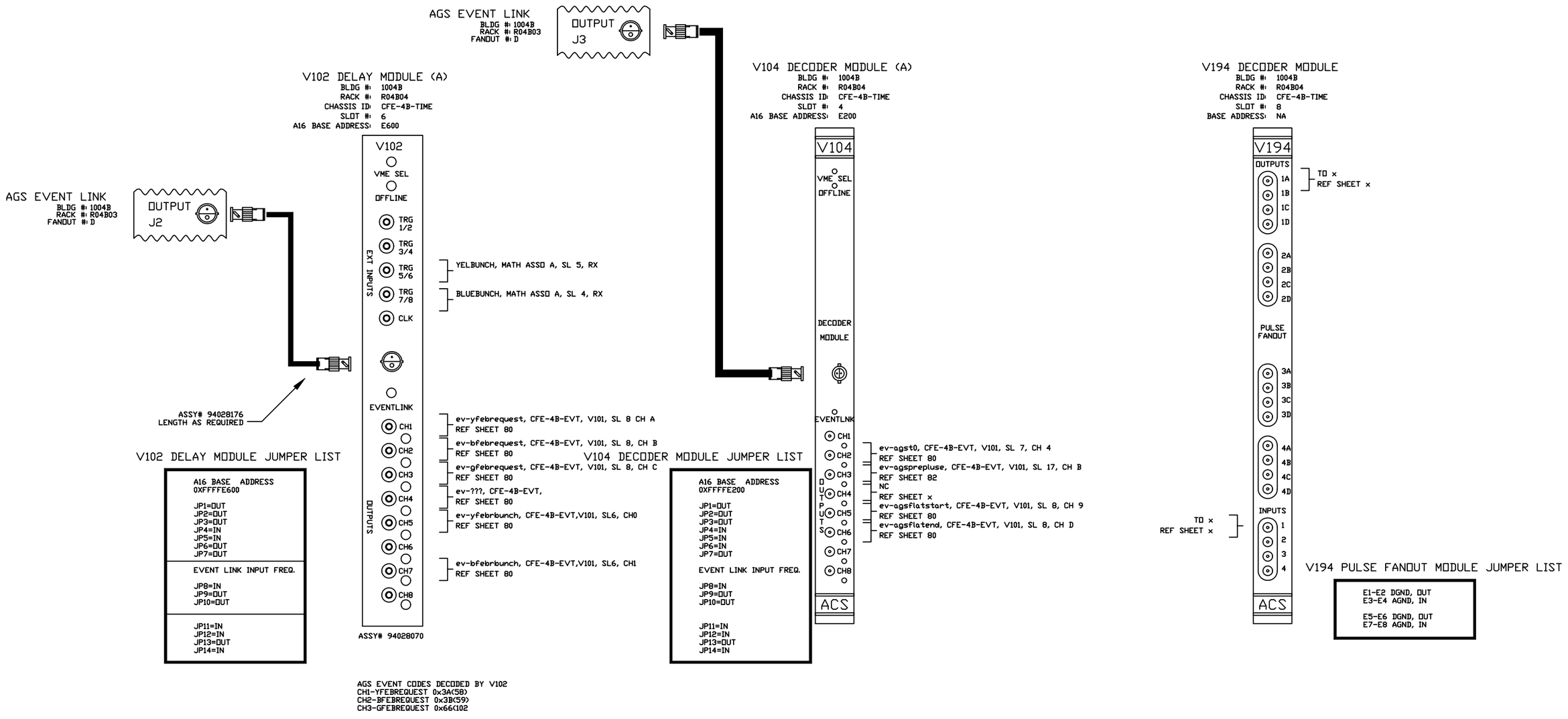

-3	-2	-1	REF DESIGNATOR	ITEM NO.	DESCRIPTION	MAT'L DWG NO./BNL NO.
QTY REQD						

INTERPRET IN GENERAL ACCORDANCE WITH ASME Y14.24M-1989	Q.A. CATEGORY A-3	DATE	BROOKHAVEN NATIONAL LABORATORY UPTON, N.Y. 11973
	DRAWN BY Ed Koropsak	10/15/98	
UNLESS OTHERWISE SPECIFIED DIMENSIONS ARE IN INCHES	CHECKED BY		RHIC CONTROLS WIRING DIAGRAM
DECIMAL TOLERANCES .X ±.030 .XX ±.015 .XXX ±.005 ANGULAR TOLERANCE ± .5°	DESIGN APPROVAL		BLDG. 1004B CHASSIS CFE-4B-TIME
	ENGINEER APPROVAL R. MICHNOFF	10/15/98	V102, V104, 194 AGS MODULES
	SUPVR. APPROVAL		SIZE D — 94028529 — REV. A
NA FINISH	BREAK SHARP EDGES MAX. XX MIN. XX	NEXT ASSEMBLY	DRAWING NUMBER
OUTSTANDING ECN			MATERIAL: ——— SCALE: NA WEIGHT: – SHEET 95

1 *AUTOCAD

C-A, BNL 3/20/01 3:10 PM 8529_96.dwg

REV.	ZONE	ECN NO.	DATE	BY	CKR	APP.

V102 DELAY MODULE (C)

BLDG #: 1004B
RACK #: R04B04
CHASSIS ID: CFE-4B-TIME
SLOT #: 13
A16 BASE ADDRESS: EA00

RHIC EVENT LINK
BLDG #: 1004B
RACK #: R04B04
FANOUT #: B

OUTPUT J5

ASSY# 94028176
LENGTH AS REQUIRED

V102
VME SEL
OFFLINE
EXT INPUTS: TRG 1/2, TRG 3/4, TRG 5/6, TRG 7/8, CLK
EVENTLINK
OUTPUTS: CH1, CH2, CH3, CH4, CH5, CH6, CH7, CH8

ASSY# 94028070

- ev-brffeedback,CFE-4B-EVT, SL17, CH1 — REF SHEET 82
- ev-ygammat,CFE-4B-EVT, SL17, CH3 — REF SHEET 82
- ev-bgammat,CFE-4B-EVT, SL17, CH4 — REF SHEET 82
- ev-yrffeedback,CFE-4B-EVT, SL20, CH4 — REF SHEET 83
- ev-bdump,CFE-4B-EVT, SL12, CH7 — REF SHEET 81
- ev-ydump,CFE-4B-EVT, SL12, CHB — REF SHEET 81
- ev-bpostmortem,CFE-4B-EVT, SL16, CH8 — REF SHEET 82
- ev-ypostmortem,CFE-4B-EVT, SL16, CH9 — REF SHEET 82

V102 DELAY MODULE JUMPER LIST

A16 BASE ADDRESS
0XFFFFEA00

JP1=OUT
JP2=OUT
JP3=OUT
JP4=IN
JP5=OUT
JP6=IN
JP7=OUT

EVENT LINK INPUT FREQ.

JP8=IN
JP9=OUT
JP10=OUT

JP11=IN
JP12=IN
JP13=OUT
JP14=IN

V102 DELAY MODULE (B)

BLDG #: 1004B
RACK #: R04B04
CHASSIS ID: CFE-4B-TIME
SLOT #: 12
A16
A16 BASE ADDRESS: E800

RHIC EVENT LINK
BLDG #: 1004B
RACK #: R04B04
FANOUT #: B

OUTPUT J6

ASSY# 94028176
LENGTH AS REQUIRED

V102
VME SEL
OFFLINE
EXT INPUTS: TRG 1/2, TRG 3/4, TRG 5/6, TRG 7/8, CLK
EVENTLINK
OUTPUTS: CH1, CH2, CH3, CH4, CH5, CH6, CH7, CH8

ASSY# 94028070

- ev-pool1,CFE-4B-EVT, SL17, CHF — REF SHEET 82
- ev-pool2,CFE-4B-EVT, SL18, CH0 — REF SHEET 83
- ev-pool3,CFE-4B-EVT, SL18, CH1 — REF SHEET 83
- ev-pool4,CFE-4B-EVT, SL18, CH2 — REF SHEET 83
- ev-pool5,CFE-4B-EVT, SL18, CH3 — REF SHEET 83
- ev-presnapshot,CFE-4B-EVT, SL9, CHB — REF SHEET 80
- ev-snapshot,CFE-4B-EVT, SL12, CH8 — REF SHEET 81
- ev-pool8,CFE-4B-EVT, SL18, CH6 — REF SHEET 83

V102 DELAY MODULE JUMPER LIST

A16 BASE ADDRESS
0XFFFFE800

JP1=OUT
JP2=OUT
JP3=OUT
JP4=IN
JP5=OUT
JP6=IN
JP7=IN

EVENT LINK INPUT FREQ.

JP8=IN
JP9=OUT
JP10=OUT

JP11=IN
JP12=IN
JP13=OUT
JP14=IN

V194 DECODER MODULE

BLDG #: 1004B
RACK #: R04B04
CHASSIS ID: CFE-4B-TIME
SLOT #: 8
BASE ADDRESS: NA

V194

OUTPUTS: 1A, 1B, 1C, 1D
- TO V107, 720 Hz INPUT, CFE-4B-RTDL, SL 5 — REF SHEET 21

2A, 2B, 2C, 2D
- TO CFE-4B-EVT, V101, SL 10 CH 8 — REF SHEET 81

PULSE FANOUT: 3A, 3B, 3C, 3D, 4A, 4B, 4C, 4D

INPUTS: 1, 2, 3, 4
- 720 Hz FROM POWER SUPPLY — REF SHEET x
- 720 Hz OUT FROM V107, CFE-4B-RTDL — REF SHEET 21

ACS

V194 PULSE FANOUT MODULE JUMPER LIST

E1-E2 DGND, OUT
E3-E4 AGND, IN

E5-E6 DGND, OUT
E7-E8 AGND, IN

-3	-2	-1	REF DESIGNATOR	ITEM NO.	DESCRIPTION	MAT'L DWG NO.,BNL NO.
QTY REQD						

INTERPRET IN GENERAL ACCORDANCE WITH ASME Y14.24M-1989

UNLESS OTHERWISE SPECIFIED DIMENSIONS ARE IN INCHES

DECIMAL TOLERANCES
.X ±.030
.XX ±.015
.XXX ±.005
ANGULAR TOLERANCE
± .5°

NA FINISH

BREAK SHARP EDGES
MAX. XX MIN. XX

OUTSTANDING ECN

Q.A. CATEGORY A-3		DATE
DRAWN BY	Ed Koropsak	10/15/98
CHECKED BY		
DESIGN APPROVAL		
ENGINEER APPROVAL	R. MICHNOFF	10/15/98
SUPVR. APPROVAL		

NEXT ASSEMBLY

BROOKHAVEN NATIONAL LABORATORY
UPTON, N.Y. 11973

RHIC CONTROLS WIRING DIAGRAM

BLDG. 1004B CHASSIS CFE-4B-TIME

V102, 194 RHIC MODULES

SIZE: D
DRAWING NUMBER: 94028529
REV.: A

MATERIAL: ——— SCALE: NA WEIGHT: – SHEET 96

*AUTOCAD

REV.	ZONE	ECN NO.	DATE	BY	CKR	APP.

C-A, BNL 3/20/01 3:30 PM 8529_97.dwg

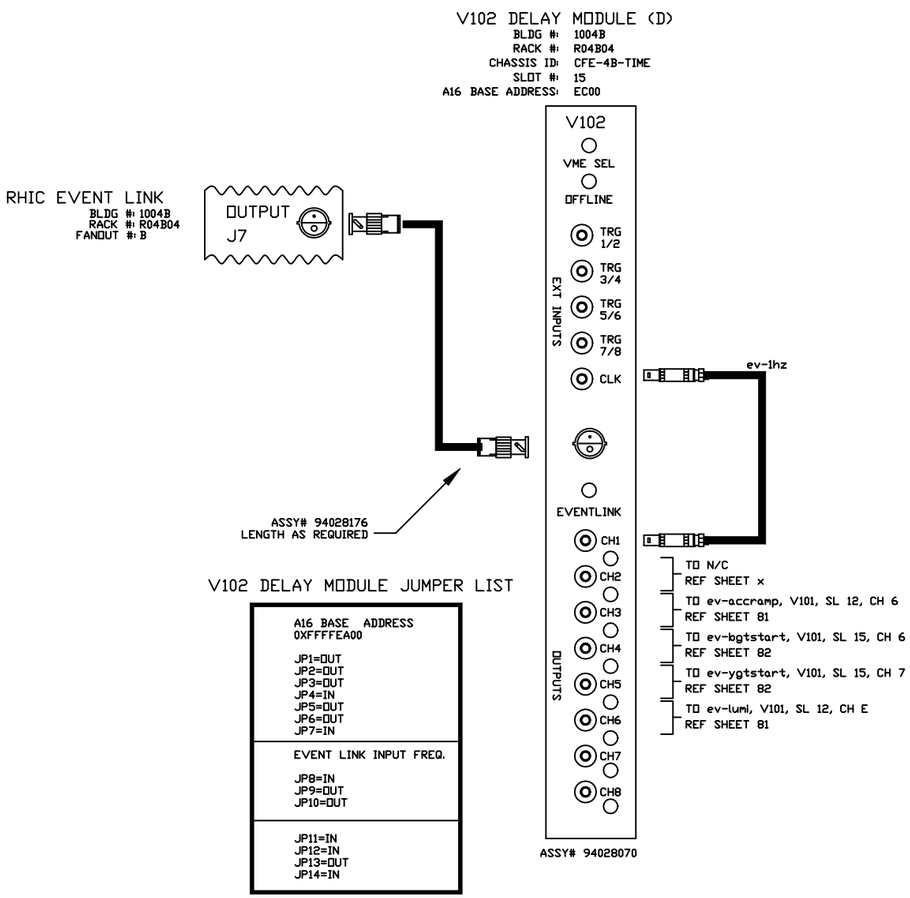

V102 DELAY MODULE JUMPER LIST

A16 BASE ADDRESS 0XFFFFEA00 JP1=OUT JP2=OUT JP3=OUT JP4=IN JP5=OUT JP6=OUT JP7=IN
EVENT LINK INPUT FREQ. JP8=IN JP9=OUT JP10=OUT
JP11=IN JP12=IN JP13=OUT JP14=IN

-3	-2	-1	REF DESIGNATOR	ITEM NO.	DESCRIPTION	MAT'L DWG NO.,BNL NO.
QTY REQD						

INTERPRET IN GENERAL ACCORDANCE WITH ASME Y14.24M-1989

UNLESS OTHERWISE SPECIFIED DIMENSIONS ARE IN INCHES

DECIMAL TOLERANCES
.X ±.030
.XX ±.015
.XXX ±.005
ANGULAR TOLERANCE
± .5°

OUTSTANDING ECN

NA FINISH

BREAK SHARP EDGES
MAX. XX MIN. XX

Q.A. CATEGORY A-3		DATE
DRAWN BY	Ed Koropsak	10/15/98
CHECKED BY		
DESIGN APPROVAL		
ENGINEER APPROVAL	R. MICHNOFF	10/15/98
SUPVR. APPROVAL		

NEXT ASSEMBLY

BROOKHAVEN NATIONAL LABORATORY
UPTON, N.Y. 11973

RHIC CONTROLS WIRING DIAGRAM

BLDG. 1004B CHASSIS CFE-4B-TIME

V102 RHIC MODULES

SIZE D | DRAWING NUMBER 94028529 | REV. A

MATERIAL: ——— SCALE: NA WEIGHT: – SHEET 97

*AUTOCAD

REV.	ZONE	ECN NO.	DATE	BY	CKR	APP.

BNL 10/22/01 1:26 PM 8529_98.dwg

MADC MUX A/D IO PANEL
BLDG #: 1004B
RACK #: R04B07
PANEL #: MADC A/D IO PANEL F

FR SHEET 64

J12	CHAN 28 POWER SUPPLY
J13	CHAN 29 POWER SUPPLY
J14	CHAN 30 POWER SUPPLY
J15	CHAN 31 POWER SUPPLY

MADC MUX A/D IO PANEL
BLDG #: 1004B
RACK #: R04B19
PANEL #: MADC A/D IO PANEL F

FR SHEET 78

J12	CHAN 28 POWER SUPPLY
J13	CHAN 29 POWER SUPPLY
J14	CHAN 30 POWER SUPPLY
J15	CHAN 31 POWER SUPPLY

MADC MUX A/D IO PANEL
BLDG #: 1004B
RACK #: R04B19
PANEL #: MADC A/D IO PANEL H

FR SHEET 66

J0	CHAN 48 POWER SUPPLY XXX SETPOINT XXXX
J1	CHAN 49 POWER SUPPLY XXX SETPOINT XXXX
J2	CHAN 50 POWER SUPPLY XXX SETPOINT XXXX
J3	CHAN 51 POWER SUPPLY XXX SETPOINT XXXX

TO SHEET 98

MADC MUX A/D IO PANEL
BLDG #: 1004B
RACK #: R04B19
PANEL #: MADC A/D IO PANEL H

FR SHEET 98

J8	CHAN 56 POWER SUPPLY XXX SETPOINT XXXX
J9	CHAN 57 POWER SUPPLY XXX SETPOINT XXXX
J10	CHAN 58 POWER SUPPLY XXX SETPOINT XXXX
J11	CHAN 59 POWER SUPPLY XXX SETPOINT XXXX

TO SHEET 98

MADC MUX A/D IO PANEL
BLDG #: 1004B
RACK #: R04B07
PANEL #: MADC A/D IO PANEL H

FR SHEET 100

J12	CHAN 60 POWER SUPPLY
J13	CHAN 61 POWER SUPPLY
J14	CHAN 62 POWER SUPPLY
J15	CHAN 63 POWER SUPPLY

MADC MUX A/D IO PANEL
BLDG #: 1004B
RACK #: R04B19
PANEL #: MADC A/D IO PANEL H

FR SHEET 98

J4	CHAN 52 POWER SUPPLY XXX SETPOINT XXXX
J5	CHAN 53 POWER SUPPLY XXX SETPOINT XXXX
J6	CHAN 54 POWER SUPPLY XXX SETPOINT XXXX
J7	CHAN 55 POWER SUPPLY XXX SETPOINT XXXX

TO SHEET 98

MADC MUX A/D IO PANEL
BLDG #: 1004B
RACK #: R04B19
PANEL #: MADC A/D IO PANEL H

FR SHEET 98

J12	CHAN 60 POWER SUPPLY XXX
J13	CHAN 61 POWER SUPPLY XXX

TO SHEET 94

-3	-2	-1	REF DESIGNATOR	ITEM NO.	DESCRIPTION	MAT'L. DWG NO.,BNL NO.
QTY REQD						

INTERPRET IN GENERAL ACCORDANCE WITH ASME Y14.24M-1989

UNLESS OTHERWISE SPECIFIED DIMENSIONS ARE IN INCHES

DECIMAL TOLERANCES
.X ±.030
.XX ±.015
.XXX ±.005
ANGULAR TOLERANCE ± .5°

NA FINISH

BREAK SHARP EDGES MAX. XX MIN. XX

OUTSTANDING ECN

Q.A. CATEGORY A-3		DATE
DRAWN BY	Ed Koropsak	10/9/98
CHECKED BY		
DESIGN APPROVAL		
ENGINEER APPROVAL	R.MICHNOFF	10/9/98
SUPVR. APPROVAL		
NEXT ASSEMBLY		

BROOKHAVEN NATIONAL LABORATORY
UPTON, N.Y. 11973

RHIC CONTROLS WIRING DIAGRAM
BLDG. 1004B

SPARE MADC CHANNELS

SIZE D — DRAWING NUMBER 94028529 — REV. A

MATERIAL: ——— SCALE: NA WEIGHT: – SHEET 98 OF X

*AUTOCAD

REV.	ZONE	ECN NO.	DATE	BY	CKR	APP.

ACS, BNL 10/20/98 1:32 PM 8529_99.dwg

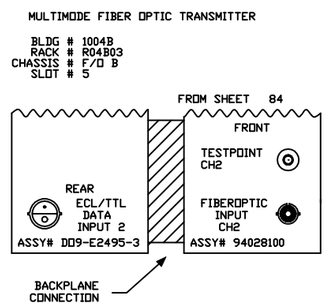

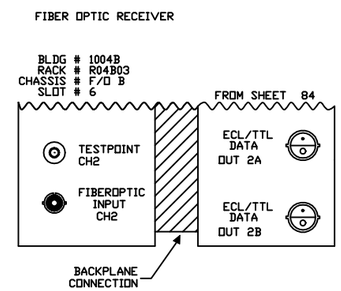

-3	-2	-1	REF DESIGNATOR	ITEM NO.	DESCRIPTION	MAT'L. DWG NO.,BNL NO.
QTY REQD						

INTERPRET IN GENERAL ACCORDANCE WITH ASME Y14.24M-1989

UNLESS OTHERWISE SPECIFIED DIMENSIONS ARE IN INCHES

DECIMAL TOLERANCES
.X ±.030
.XX ±.015
.XXX ±.005
ANGULAR TOLERANCE
± .5°

NA FINISH

BREAK SHARP EDGES
MAX. XX MIN. XX

OUTSTANDING ECN

Q.A. CATEGORY A-3		DATE
DRAWN BY	Ed Koropsak	10/9/98
CHECKED BY		
DESIGN APPROVAL		
ENGINEER APPROVAL	R. MICHNOFF	10/9/98
SUPVR. APPROVAL		
NEXT ASSEMBLY		

BROOKHAVEN NATIONAL LABORATORY
UPTON, N.Y. 11973

RHIC CONTROLS WIRING DIAGRAM
SERVICE BLDG. 1004B

SPARE F/O RCVR/XMIT CHANNELS

SIZE D | DRAWING NUMBER 94028529 | REV. A

MATERIAL: ——— SCALE: NA WEIGHT: – SHEET 99 OF X

*AUTOCAD

REV.	ZONE	ECN NO.	DATE	BY	CKR	APP.

C-A, BNL 5/8/01 11:31 AM 8529_100.dwg

DX Heater PS MADC Readbacks

MADC MUX A/D IO PANEL
BLDG #: 1004B
RACK #: R04B07
PANEL #: MADC A/D IO PANEL H

FR SHEET 52

- J0 — CHAN 48, POWER SUPPLY 1004B-3-1-A2, VOLTAGE, g3-dxh-hta
- J1 — CHAN 49, POWER SUPPLY 1004B-3-1-A2, CURRENT, g3-dxh-hta
- J2 — CHAN 50, POWER SUPPLY 1004B-3-1-A2, GND CURRENT, g3-dxh-hta

TO SHEET 100

MADC MUX A/D IO PANEL
BLDG #: 1004B
RACK #: R04B07
PANEL #: MADC A/D IO PANEL H

FR SHEET 100

- J6 — CHAN 54, POWER SUPPLY 1004B-4-1-A1, VOLTAGE, g4-dxh-hta
- J7 — CHAN 55, POWER SUPPLY 1004B-4-1-A1, CURRENT, g4-dxh-hta
- J8 — CHAN 56, POWER SUPPLY 1004B-4-1-A1, GND CURRENT, g4-dxh-hta

TO SHEET 100

MADC MUX A/D IO PANEL
BLDG #: 1004B
RACK #: R04B07
PANEL #: MADC A/D IO PANEL H

FR SHEET 100

- J3 — CHAN 51, POWER SUPPLY 1004B-3-2-B2, VOLTAGE, g3-dxh-htb
- J4 — CHAN 52, POWER SUPPLY 1004B-3-2-B2, CURRENT, g3-dxh-htb
- J5 — CHAN 53, POWER SUPPLY 1004B-3-2-B2, GND CURRENT, g3-dxh-htb

TO SHEET 100

MADC MUX A/D IO PANEL
BLDG #: 1004B
RACK #: R04B07
PANEL #: MADC A/D IO PANEL H

FR SHEET 100

- J9 — CHAN 57, POWER SUPPLY 1004B-4-2-B1, VOLTAGE, g4-dxh-htb
- J10 — CHAN 58, POWER SUPPLY 1004B-4-2-B1, CURRENT, g4-dxh-htb
- J11 — CHAN 59, POWER SUPPLY 1004B-4-2-B1, GND CURRENT, g4-dxh-htb

TO SHEET 98

-3	-2	-1	REF DESIGNATOR	ITEM NO.	DESCRIPTION	MAT'L. DWG NO.,BNL NO.
QTY REQD						

INTERPRET IN GENERAL ACCORDANCE WITH ASME Y14.24M-1989

UNLESS OTHERWISE SPECIFIED DIMENSIONS ARE IN INCHES

DECIMAL TOLERANCES
.X ±.030
.XX ±.015
.XXX ±.005
ANGULAR TOLERANCE ± .5°

NA FINISH — BREAK SHARP EDGES MAX. XX MIN. XX

OUTSTANDING ECN

Q.A. CATEGORY A-3		DATE
DRAWN BY	Ed Koropsak	10/16/98
CHECKED BY		
DESIGN APPROVAL		
ENGINEER APPROVAL	R. MICHNOFF	10/16/98
SUPVR. APPROVAL		
NEXT ASSEMBLY		

BROOKHAVEN NATIONAL LABORATORY
UPTON, N.Y. 11973

RHIC CONTROLS WIRING DIAGRAM

BLDG. 1004B CHASSIS CFE-4B-PS1

DX Heater PS MADC Readbacks

SIZE D — DRAWING NUMBER 94028529 — REV. A

MATERIAL: ——— SCALE: NA WEIGHT: – SHEET 100

*AUTOCAD

REV.	ZONE	ECN NO.	DATE	BY	CKR	APP.

ACS, BNL 1/28/00 2:56 PM 8529_102.dwg

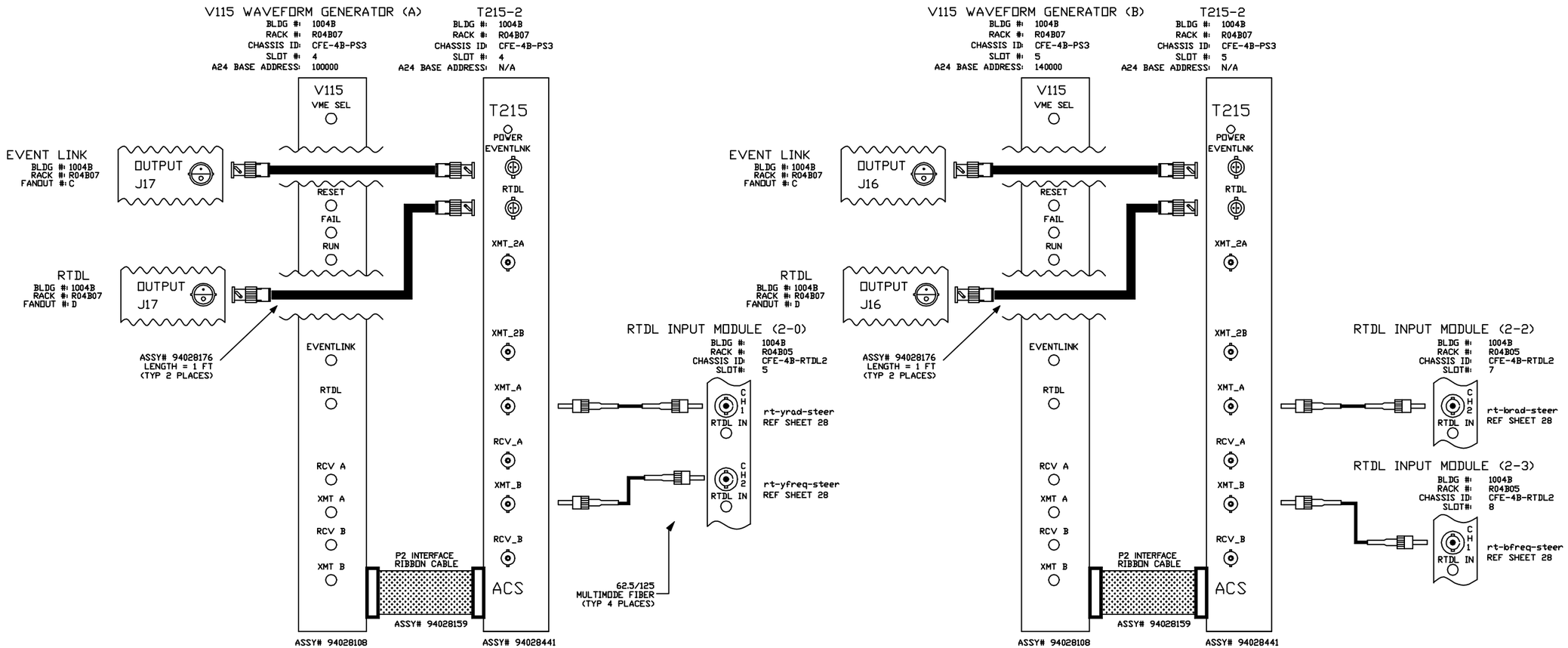

V115 JUMPER LIST

JP3=IN
JP4=IN
JP1=OUT
JP2=OUT

A24 BASE ADDRESS
JB1-A23=IN
JB1-A22=IN
JB1-A21=IN
JB1-A20=OUT
JB1-A19=IN
JB1-A18=IN

V115 JUMPER LIST

JP3=IN
JP4=IN
JP1=OUT
JP2=OUT

A24 BASE ADDRESS
JB1-A23=IN
JB1-A22=IN
JB1-A21=IN
JB1-A20=OUT
JB1-A19=IN
JB1-A18=OUT

-3	-2	-1	REF DESIGNATOR	ITEM NO.	DESCRIPTION	MAT'L DWG NO./BNL NO.
QTY REQD						

INTERPRET IN GENERAL ACCORDANCE WITH ASME Y14.24M-1989

UNLESS OTHERWISE SPECIFIED DIMENSIONS ARE IN INCHES

DECIMAL TOLERANCES
.X ±.030
.XX ±.015
.XXX ±.005
ANGULAR TOLERANCE ± .5°

OUTSTANDING ECN

NA FINISH

BREAK SHARP EDGES MAX. XX MIN. XX

Q.A. CATEGORY A-3		DATE
DRAWN BY	Ed Koropsak	1/5/99
CHECKED BY		
DESIGN APPROVAL		
ENGINEER APPROVAL	R.MICHNOFF	1/5/99
SUPVR. APPROVAL		
NEXT ASSEMBLY		

BROOKHAVEN NATIONAL LABORATORY
UPTON, N.Y. 11973

RHIC CONTROLS WIRING DIAGRAM
BLDG. 1004B, CFE-4B-PS3

RTDL INPUTS rad, freq-steer

SIZE D — DRAWING NUMBER 94028529 — REV. A

MATERIAL: ——— SCALE: NA WEIGHT: – SHEET 102 /108

1 *AUTOCAD

ACS, BNL 1/28/00 2:57 PM 8529_103.dwg

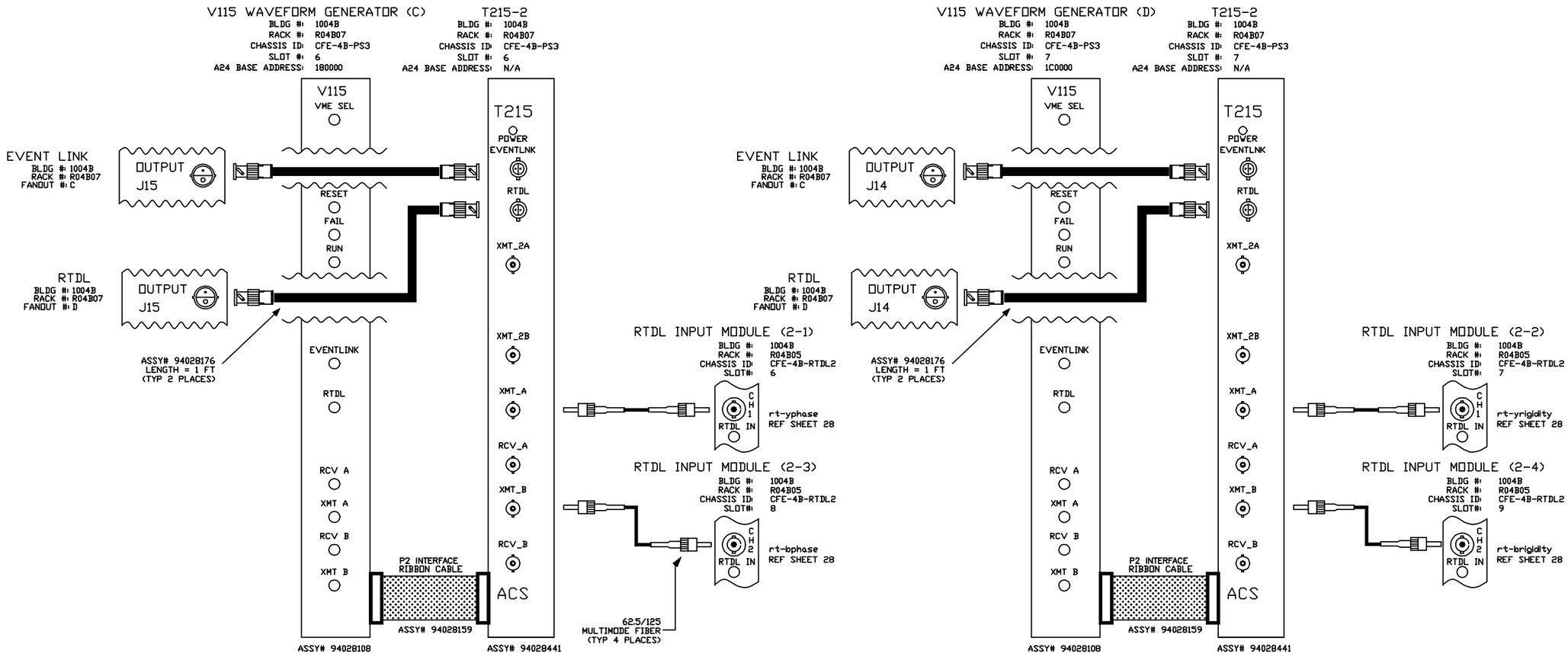

V115 JUMPER LIST
JP3=IN JP4=IN JP1=OUT JP2=OUT
A24 BASE ADDRESS JB1-A23=IN JB1-A22=IN JB1-A21=IN JB1-A20=OUT JB1-A19=OUT JB1-A18=IN

V115 JUMPER LIST
JP3=IN JP4=IN JP1=OUT JP2=OUT
A24 BASE ADDRESS JB1-A23=IN JB1-A22=IN JB1-A21=IN JB1-A20=OUT JB1-A19=OUT JB1-A18=OUT

-3	-2	-1	REF DESIGNATOR	ITEM NO.	DESCRIPTION	MAT'L DWG NO./BNL NO.
QTY REQD						

INTERPRET IN GENERAL ACCORDANCE WITH ASME Y14.24M-1989

UNLESS OTHERWISE SPECIFIED DIMENSIONS ARE IN INCHES

DECIMAL TOLERANCES
.X ±.030
.XX ±.015
.XXX ±.005
ANGULAR TOLERANCE
± .5°

OUTSTANDING ECN

NA FINISH

BREAK SHARP EDGES
MAX. XX MIN. XX

Q.A. CATEGORY A-3		DATE
DRAWN BY	Ed Koropsak	1/5/99
CHECKED BY		
DESIGN APPROVAL		
ENGINEER APPROVAL	R.MICHNOFF	1/5/99
SUPVR. APPROVAL		
NEXT ASSEMBLY		

BROOKHAVEN NATIONAL LABORATORY
UPTON, N.Y. 11973

RHIC CONTROLS WIRING DIAGRAM
BLDG. 1004B, CFE-4B-PS3

RTDL INPUTS phase, rigidity

SIZE D | DRAWING NUMBER 94028529 | REV. A

MATERIAL: ——— SCALE: NA WEIGHT: – SHEET 103 /108

*AUTOCAD

REV.	ZONE	ECN NO.	DATE	BY	CKR	APP.

ACS, BNL 1/28/00 2:59 PM 8529_104.dwg

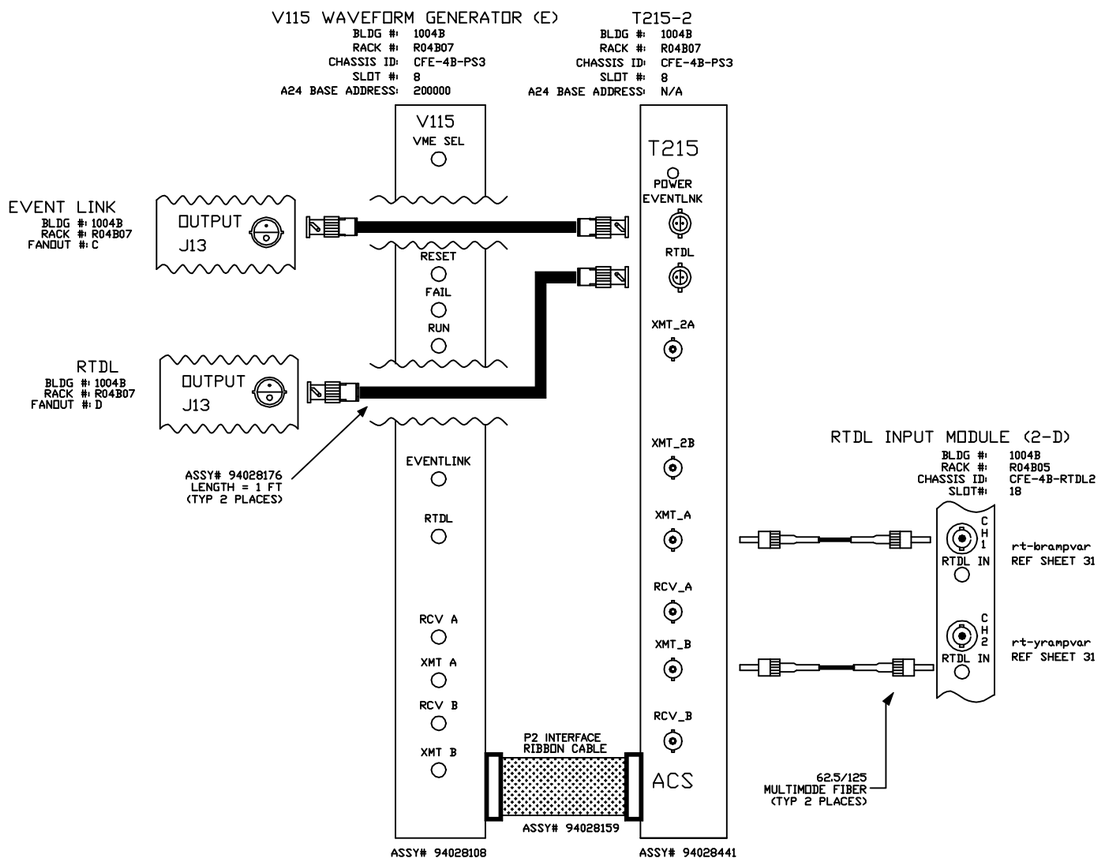

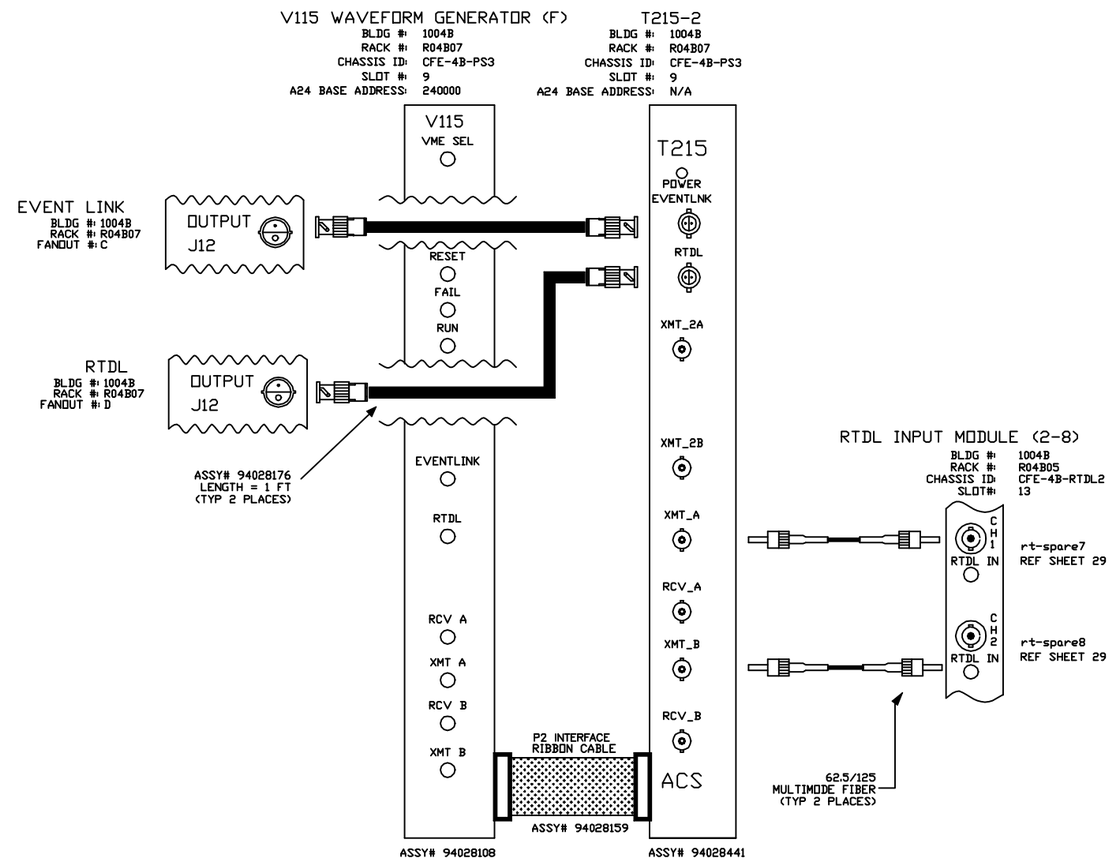

V115 JUMPER LIST
JP3=IN JP4=IN JP1=OUT JP2=OUT
A24 BASE ADDRESS JB1-A23=IN JB1-A22=IN JB1-A21=OUT JB1-A20=IN JB1-A19=IN JB1-A18=IN

V115 JUMPER LIST
JP3=IN JP4=IN JP1=OUT JP2=OUT
A24 BASE ADDRESS JB1-A23=IN JB1-A22=IN JB1-A21=OUT JB1-A20=IN JB1-A19=IN JB1-A18=OUT

-3	-2	-1	REF DESIGNATOR	ITEM NO.	DESCRIPTION	MAT'L DWG NO./INL NO.
QTY REQD						

INTERPRET IN GENERAL ACCORDANCE WITH ASME Y14.24M-1989

UNLESS OTHERWISE SPECIFIED DIMENSIONS ARE IN INCHES

DECIMAL TOLERANCES
.X ±.030
.XX ±.015
.XXX ±.005
ANGULAR TOLERANCE
± .5°

OUTSTANDING ECN

NA FINISH

BREAK SHARP EDGES
MAX. XX MIN. XX

Q.A. CATEGORY A-3		DATE
DRAWN BY	Ed Koropsak	1/5/99
CHECKED BY		
DESIGN APPROVAL		
ENGINEER APPROVAL	R.MICHNOFF	1/5/99
SUPVR. APPROVAL		

NEXT ASSEMBLY

BROOKHAVEN NATIONAL LABORATORY
UPTON, N.Y. 11973

RHIC CONTROLS WIRING DIAGRAM
BLDG. 1004B, CFE-4B-PS3
RTDL INPUTS rampvar,spare7 & 8

SIZE D
DRAWING NUMBER 94028529
REV. A

MATERIAL: ——— SCALE: NA WEIGHT: – SHEET 104 /108

*AUTOCAD

REV.	ZONE	ECN NO.	DATE	BY	CKR	APP.

ACS, BNL 1/28/00 3:00 PM 8529_105.dwg

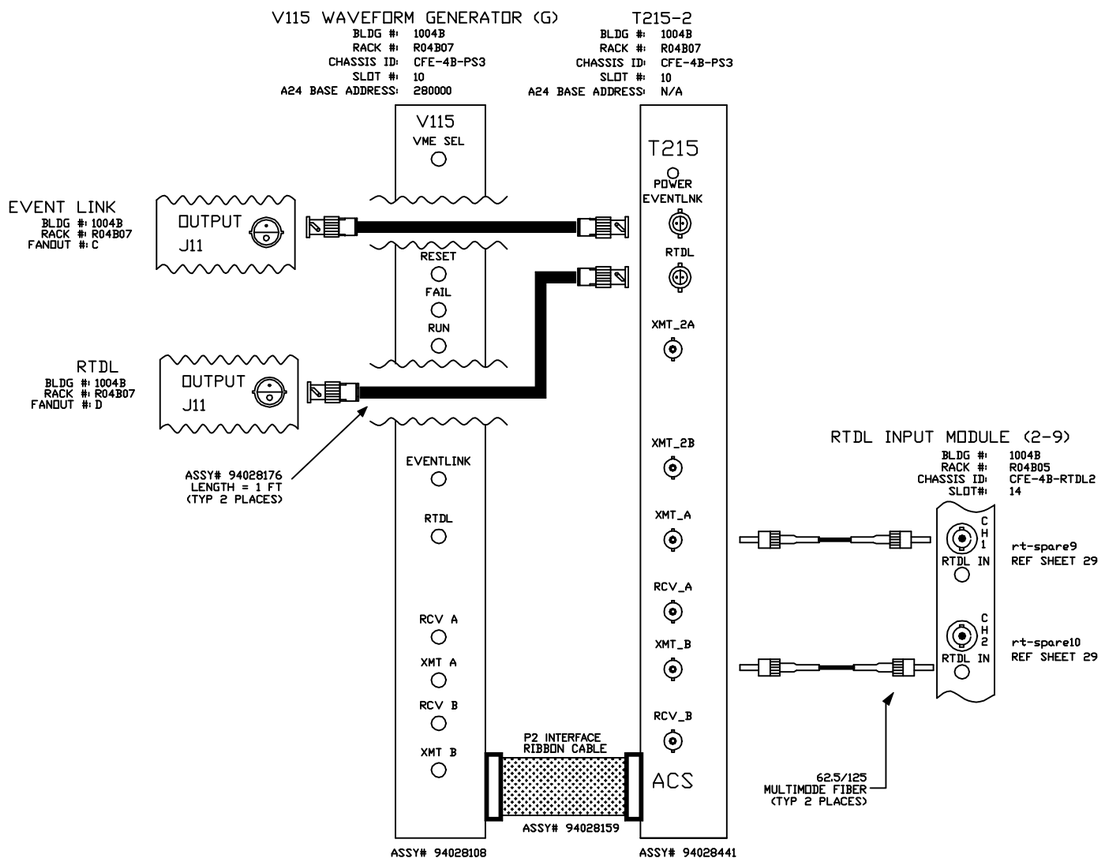

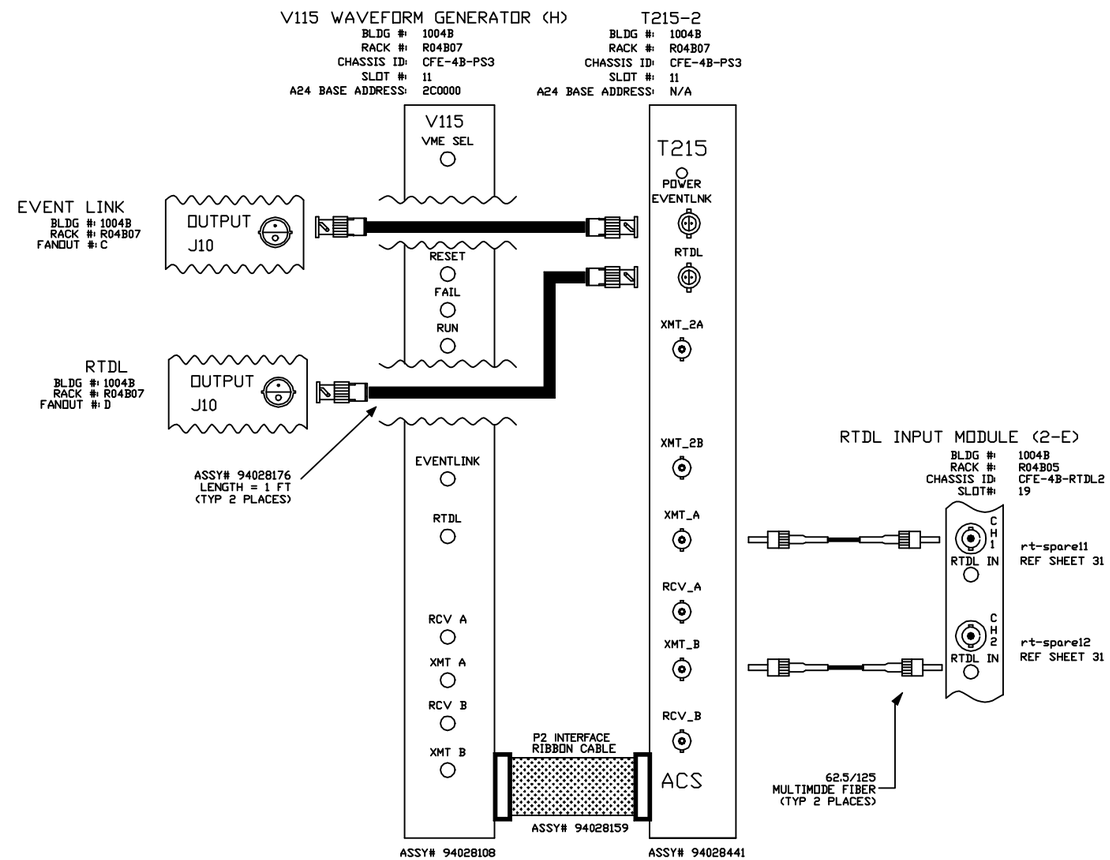

V115 JUMPER LIST

JP3=IN
JP4=IN
JP1=OUT
JP2=OUT

A24 BASE ADDRESS
JB1-A23=IN
JB1-A22=IN
JB1-A21=OUT
JB1-A20=IN
JB1-A19=OUT
JB1-A18=IN

V115 JUMPER LIST

JP3=IN
JP4=IN
JP1=OUT
JP2=OUT

A24 BASE ADDRESS
JB1-A23=IN
JB1-A22=IN
JB1-A21=OUT
JB1-A20=IN
JB1-A19=OUT
JB1-A18=OUT

-3	-2	-1	REF DESIGNATOR	ITEM NO.	DESCRIPTION	MAT'L DWG NO./BNL NO.
QTY REQD						

INTERPRET IN GENERAL ACCORDANCE WITH ASME Y14.24M-1989

UNLESS OTHERWISE SPECIFIED DIMENSIONS ARE IN INCHES

DECIMAL TOLERANCES
.X ±.030
.XX ±.015
.XXX ±.005
ANGULAR TOLERANCE
± .5°

OUTSTANDING ECN

NA FINISH

BREAK SHARP EDGES
MAX. XX MIN. XX

Q.A. CATEGORY A-3

		DATE
DRAWN BY	Ed Koropsak	8/2799
CHECKED BY		
DESIGN APPROVAL		
ENGINEER APPROVAL	R.MICHNOFF	8/27/99
SUPVR. APPROVAL		

NEXT ASSEMBLY

BROOKHAVEN NATIONAL LABORATORY
UPTON, N.Y. 11973

RHIC CONTROLS WIRING DIAGRAM
BLDG. 1004B, CFE-4B-PS3
RTDL INPUTS spare9, 10, 11 & 12

SIZE D
94028529
DRAWING NUMBER
REV. A

MATERIAL: ——— SCALE: NA WEIGHT: – SHEET 105/108

1 *AUTOCAD

REV.	ZONE	ECN NO.	DATE	BY	CKR	APP.

ACS, BNL 1/28/00 3:21 PM 8529_106.dwg

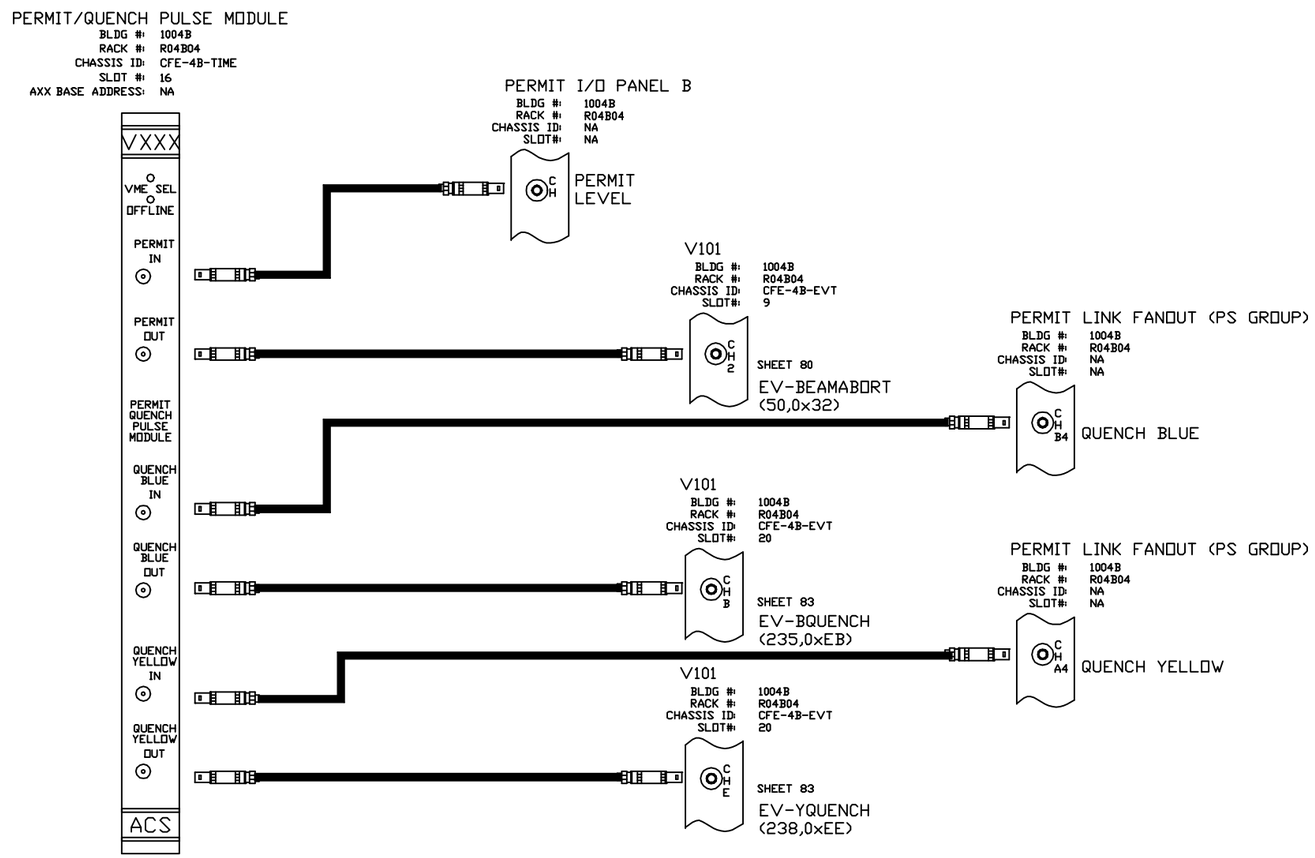

-3	-2	-1	REF DESIGNATOR	ITEM NO.	DESCRIPTION	MAT'L DWG NO./DWG. NO.
QTY REQD						

INTERPRET IN GENERAL ACCORDANCE WITH ASME Y14.24M-1989

UNLESS OTHERWISE SPECIFIED DIMENSIONS ARE IN INCHES

DECIMAL TOLERANCES
.X ±.030
.XX ±.015
.XXX ±.005
ANGULAR TOLERANCE ± .5°

OUTSTANDING ECN

NA FINISH

BREAK SHARP EDGES
MAX. XX MIN. XX

Q.A. CATEGORY A-3		DATE
DRAWN BY	Ed Koropsak	9/7/99
CHECKED BY		
DESIGN APPROVAL		
ENGINEER APPROVAL	R. MICHNOFF	9/7/99
SUPVR. APPROVAL		

NEXT ASSEMBLY

BROOKHAVEN NATIONAL LABORATORY
UPTON, N.Y. 11973

RHIC CONTROLS WIRING DIAGRAM

BLDG. 1004B, RACK R04B04

QUENCH/PERMIT DETECT CIRCUIT

SIZE D | DRAWING NUMBER 94028529 | REV. A

MATERIAL: ——— SCALE: NA WEIGHT: – SHEET 106 /108

1 *AUTOCAD

REV.	ZONE	ECN NO.	DATE	BY	CKR	APP.

ACS, BNL 1/28/00 3:31 PM 8529_107.dwg

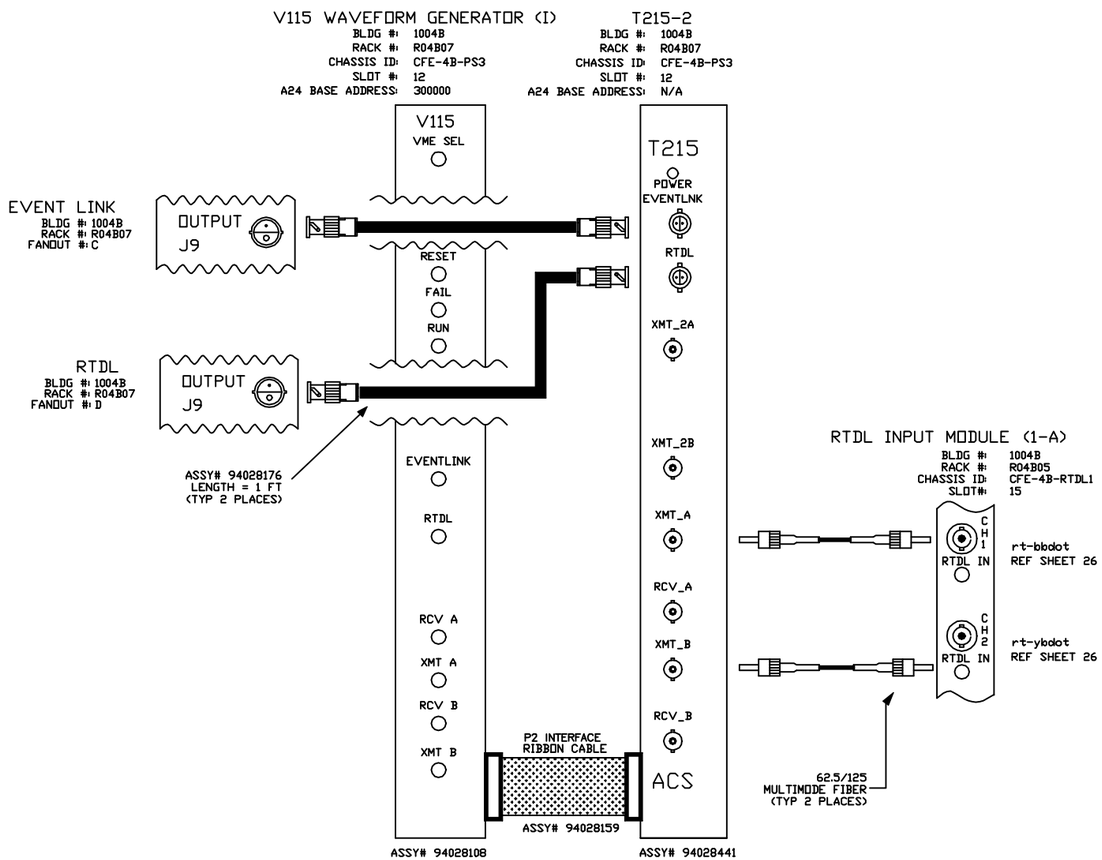

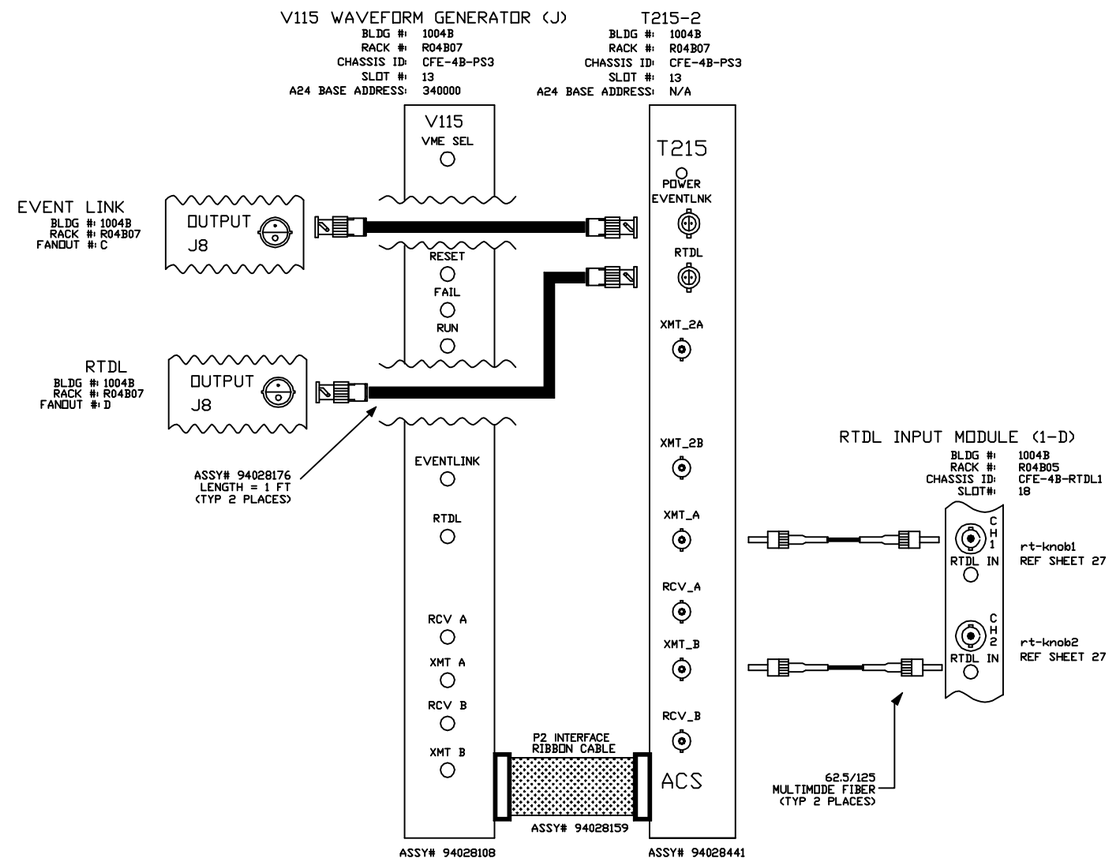

V115 JUMPER LIST
JP3=IN JP4=IN JP1=OUT JP2=OUT
A24 BASE ADDRESS JB1-A23=IN JB1-A22=IN JB1-A21=OUT JB1-A20=OUT JB1-A19=IN JB1-A18=IN

V115 JUMPER LIST
JP3=IN JP4=IN JP1=OUT JP2=OUT
A24 BASE ADDRESS JB1-A23=IN JB1-A22=IN JB1-A21=OUT JB1-A20=OUT JB1-A19=IN JB1-A18=OUT

-3	-2	-1	REF DESIGNATOR	ITEM NO.	DESCRIPTION	MAT'L. DWG NO./PART NO.
QTY REQD						

INTERPRET IN GENERAL ACCORDANCE WITH ASME Y14.24M-1989

UNLESS OTHERWISE SPECIFIED DIMENSIONS ARE IN INCHES

DECIMAL TOLERANCES
.X ±.030
.XX ±.015
.XXX ±.005
ANGULAR TOLERANCE
± .5°

OUTSTANDING ECN

NA FINISH

BREAK SHARP EDGES
MAX. XX MIN. XX

Q.A. CATEGORY A-3		DATE
DRAWN BY	Ed Koropsak	8/27/99
CHECKED BY		
DESIGN APPROVAL		
ENGINEER APPROVAL	R.MICHNOFF	8/27/99
SUPVR. APPROVAL		

NEXT ASSEMBLY

BROOKHAVEN NATIONAL LABORATORY
UPTON, N.Y. 11973

RHIC CONTROLS WIRING DIAGRAM
BLDG. 1004B, CFE-4B-PS3

RTDL INPUTS y&b bdot,knob1&2

SIZE D | DRAWING NUMBER 94028529 | REV. A

MATERIAL: ——— SCALE: NA WEIGHT: – SHEET 107/108

1 *AUTOCAD

ACS, BNL 2/10/00 1:58 PM 8529_108.dwg

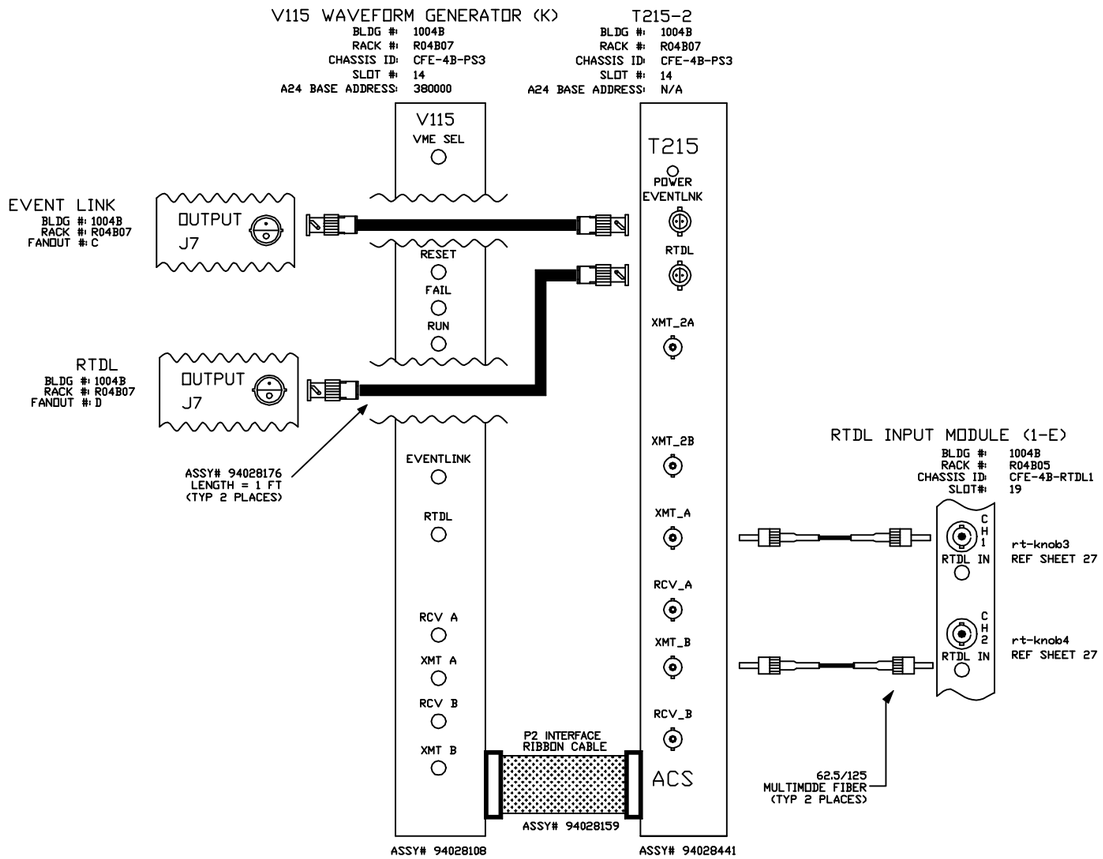

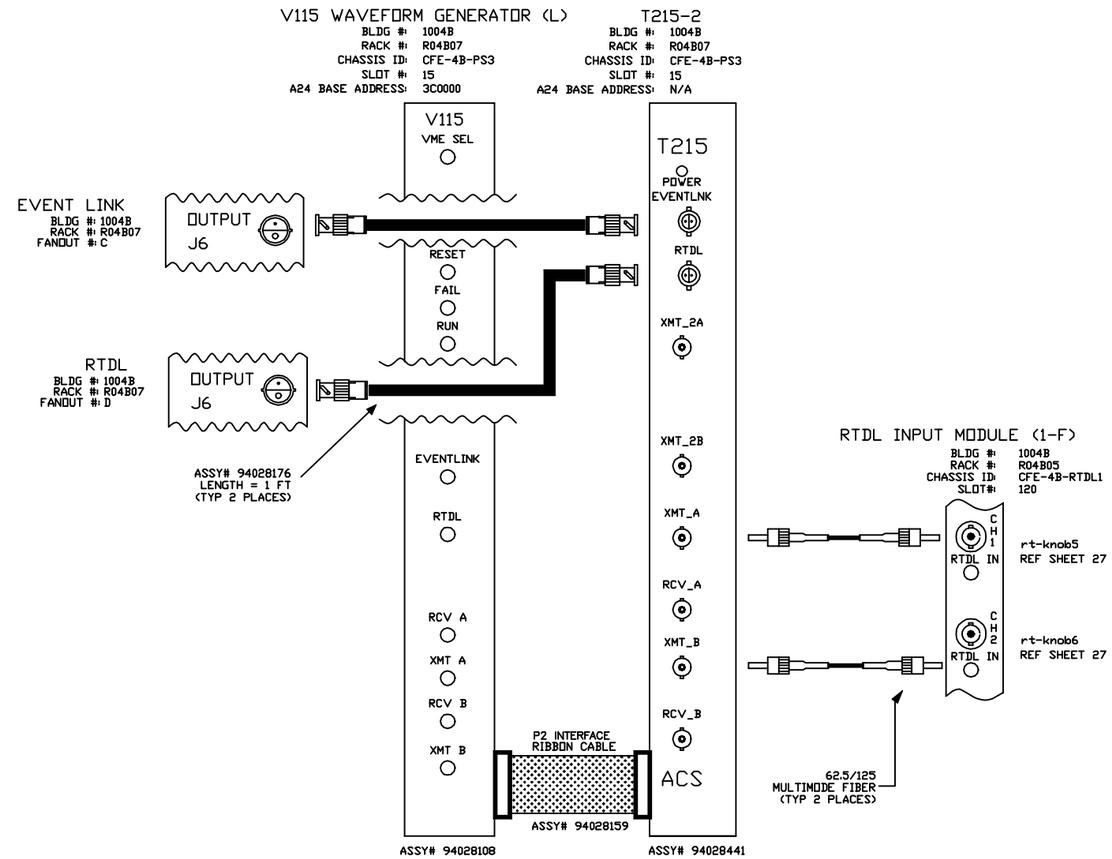

V115 JUMPER LIST
JP3=IN JP4=IN JP1=OUT JP2=OUT
A24 BASE ADDRESS JB1-A23=IN JB1-A22=IN JB1-A21=OUT JB1-A20=OUT JB1-A19=OUT JB1-A18=IN

V115 JUMPER LIST
JP3=IN JP4=IN JP1=OUT JP2=OUT
A24 BASE ADDRESS JB1-A23=IN JB1-A22=IN JB1-A21=OUT JB1-A20=OUT JB1-A19=OUT JB1-A18=OUT

-3	-2	-1	REF DESIGNATOR	ITEM NO.	DESCRIPTION	MAT'L DWG NO./BNL NO.
QTY REQD						

INTERPRET IN GENERAL ACCORDANCE WITH ASME Y14.24M-1989

UNLESS OTHERWISE SPECIFIED DIMENSIONS ARE IN INCHES

DECIMAL TOLERANCES .X ±.030 .XX ±.015 .XXX ±.005

ANGULAR TOLERANCE ± .5°

OUTSTANDING ECN

NA FINISH

BREAK SHARP EDGES MAX. XX MIN. XX

Q.A. CATEGORY A-3		DATE
DRAWN BY	Ed Koropsak	8/27/99
CHECKED BY		
DESIGN APPROVAL		
ENGINEER APPROVAL	R.MICHNOFF	8/27/99
SUPVR. APPROVAL		

NEXT ASSEMBLY

BROOKHAVEN NATIONAL LABORATORY
UPTON, N.Y. 11973

RHIC CONTROLS WIRING DIAGRAM

BLDG. 1004B, CFE-4B-PS3

RTDL INPUTS knob 3 ,4,5 & 6

SIZE D — DRAWING NUMBER 94028529 — REV. A

MATERIAL: ——— SCALE: NA WEIGHT: – SHEET 108/109

1 *AUTOCAD

REV.	ZONE	ECN NO.	DATE	BY	CKR	APP.

BNL, BNL 8/17/00 2:26 PM 8529_109.dwg

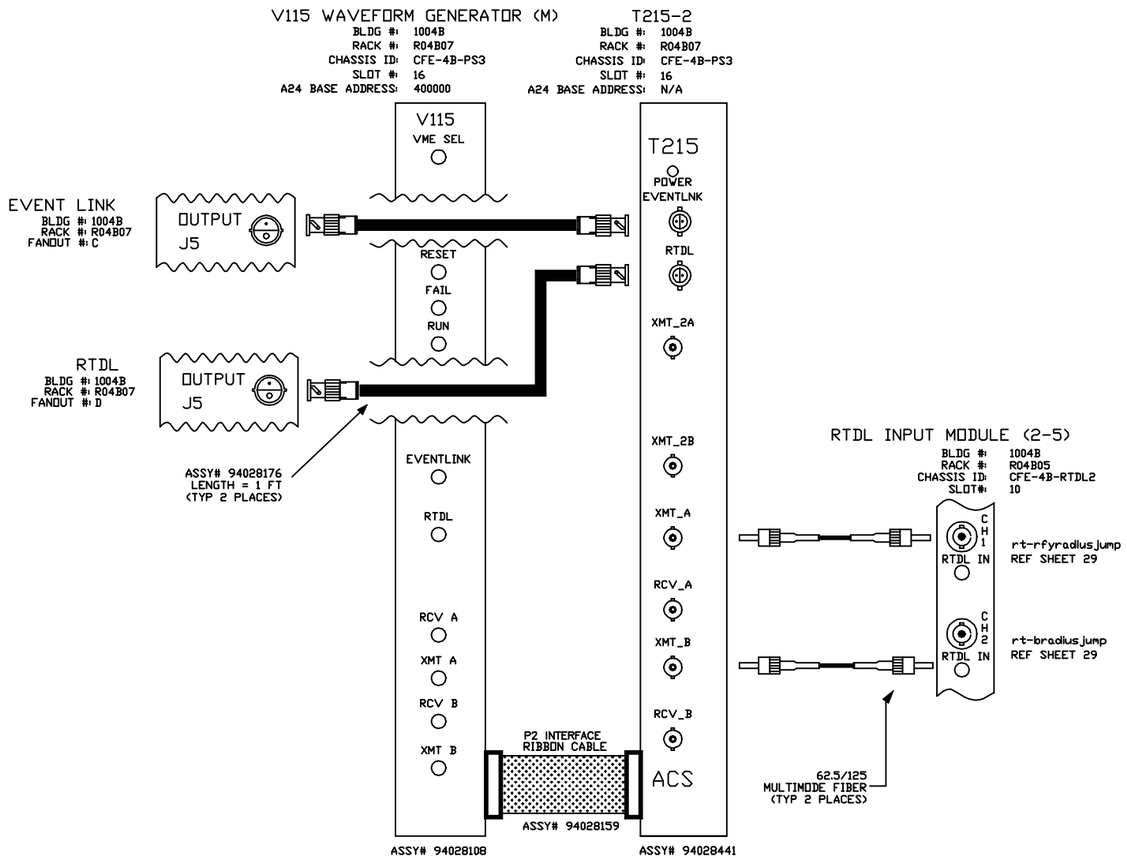

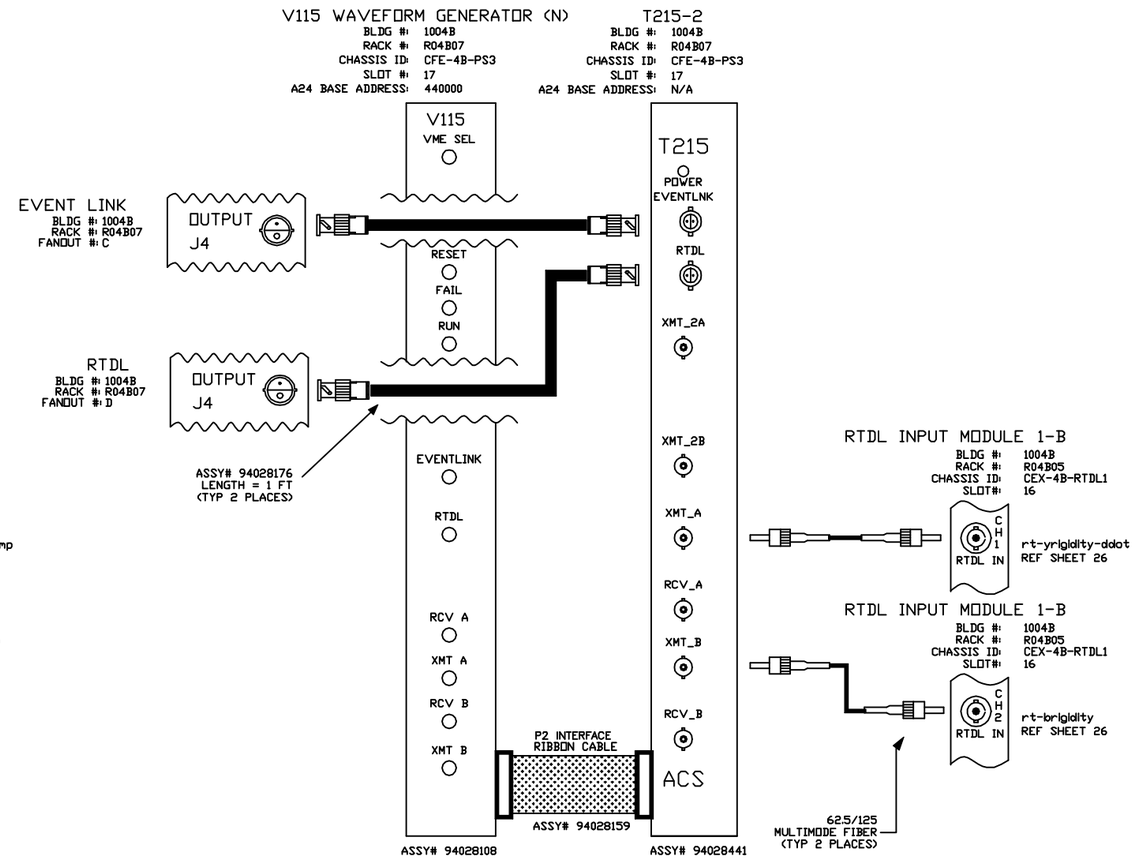

V115 JUMPER LIST
JP3=IN JP4=IN JP1=OUT JP2=OUT
A24 BASE ADDRESS JB1-A23=IN JB1-A22=OUT JB1-A21=IN JB1-A20=IN JB1-A19=IN JB1-A18=IN

V115 JUMPER LIST
JP3=IN JP4=IN JP1=OUT JP2=OUT
A24 BASE ADDRESS JB1-A23=IN JB1-A22=OUT JB1-A21=IN JB1-A20=IN JB1-A19=IN JB1-A18=OUT

-3	-2	-1	REF DESIGNATOR	ITEM NO.	DESCRIPTION	MAT'L DWG NO./BNL NO.
QTY REQD						

INTERPRET IN GENERAL ACCORDANCE WITH ASME Y14.24M-1989

UNLESS OTHERWISE SPECIFIED DIMENSIONS ARE IN INCHES

DECIMAL TOLERANCES
.X ±.030
.XX ±.015
.XXX ±.005
ANGULAR TOLERANCE ± .5°

OUTSTANDING ECN

NA FINISH

BREAK SHARP EDGES MAX. XX MIN. XX

Q.A. CATEGORY A-3		DATE	BROOKHAVEN NATIONAL LABORATORY
DRAWN BY	Ed Koropsak	2/10/00	UPTON, N.Y. 11973
CHECKED BY			RHIC CONTROLS WIRING DIAGRAM
DESIGN APPROVAL			BLDG. 1004B, CFE-4B-PS3
ENGINEER APPROVAL	R.MICHNOFF	2/10/00	RTDL INPUTS y & b radiusjump
SUPVR. APPROVAL			SIZE D — 94028529 — REV. A
NEXT ASSEMBLY			DRAWING NUMBER

MATERIAL: ——— SCALE: NA WEIGHT: – SHEET 109

*AUTOCAD

REV.	ZONE	ECN NO.	DATE	BY	CKR	APP.

BNL, BNL 5/9/00 11:22 AM 8529_110.dwg

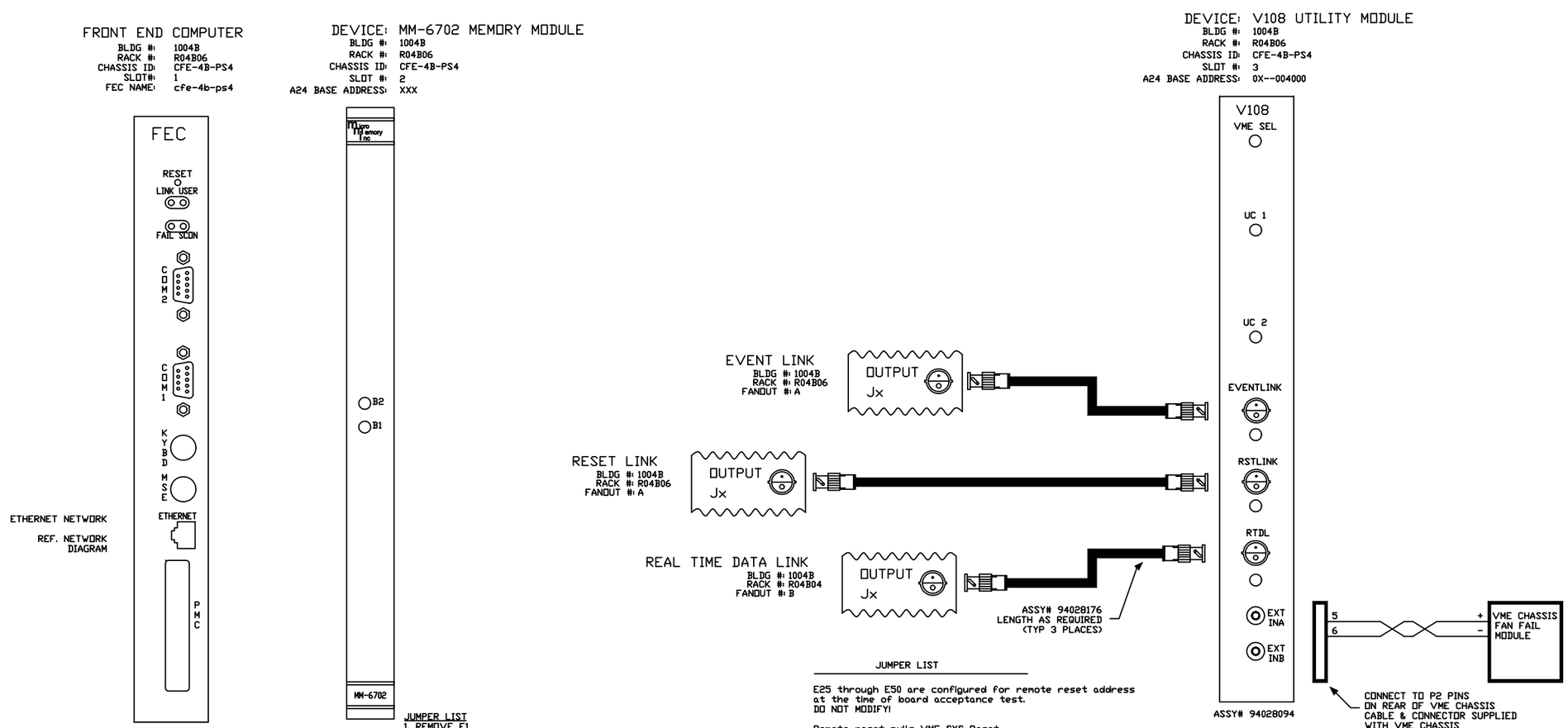

JUMPER LIST

1. REMOVE E1.
2. INSTALL E15.
3. SW3 CLOSE ALL POSITIONS.
4. SW2 CLOSE POSITIONS 7 AND 8.
5. SW1 CLOSE POSITIONS 2-8.
6. INSTALL E14 AND E25 TO ENABLE BATTERIES

JUMPER LIST

E25 through E50 are configured for remote reset address at the time of board acceptance test.
DO NOT MODIFY!

Remote reset pulls VME SYS Reset.
E58-E60, E59-E61

A24 BASE ADDRESS= 4000h
E57-E13, E2-E14, E3-E15, E4-E16, E5-E17, E6-E18
E7-E19, E8-E20, E9-E21, E10-E22, E11-E24, E57-E23
SW1=OPEN
SW2=CLOSED
SW3=OPEN
SW4=OPEN

-3	-2	-1	REF DESIGNATOR	ITEM NO.	DESCRIPTION	MAT'L. DWG NO.,BNL NO.
QTY REQD						

INTERPRET IN GENERAL ACCORDANCE WITH ASME Y14.24M-1989

UNLESS OTHERWISE SPECIFIED DIMENSIONS ARE IN INCHES
DECIMAL TOLERANCES
.X ±.030
.XX ±.015
.XXX ±.005
ANGULAR TOLERANCE
± .5°

NA FINISH
BREAK SHARP EDGES
MAX. XX MIN. XX

OUTSTANDING ECN

Q.A. CATEGORY A-3		DATE
DRAWN BY	Ed Koropsak	5/9/00
CHECKED BY		
DESIGN APPROVAL		
ENGINEER APPROVAL	R. MICHNOFF	5/9/00
SUPVR. APPROVAL		

NEXT ASSEMBLY

BROOKHAVEN NATIONAL LABORATORY
UPTON, N.Y. 11973

RHIC CONTROLS WIRING DIAGRAM
1004B, VME CHASSIS CFE-4B-PS4
FT END COMP/V108 UTIL MODULE

SIZE D
94028529
DRAWING NUMBER
REV. A

MATERIAL: ——— SCALE: NA WEIGHT: – SHEET 110

*AUTOCAD

REV.	ZONE	ECN NO.	DATE	BY	CKR	APP.

BNL, BNL 5/9/00 11:25 AM 8529_111.dwg

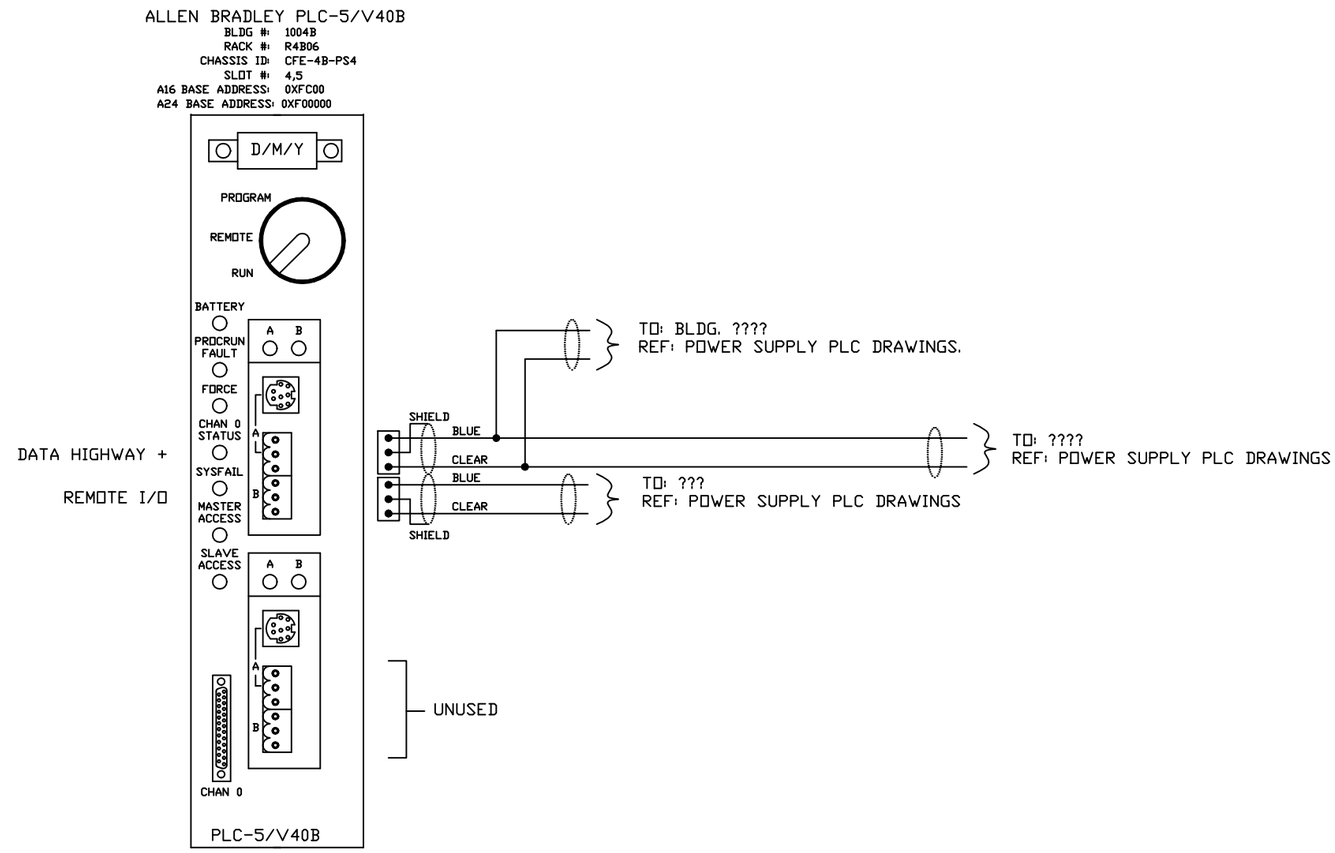

-3	-2	-1	REF DESIGNATOR	ITEM NO.	DESCRIPTION	MAT'L DWG NO./INL NO.
QTY REQD						

INTERPRET IN GENERAL ACCORDANCE WITH ASME Y14.24M-1989

UNLESS OTHERWISE SPECIFIED DIMENSIONS ARE IN INCHES

DECIMAL TOLERANCES
.X ±.030
.XX ±.015
.XXX ±.005
ANGULAR TOLERANCE
± .5°

NA FINISH

BREAK SHARP EDGES
MAX. XX MIN. XX

OUTSTANDING ECN

Q.A. CATEGORY A-3		DATE
DRAWN BY	Ed Koropsak	5/9/00
CHECKED BY		
DESIGN APPROVAL		
ENGINEER APPROVAL	R. MICHNOFF	5/9/00
SUPVR. APPROVAL		

NEXT ASSEMBLY

BROOKHAVEN NATIONAL LABORATORY
UPTON, N.Y. 11973

RHIC CONTROLS WIRING DIAGRAM

BLDG. 1004B, VME CHASSIS CFE-4B-PS4

ALLEN BRADLEY VME PLC-5

SIZE D | DRAWING NUMBER 94028529 | REV. A

MATERIAL: ——— SCALE: NA WEIGHT: – SHEET 111

*AUTOCAD